OMRON

Safety Light Curtain

F3SJ-A□□□□P□□ Series (Version 2)

User's Manual

Cat. No. SCHG-718U

Original instructions

Introduction

Thank you for purchasing the F3SJ Series Safety Light Curtain (hereinafter referred to as the "F3SJ").
This is the instruction Manual describing the use of F3SJ.
Always heed the following points when using the F3SJ:

- Be sure to have F3SJ be handled by a "Responsible Person" who is well aware of and familiar with the machine to be installed.
- The term "Responsible Person" used in this Instruction Manual means the person qualified, authorized and responsible to secure "safety" in each process of the design, installation, operation, maintenance services and disposition of the machine.
- It is assumed that F3SJ will be used properly according to the installation environment, performance and function of the machine. Responsible Person should conduct risk assessment on the machine and determine the suitability of this product before installation.
- Read this Manual thoroughly to understand and make good use of the descriptions before installing and operating the product.
- Keep this Manual at the place where the operator can refer to whenever necessary.

Legislation and Standards

1. Application of a F3SJ-A sensor alone cannot receive type approval provided by Article 44-2 of the Labour Safety and Health Law of Japan. It is necessary to apply it in a system. Therefore, when using the F3SJ-A in Japan as a "safety system for pressing or shearing machines" prescribed in Article 42 of that law, the system must receive type approval.
2. The F3SJ-A is electro-sensitive protective equipment (ESPE) in accordance with European Union (EU) Machinery Regulation Index Annex II, Item 2
3. EC Declaration of Conformity
   OMRON declares that the F3SJ-A is in conformity with the requirements of the following EU Regulations and EC Directives:
   Machinery Regulation (EU) 2023/1230
   EMC Directive 2014/30/EU
4. The F3SJ-A is in conformity with the following standards:
   (1) European standards
   EN61496-1 (Type 4 ESPE), EN 61496-2 (Type 4 AOPD), EN61508-1 through -3 (SIL3),
   EN ISO 13849-1 (Category 4, PL e)
   (2) International standards
   IEC61496-1 (Type 4 ESPE), IEC61496-2 (Type 4 AOPD), IEC61508-1 through -3 (SIL3),
   ISO 13849-1 (Category 4, PL e)
   (3)JIS standards
   JIS B 9704-1 (Type 4 ESPE), JIS B 9704-2 (Type 4 AOPD)
   (4) North American Standards:
   UL61496-1(Type 4 ESPE), UL61496-2(Type 4 AOPD), UL508, UL1998, CAN/CSA C22.2 No.14,
   CAN/CSA C22.2 No.0.8
5. The F3SJ-A received the following approvals from the EU accredited body, TÜV SÜD Product Service GmbH:
   - EC Type-Examination in accordance with the EU Machinery Regulation, Type 4 ESPE (EN61496-1), Type 4 AOPD (EN 61496-2)
   - TÜV SÜD Product Service GmbH Type Approval, Type 4 ESPE (EN61496-1), Type 4 AOPD (EN 61496-2), SIL1, 2, 3 (EN 61508-1 through -3), EN ISO 13849-1 (Category 4, PL e)
6. The F3SJ-A received the certificates of UL listing for US and Canadian safety standards from the Third Party Assessment Body UL.
   - Both are: Type 4 ESPE (UL61496-1), Type 4 AOPD (UL61496-2)
7. The F3SJ-A is designed according to the standards listed below. To make sure that the final system complies with the following standards and regulations, you are asked to design and use it in accordance with all other related standards, laws, and regulations. If you have any questions, consult with specialized organizations such as the body responsible for prescribing and/or enforcing machinery safety regulations in the location where the equipment is to be used.
   - European Standards: EN415-4, EN692, EN693
   - U.S. Occupational Safety and Health Standards: OSHA 29 CFR 1910.212
   - U.S. Occupational Safety and Health Standards: OSHA 29 CFR 1910.217
   - American National Standards: ANSI B11.1 to B11.19
   - American National Standards: ANSI/RIA 15.06
   - Canadian Standards Association CSA Z142, Z432, Z434
   - SEMI Standards SEMI S2
   - Ministry of Health, Labour and Welfare "Guidelines for Comprehensive Safety Standards of Machinery", Standard Bureau's Notification No. 501 dated June 1, 2001.
8. We have obtained S-Mark Certification from Legislation and Standards Korea Occupational Safety & Health Agency (KOSHA).
   (F3SJ-A□□□□P□□-S series only)

Terms and Conditions Agreement

Read and understand this catalog.

Please read and understand this catalog before purchasing the products. Please consult your OMRON representative if you have any questions or comments.

Warranties.

(a) Exclusive Warranty. Omron's exclusive warranty is that the Products will be free from defects in materials and workmanship for a period of twelve months from the date of sale by Omron (or such other period expressed in writing by Omron). Omron disclaims all other warranties, express or implied.

(b) Limitations. OMRON MAKES NO WARRANTY OR REPRESENTATION, EXPRESS OR IMPLIED, ABOUT NON-INFRINGEMENT, MERCHANTABILITY OR FITNESS FOR A PARTICULAR PURPOSE OF THE PRODUCTS. BUYER ACKNOWLEDGES THAT IT ALONE HAS DETERMINED THAT THE PRODUCTS WILL SUITABLY MEET THE REQUIREMENTS OF THEIR INTENDED USE.

Omron further disclaims all warranties and responsibility of any type for claims or expenses based on infringement by the Products or otherwise of any intellectual property right. (c) Buyer Remedy. Omron's sole obligation hereunder shall be, at Omron's election, to (i) replace (in the form originally shipped with Buyer responsible for labor charges for removal or replacement thereof) the non-complying Product, (ii) repair the non-complying Product, or (iii) repay or credit Buyer an amount equal to the purchase price of the non-complying Product; provided that in no event shall Omron be responsible for warranty, repair, indemnity or any other claims or expenses regarding the Products unless Omron's analysis confirms that the Products were properly handled, stored, installed and maintained and not subject to contamination, abuse, misuse or inappropriate modification. Return of any Products by Buyer must be approved in writing by Omron before shipment. Omron Companies shall not be liable for the suitability or unsuitability or the results from the use of Products in combination with any electrical or electronic components, circuits, system assemblies or any other materials or substances or environments. Any advice, recommendations or information given orally or in writing, are not to be construed as an amendment or addition to the above warranty.

See http://www.omron.com/global/ or contact your Omron representative for published information.

Limitation on Liability; Etc.

OMRON COMPANIES SHALL NOT BE LIABLE FOR SPECIAL, INDIRECT, INCIDENTAL, OR CONSEQUENTIAL DAMAGES, LOSS OF PROFITS OR PRODUCTION OR COMMERCIAL LOSS IN ANY WAY CONNECTED WITH THE PRODUCTS, WHETHER SUCH CLAIM IS BASED IN CONTRACT, WARRANTY, NEGLIGENCE OR STRICT LIABILITY.

Further, in no event shall liability of Omron Companies exceed the individual price of the Product on which liability is asserted.

Suitability of Use.

Omron Companies shall not be responsible for conformity with any standards, codes or regulations which apply to the combination of the Product in the Buyer's application or use of the Product. At Buyer's request, Omron will provide applicable third party certification documents identifying ratings and limitations of use which apply to the Product. This information by itself is not sufficient for a complete determination of the suitability of the Product in combination with the end product, machine, system, or other application or use. Buyer shall be solely responsible for determining appropriateness of the particular Product with respect to Buyer's application, product or system. Buyer shall take application responsibility in all cases.

NEVER USE THE PRODUCT FOR AN APPLICATION INVOLVING SERIOUS RISK TO LIFE OR PROPERTY OR IN LARGE QUANTITIES WITHOUT ENSURING THAT THE SYSTEM AS A WHOLE HAS BEEN DESIGNED TO ADDRESS THE RISKS, AND THAT THE OMRON PRODUCT(S) IS PROPERLY RATED AND INSTALLED FOR THE INTENDED USE WITHIN THE OVERALL EQUIPMENT OR SYSTEM.

Programmable Products.

Omron Companies shall not be responsible for the user's programming of a programmable Product, or any consequence thereof.

Performance Data.

Data presented in Omron Company websites, catalogs and other materials is provided as a guide for the user in determining suitability and does not constitute a warranty. It may represent the result of Omron's test conditions, and the user must correlate it to actual application requirements. Actual performance is subject to the Omron's Warranty and Limitations of Liability.

Change in Specifications.

Product specifications and accessories may be changed at any time based on improvements and other reasons. It is our practice to change part numbers when published ratings or features are changed, or when significant construction changes are made. However, some specifications of the Product may be changed without any notice. When in doubt, special part numbers may be assigned to fix or establish key specifications for your application. Please consult with your Omron's representative at any time to confirm actual specifications of purchased Product.

Errors and Omissions.

Information presented by Omron Companies has been checked and is believed to be accurate; however, no responsibility is assumed for clerical, typographical or proofreading errors or omissions.

Precautions on Safety

Regarding the alert symbols and meanings used for the safe uses

In order to use the F3SJ safely, the precautions listed in this manual indicated by alert symbols and descriptions must be followed. Failure to follow all precautions and alerts may result in an unsafe use or operation.

The following indictions and symbols are used for the descriptions.

⚠ WARNING	Indicates a potentially hazardous situation which, if not avoided, will result in minor or moderate injury, or may result in serious injury or death. Additionally there may be significant property damage.

Meanimgs of Alert Symbols

	Indicates prohibited actions.
	Indicates mandatory actions.
	Indicates the risk of electric shock.

Alert Statements in this Manual

For users

⚠ WARNING

The F3SJ must be installed, configured, and incorporated into a machine control system by a sufficiently trained and qualified person. An unqualified person may not be able to perform these operations properly, which may cause a person to go undetected, resulting in serious injury.

When changes are made to each function using the setting tool (F39-GWUM or F39-MC21), the administrator must manage the details of the changes and perform the changes. Accidental functional setting change may cause failure of human body detection, resulting in a serious injury.

For machines

⚠ WARNING

Do not use this sensor for machines that cannot be stopped by electrical control. For example, do not use it for a pressing machine that uses full-rotation clutch. Otherwise, the machine may not stop before a person reaches the hazardous part, resulting in serious injury.

Do not use the auxiliary output or external indicator output for safety applications. Human body may not be detected when F3SJ fails, resulting in serious injury.

For installation

⚠ WARNING

An actual performance is different according to the state of the installation, the user environment, and the application. Make sure to test the operation of the F3SJ after installation to verify that the F3SJ operates as intended. Make sure to stop the machine until the test is complete. Unintended function settings may cause a person to go undetected, resulting in serious injury.

Make sure to install the F3SJ at the safe distance from the hazardous part of the equipment. Otherwise, the machine may not stop before a person reaches the hazardous part, resulting in serious injury.

Install a protective structure so that the hazardous part of a machine can only be reached by a person that passes through the sensor's detection zone. Install the sensors so that part of the person is always present in the detection zone when working in a machine's hazardous zones. If a person is able step into the hazardous zone of a machine and remain behind the F3SJ's detection zone, configure the system with an interlock function that prevents the machine from being restarted. Failure to do so may result in serious injury.

Install the interlock reset switch in a location that provides a clear view of the entire hazardous zone and where it cannot be activated from within the hazardous zone.

The F3SJ cannot protect a person from a projectile exiting the hazardous zone. Install protective cover(s) or fence(s).

To prevent personnel approach to dangerous part of the machine through an zone disabled by the fixed blanking function, you must install a protective structure to cover the whole disabled zone. Failure to do so may cause failure of human body detection, resulting in a serious injury.

You must ensure that a test rod is detected for all detection zones except where fixed or floating blanking function is used. Failure to do so may cause failure of human body detection, resulting in a serious injury.

Detection capability gets larger when fixed/floating blanking function is used. You must use the detection capability for fixed and floating blanking functions. Failure to do so may cause failure of machine stop before reaching the machine's dangerous part, resulting in a serious injury.

You must ensure that the system works as you intended after configuring floating blanking. Failure to do so may result in serious injury.

Warning zone output is non-safety output. You must not include it to calculation of safety distance.Otherwise safety distance may be reduced, resulting in serious injury.

A warning zone CANNOT be used for safety applications. Always install your system so that a detection zone should be passed before reaching a source of danger.

The muting and override functions disable the safety functions of the device. You must ensure safety using other method when these functions are operating.

Install muting sensors so that they can distinguish between the object that is being allowed to pass through the detection zone and a person. If the muting function is activated by the detection of a person, it may result in serious injury.

Muting lamps (external indicators) that indicate the state of the muting and override functions must be installed where they are clearly visible to workers from all the operating positions.

Muting related time must be properly configured for its application by a sufficiently trained and qualified person, and the person must have responsibility for settings, especially when setting the muting time limit to infinite.

Use independent 2 input devices for muting inputs.

You must install F3SJ, muting sensor, and physical barrier, and configure time settings for muting so that an operator should not enter hazardous zone.

Install the switch that activates the override and that uses hold-to-run device, such as spring-return key switch, in a location that provides a clear view of the entire hazardous zone and where it cannot be activated from within the hazardous zone. Make sure that nobody is in the hazardous zone before activating the override function.

Install the sensor system so that it is not affected by the reflective surface of the F3SJ.

When using more than 1 set of F3SJ, install them so that mutual interference does not occur, such as by configuring series connections or using physical barriers between adjacent sets.

Make sure that the F3SJ is securely mounted and its cables and connectors are properly secured.

Make sure that foreign material such as water, oil, or dust does not enter the F3SJ or the connector while the cap is removed.

Do not use the sensor system with mirrors in a retro-reflective configuration as shown below.Doing so may hinder detection. It is possible to use mirrors to "bend" the detection zone to a 90-degree angle.

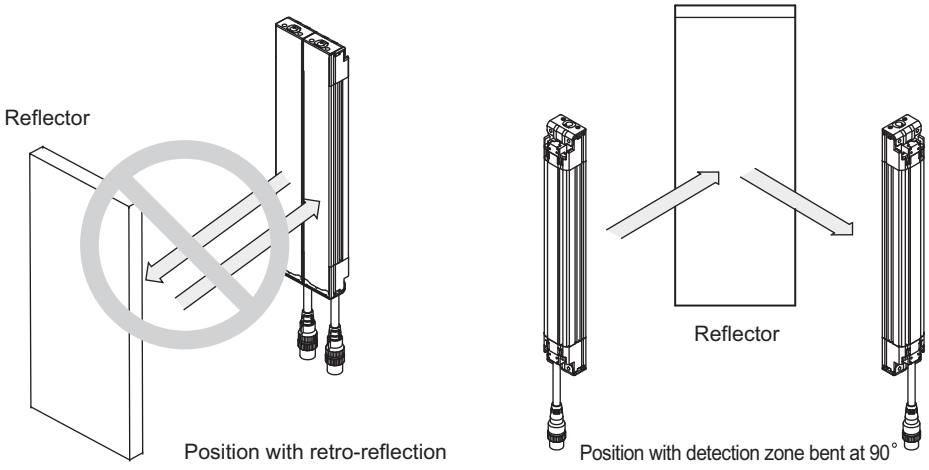

Perform an inspection for all F3SJ as described in "Chapter 6 Checklists". When using series connections, perform inspections for every connected F3SJ.

For wiring

⚠ WARNING

Connect the load between the output and 0V line (PNP output). Connecting the load between the output and +24V line will result in a dangerous condition because operation is reversed to "ON when blocked".

Do not short-circuit the output line to the +24V line. Otherwise, the output is always ON. Also, the 0V of the power supply must be grounded so that output does not turn ON due to grounding of the output line.

Configure the system by using the optimal number of safety outputs that satisfy the requirements of the necessary safety category.

Do not connect each line of F3SJ to a DC power supply of more than 24VDC+20%. Also, do not connect to an AC power supply. Failure to do so may result in electric shock.

For the F3SJ to comply with IEC 61496-1 and UL 508, the DC power supply unit must satisfy all of the following conditions:

- Must be within the rated power voltage (24V DC ± 20%)
- Must have tolerance against the total rated current of devices if it is connected to multiple devices
- Must comply with EMC directives (industrial environment)
- Double or reinforced insulation must be applied between the primary and secondary circuits
- Automatic recovery of overcurrent protection characteristics (reversed L sagging)
- Output holding time must be 20ms or longer
- Must satisfy output characteristic requirements for class 2 circuit or limited voltage current circuit defined by UL508. Refer to p.158 for details.
- Must comply with laws and regulations, regarding EMC and electrical equipment safety, of the country or region where the F3SJ is used (Ex: In EU, the power supply must comply with the EMC Directive and the Low Voltage Directive.)

Double or reinforced insulation from hazardous voltage must be applied to all input and output lines. Failure to do so may result in electric shock.

Extension of the cable must be within a specified length. If it isn't, safety function may not work properly, resulting in danger.

Security Measures

⚠ WARNING

Anti-virus protection
Install the latest commercial-quality antivirus software on the computer connected to the control system and maintain to keep the software up-to-date.

Security measures to prevent unauthorized access
Take the following measures to prevent unauthorized access to our products.

- Install physical controls so that only authorized personnel can access control systems and equipment.
- Reduce connections to control systems and equipment via networks to prevent access from untrusted devices.
- Install firewalls to shut down unused communications ports and limit communications hosts and isolate control systems and equipment from the IT network.
- Use a virtual private network (VPN) for remote access to control systems and equipment.
- Adopt multifactor authentication to devices with remote access to control systems and equipment.
- Set strong passwords and change them frequently.
- Scan virus to ensure safety of USB drives or other external storages before connecting them to control systems and equipment.

Data input and output protection
Validate backups and ranges to cope with unintentional modification of input/output data to control systems and equipment.

- Checking the scope of data
- Checking validity of backups and preparing data for restore in case of falsification and abnormalities
- Safety design, such as emergency shutdown and fail-soft operation in case of data tampering and abnormalities

Data recovery
Backup data and keep the data up-to-date periodically to prepare for data loss.

When using an intranet environment through a global address, connecting to an unauthorized terminal such as a SCADA, HMI or to an unauthorized server may result in network security issues such as spoofing and tampering.
You must take sufficient measures such as restricting access to the terminal, using a terminal equipped with a secure function, and locking the installation area by yourself.

When constructing an intranet, communication failure may occur due to cable disconnection or the influence of unauthorized network equipment.
Take adequate measures, such as restricting physical access to network devices, by means such as locking the installation area.

When using a device equipped with the SD Memory Card function, there is a security risk that a third party may acquire, alter, or replace the files and data in the removable media by removing the removable media or unmounting the removable media.
Please take sufficient measures, such as restricting physical access to the Controller or taking appropriate management measures for removable media, by means of locking the installation area, entrance management, etc., by yourself.

To prevent computer viruses, install antivirus software on a computer where you use this software.
Make sure to keep the antivirus software updated.

Keep your computer's OS updated to avoid security risks caused by a vulnerability in the OS.

Always use the highest version of this software to add new features, increase operability, and enhance security.

Manage usernames and passwords carefully to protect them from unauthorized uses.

Set up a firewall (E.g., disabling unused communication ports, limiting communication hosts, etc.) on a network for a control system and devices to separate them from other IT networks. Make sure to connect to the control system inside the firewall.

Use a virtual private network (VPN) for remote access to a control system and devices.

Record the execution date and details when changing the settings of the F3SJ, and keep the records for five years.

Other

⚠ WARNING

To use the F3SJ in PSDI mode (Reinitiation of cyclic operation by the protective equipment), you must configure an appropriate circuit between the F3SJ and the machine. For details about PSDI, refer to OSHA1910.217, IEC61496-1, and other relevant standards and regulations.

Do not try to disassemble, repair, or modify this product. Doing so may cause the safety functions to stop working properly.

Do not use the F3SJ in environments where flammable or explosive gases are present. Doing so may result in explosion.

Perform daily and 6-month inspections for the F3SJ. Otherwise, the system may fail to work properly, resulting in serious injury.

Precautions for Safe Use

Make sure to observe the following precautions that are necessary for ensuring safe use of the product.

- Thoroughly read this manual and understand the installation procedures, operation check procedures, and maintenance procedures before using the product.
- Loads must satisfy both of the following conditions:
  - -Not short-circuited
  - -Not used with a current that is higher than the rating
- Do not drop the product.
- Dispose of the product in accordance with the relevant rules and regulations of the country or area where the product is used.

Precautions for Correct Use

Observe the precautions described below to prevent operation failure, malfunctions, or undesirable effects on product performance.

■ Installation environment

•Do not install the F3SJ in the following types of environments:
- Areas exposed to intense interference light, such as direct sunlight
- Areas with high humidity where condensation is likely to occur
- Areas where corrosive gases are present
- Areas exposed to vibration or shock levels higher than in the specification provisions
- Areas where the product may come into contact with water
- Areas where the product may get wet with oil that can solve adhesive

•This is a class A product. In residential areas it may cause radio interference, in which case the Responsible Person may be required to take adequate measures to reduce interference.

•Do not use radio equipment such as cellular phones, walkie-talkies, or transceivers near the F3SJ.

•F3SJ can be used at altitudes up to 2,000 meters.

■ Wiring and installation

•Make sure to perform wiring while the power supply is OFF. Otherwise, the F3SJ may fail to operate due to the diagnosis function.

•Do not short-circuit output lines to +24V line. Otherwise a fault of F3SJ may occur.

•When extending the communication line with a cable (twisted-pair wire) other than the dedicated cable (F39-JD□□), use a cable with the same or superior specifications.Connect the shield to the 0V line.

Cable specification (extension cable) p.16

•When replacing the cable connectors with other types of connectors, use connectors that provide a protection grade of IP54 or higher.

•Properly perform the wiring after confirming the signal names of all the terminals.

•Do not operate the control system until 2 seconds or more (2.2 seconds or more in case of series connection) after turning ON the power of the F3SJ.

•Be sure to route the F3SJ cable separate from high-potential power lines or through an exclusive conduit.

•When using a commercially available switching regulator power supply, make sure to ground the FG terminal (frame ground terminal).

- Install the emitter and receiver so that their vertical direction should match.
- If the protective height is 600 mm or more, use intermediate mounting brackets of specified quantities and locations according to the dimensions.
  If the brackets described above are not used, ratings and performance cannot be not met.
- Sharing the power supply with other devices may cause the F3SJ to be affected by noise or voltage drop. It is recommended that this safety component use a dedicated power supply but do not share with other devices.

■ Cleaning

Do not use thinner, benzene, or acetone for cleaning, because they affect the product's resin parts and paint on the case.

■ Object detection

The F3SJ cannot detect transparent and/or translucent objects.

Checking the Contents

Before use, confirm that the items below were shipped with the product.
If you find that an item is missing, please contact your local branch office or distributor.

Product	Quantity
F3SJ-A□□□□P□□ main unit	Emitter x 1, Receiver x 1 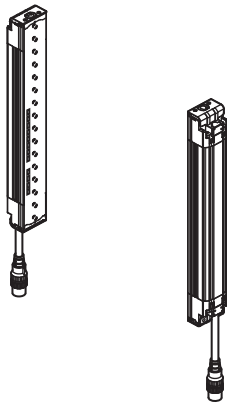
Top/bottom mounting brackets	4 sets 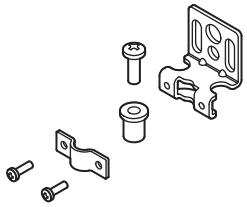
Intermediate mounting brackets	Intermediate brackets are included when the protective height of the F3SJ is 600mm or longer. The number of brackets included depends on the total length of the F3SJ. (4 sets maximum for each emitter/receiver) 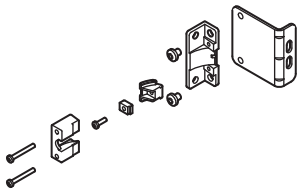
Error mode label	1 (includes Japanese and English)
Instruction sheet	6
Quick installation manual (QIM)	3

How to Read This Manual (Explanation of Symbols)

CHECK!

Indicates the description of an essential point regarding a function, such as an important point regarding operation or advice on how to use it.

Indicates the page number for related content.

Indicates a reference for when there is trouble, or an explanation of difficult words.

Contents

Legislation and Standards i
Terms and Conditions Agreement ii
Precautions on Safety iv
Precautions for Safe Use x
Precautions for Correct Use x
Checking the Contents xii
How to Read This Manual (Explanation of Symbols) xiii

Chapter1 Overview and Specifications 1

Basic Configuration and Names 2
Application Examples 5
Detect the Approach to a Hazardous Zone 5
Using Multiple Sets in Combination 6
For a System in which a Workpiece Crosses Detection Zone (Muting Function) 6
For a System that Has a Machine Within a Detection Zone 7
To Notify a Person of Proximity to a Detection Zone (Warning Zone Function) 8
Features 9
Protective Height Available in Incremental Sizes 9
Easy-to-Read Light Level and Error Mode Display 9
Providing Tools for Setting 9
Additional Safety Functions 9
Enhanced Mutual Interference Prevention 9
Muting/Override Function are Provided 10
Indicator Display Patterns 11
Internal Indicator for Basic System 11
Internal Indicator for Muting System 12
Display Patterns of the Incident Light Level Indicator 13
Ratings 14
Ratings/Specifications 14
Model Name List/Response Times 17
Power Cable Length 19
Compatibility with former version 20

Chapter2 System Configuration and Functions 21

How to Select a System 22
Selection Flow Chart 22
Combination of Functions 22
Basic System 23
Wiring Diagrams 23

Interlock Function 25
External Test Function 27
Self-Test Function 27
Auxiliary Output (Non-Safety Output) 28
Resetting Lockout 29
External Device Monitoring Function 30
Muting System 31
Upgrading F3SJ for Muting System 32
Standard Muting Mode 34
Wiring Diagrams 36
Installation Standard for Muting Sensors 38
Installation Example 1 of Standard Muting Mode (using 2 muting sensors) 38
Installation Example 2 of Standard Muting Mode (using 4 muting sensors) 42
Override Function 48
External Test Function 50
Self-Test Function 50
Auxiliary Output (Non-Safety Output) 51
Resetting Lockout 51
External Device Monitoring Function (EDM) 51

Chapter3 What can be done by the setting tool 53
Using the Setting Tool 54
F3SJ Version 54
List of Functions that Can Be Changed by the Setting Tool 55
Preparation 57
Setting Console 57
PC Tool for F3SJ 57
F3SJ Status When Setting Tool Is Connected 59
Maintenance Status 59
Internal Indicators During Maintenance Status 59
Internal Indicator While Writing/Reading with the Setting Tool 60
Protection of Setting by Password 61
Access Qualification 61
Password Change 61
If You Forget the Password: 61
Setting Adjusted to Application 62
Fixed Blanking Function 62
Floating Blanking Function 66
Warning Zone Function 74
Muting Function 77
Override Function 88

Setting Zone Adjacent Conditions 88
Indicator/Input & Output Setting 91
Auxiliary Output (Non-Safety Output) 91
Designated Beam Output Function 93
External Indicator Output (Non-Safety Output) 95
Interlock Function 96
External Device Monitoring Function 98
Operating Range Change 99
Operating Range Change Function 99
Operation Monitoring 100
Incident Light Level Display 100
Disturbance Light Level Display 100
Status Information Display 101
Maintenance Information 102
Error History 102
Power-on Time 102
Load Switching Frequency 104
Setting Recovery 105
Setting Recovery Function 105
Other 106
Safety Distance Calculation Function 106
Connection Cable Length Calculation Function 106
Rated Response Time Check 106

Chapter4 Wiring/Installation 109
Installation Conditions 110
Detection Zone and Approach 110
Safety Distance 111
Distance from Reflective Surfaces 116
Mutual Interference Prevention 117
Series Connection 120
Connection Procedure 122
Attaching External Indicators 124
Connection Procedure 124
Output Operation 125
Setting Change by the Setting Tool 125
Dimensions 126
When Using Standard Mounting Brackets 126
When Using Optional Mounting Brackets 129
F39-A01Po-PAC External Indicator Set 146
When Using Spatter Protection Covers 146

Setting Tool 147
Mounting a Protect Bar 148
Mounting an Environment-Resistant Case 150
Mounting 152
Top/Bottom Mounting Brackets 152
Intermediate Mounting Brackets 152
Mounting Procedure 153
Adjustment Procedure 156
Wiring 157
Wiring Precautions 157
Power Supply Unit 158
Wiring Procedure 159

Chapter5 Input/Output Circuit and Applications 165
Input/Output Circuit 166
Wiring Examples 167
Using only F3SJ 167
Connecting 2 Muting Sensors 168
Connecting 4 Muting Sensors 169
Connecting to an F3SP-B1P 170
Connecting to an F3SX-E-L2R2 171
Connecting to a G9SA-301 172
Connecting to a G9SA-300-SC 173
Connecting to a G9SB-301-D 174
Connecting to a G9SX-AD322-T15 175
Using a Simple Wiring Connector 176

Chapter6 Checklists 177
Pre-Operation Checklists 178
Checklists 178
Maintenance Checklists 181
Checklists 181

Chapter7 Appendix 183
Troubleshooting 184
Lockout State 184
Problem under other state than lockout 191
Accessories (Sold Separately) 193
Glossary 201
Related Standards 205

International Standards 205
European Standards 205
U.S. Federal Regurations 205
U.S. Standards 205
Canadian Standards 206
Revision History 207

Chapter1 Overview and Specifications

Basic Configuration and Names	2
Application Examples	5
Features	9
Indicator Display Patterns	11
Ratings	14
Ratings/Specifications	14
Model Name List/Response Times	17
Power Cable Length	19
Compatibility with former version	20

Basic Configuration and Names

This section describes the system configuration and part names of the F3SJ.

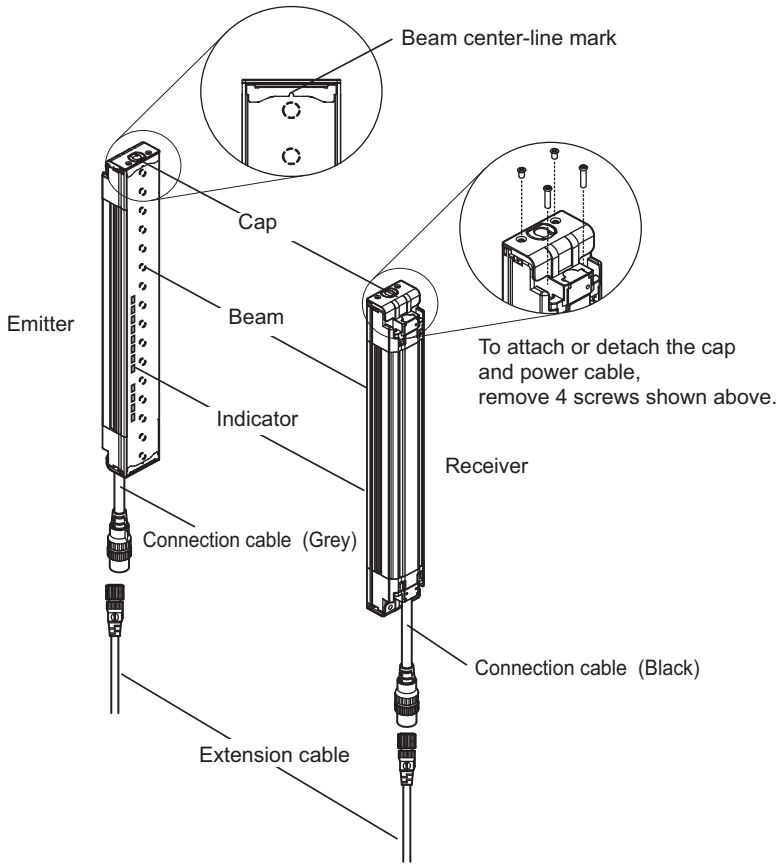

Component	Model name	Description
Emitter, receiver 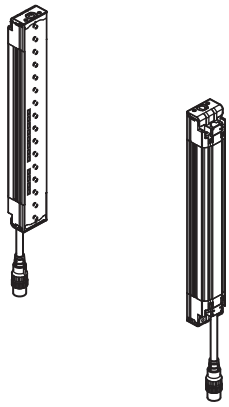	F3SJ-A□□□□P□□	Select a model name based on the required protective height and detection capability. (Cap and connection cable are included.) The model name can be understood as follows: F3SJ-A□□□□P□□-□ 1 2 3 4 1: Protective height (mm) 2: Output type (P=PNPoutput type) 3: Detection capability (mm) 4: L is emitter, D is receiver, blank is a set of an emitter and a receiver

CHECK!

To distinguish between the emitter and receiver, find the labels attached to the front of the F3SJ. The label on the emitter reads "EMITTER" and the label on the receiver reads "RECEIVER".
These words are printed on the side where the power supply connector is located.

Component		Model name	Description
Extension cable	Cable with connector on one end	F39-JD□A	This extension cable is used to connect the F3SJ to a controller with discrete terminals (e.g. F3SX, G9SA, G9SB, G9SX) or to a safety processing system (e.g. DeviceNet safety). p.193
	Cable with connectors on both ends 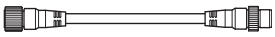	F39-JD□B	This extension cable is used when the length of the connection cable is insufficient or for plug and play connection to the F3SP-B1P controller. The length can be selected. p.193
	Cable with connectors on both ends 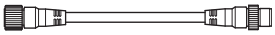	F39-JC□C	This connection cable is used for plug and play connection to the G9SA-300-SC controller. The length can be selected.
Simple Wiring Connector 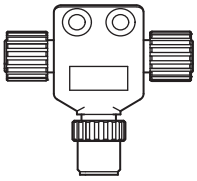		F39-CN5	This connector is used for a reduced wiring system, in combination with the following cables for reduced wiring system.
Cable for reduced wiring (2 cables per set, for emitter and receiver) 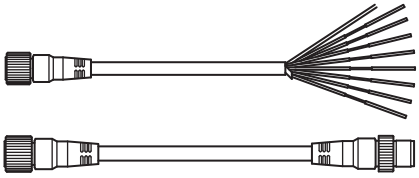		F39-JD□□□□BA	These cables are used for a reduced wiring system, a set of connector cables for emitter's ends and receiver's ends. p.194

Components to be selected if necessary

Component	Model name	Description
Optional bracket	-	Use this bracket (sold separately) for dedicated applications. p.129
Series connection cable for close contact 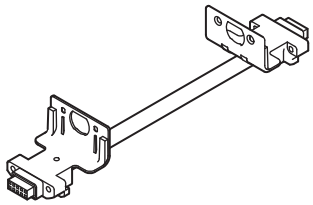	F39-JJR06L F39-JJR15L	Required for connecting multiple sets of F3SJ in a series. It is used when you wish to perform series connection with minimum length. Connection Procedure p.122
Series connection cable for extension 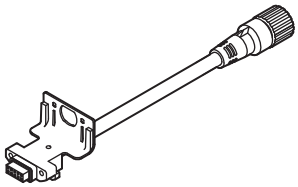	F39-JJR3W	Required for connecting multiple sets of F3SJ in a series. The F39-JJR3W can be used for extension with cable with connectors on both ends(F39-JD□B). Connection Procedure p.123
Key cap for muting 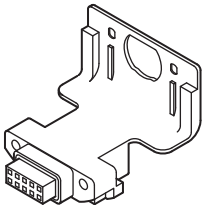	F39-CN6	Required when using muting function. (Case color : Orange) Muting System p.31
Indicator cable 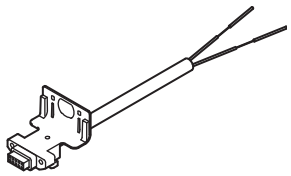	F39-JJ3N F39-A01P□-PAC	Required when attaching external indicator(s) to the F3SJ. Attaching External Indicators p.124
Setting console 	F39-MC21	Required to change functional setting or investigate status of F3SJ. Using the Setting Tool p.54
PC tool for F3SJ 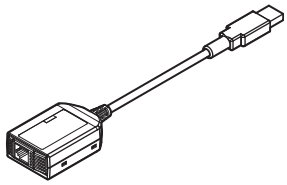	F39-GWUM	Required to change functional setting or investigate status of F3SJ. Using the Setting Tool p.54

Application Examples

Detect the Approach to a Hazardous Zone

The F3SJ should be installed where workers require frequent access in order to perform tasks such as maintenance, and where physical barriers are difficult to install.

■ Detect the Approach of a Person

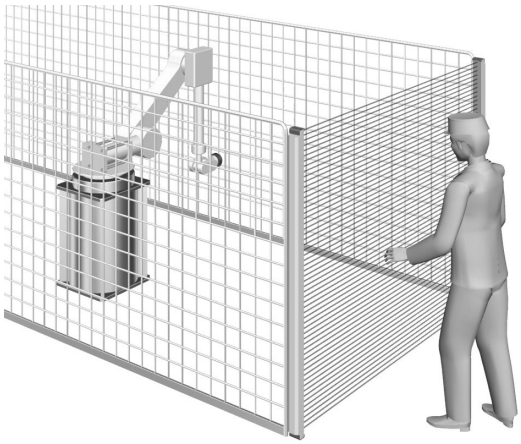

■ Detect a Person's Limbs

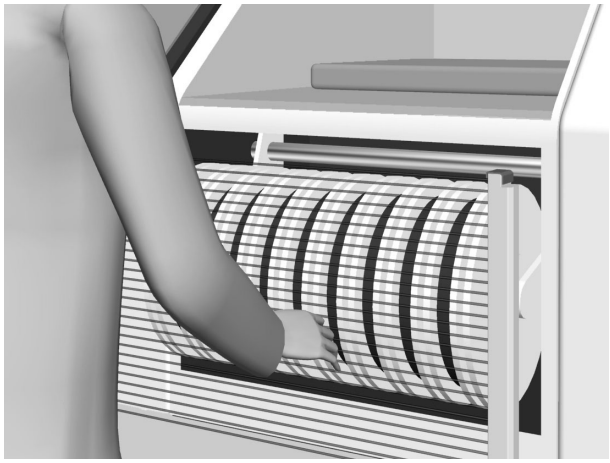

Using Multiple Sets in Combination

By installing sensors on both sides of a machine as well as in front, you can move workpieces in and out more efficiently than when a physical barrier is installed. If the sensors are aligned in a U-shape, series-connection cables can be used between sets (up to 4 sets), so that only one control device is used, drastically reducing the amount of wiring in the panel.

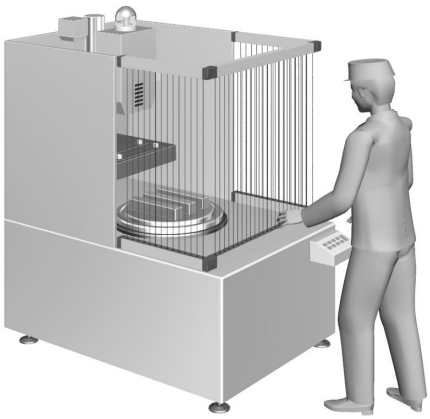

For a System in which a Workpiece Crosses Detection Zone (Muting Function)

Enter of a workpiece can be detected by a sensor and the detection zone can be temporarily disabled only while the workpiece is crossing the whole or specified zone. This function is called muting.
Muting is when a work piece is allowed to enter into a dangerous zone without tripping the F3SJ and stopping the process. Muting sensors are installed and arranged as to detect the work piece and not a human entering the zone.

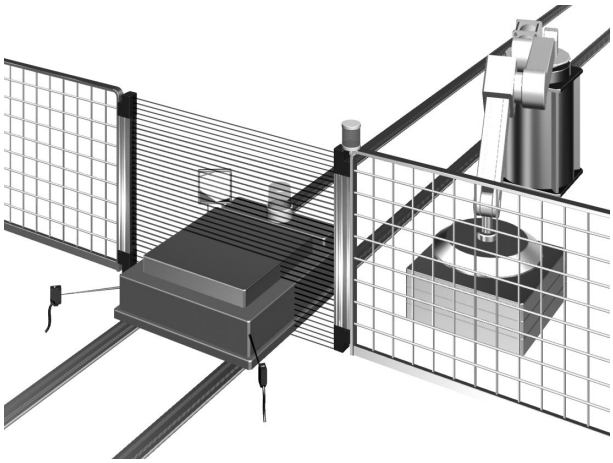

For a System that Has a Machine Within a Detection Zone

■ When the Zone Is Fixed (Fixed Blanking Function):

For a system in which a fixed facility such as a worktable or a conveyor interrupts specific beams, the fixed blanking function can be used to disable the specific beams.

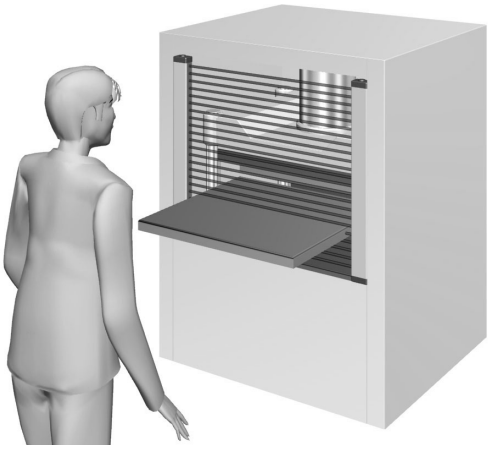

■ When the Zone Is Movable (Floating Blanking Function):

If a part of the machine can move within the detection zone, the floating blanking function can be used to disable a part of the detection zone.

You can configure a number of beams to be interrupted by an object so that the safety function works only if more beams than the number are interrupted.

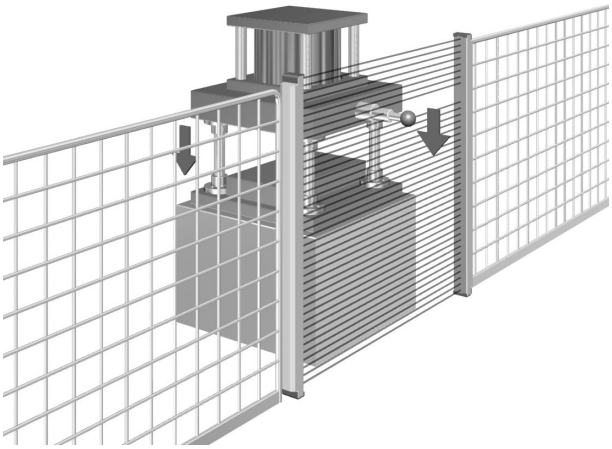

To Notify a Person of Proximity to a Detection Zone (Warning Zone Function)

This function notifies a person that he/she is getting close to a detection zone before activating the safety functions. It can be used to prevent the unintended stopping of a machine due to the approach of a person.

Part of a detection zone is configured as a warning zone.

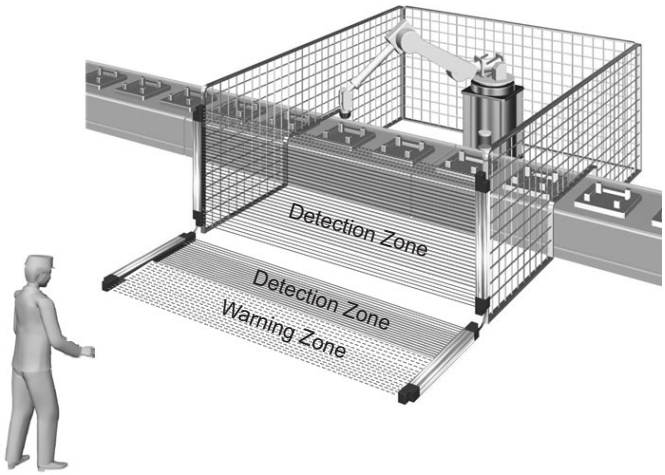

Features

Protective Height Available in Incremental Sizes

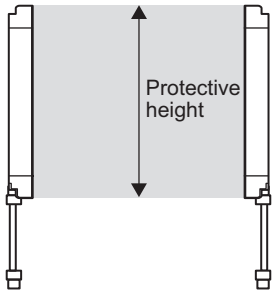

Series	Protective height	Detection capability
F3SJ-A□□□□P14	245mm to 2117mm (in 9mm increments)	Dia. 14mm
F3SJ-A□□□□P20	245mm to 2,495mm (in 15mm increments)	Dia. 20mm
F3SJ-A□□□□P25	260mm to 2,500mm (in 20mm increments)	Dia. 25mm
F3SJ-A□□□□P30	245mm to 2,495mm (in 25mm increments)	Dia. 30mm
F3SJ-A□□□□P55	270mm to 2,470mm (in 50mm increments)	Dia. 55mm

Easy-to-Read Light Level and Error Mode Display

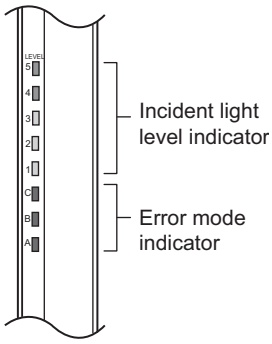

Beam alignment is simplified using 5 LEDs that display the incident light level.
Error status is indicated on 3 additional LEDs when an error occurs.

Indicator Display Patterns p.11

Providing Tools for Setting

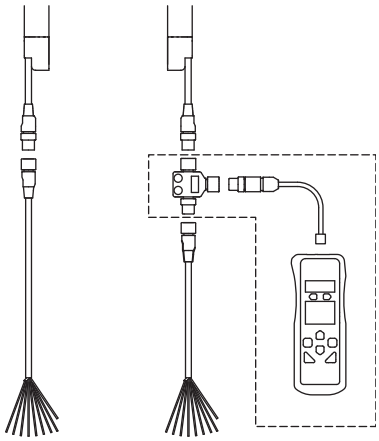

Two types of tools are provided to change functional setting of F3SJ. (Accessories sold separately)
These tools allow you to change functions or check status of F3SJ, taking more advantage of F3SJ.
•Setting Console F39-MC21
•PC Tool For F3SJ F39-GWUM

Additional Safety Functions

•External test (light emission stop)
•External device monitoring function
•Interlock function
•Fixed/Floating Blanking Function
(Configuration by the setting tool is required)

Enhanced Mutual Interference Prevention

When the series connection function is used, mutual interference is prevented in up to 400 beams in 4 sets.
When F3SJ are used individually, the newly designed interference light detection and cycle shift algorithm prevents mutual interference in up to 3 sets.
The effect of interference between the F3SJ and other photoelectric sensors can be reduced by using the setting tool to shorten the operating range.

p.117

Muting/Override Function are Provided

An F3SJ by itself can operate with muting or override function without using a controller.

Definition of muting function and override function p.201

Indicator Display Patterns

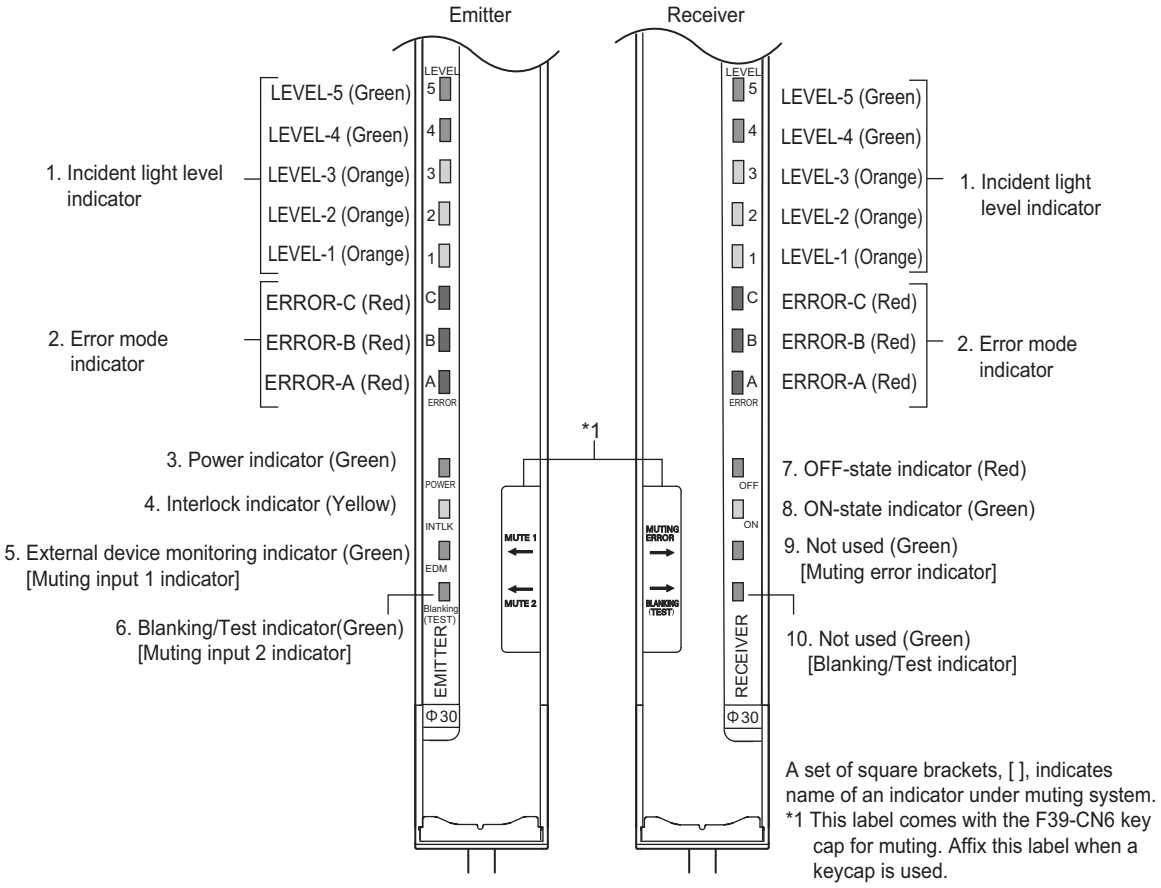

Internal Indicator for Basic System

Shown below are indication statuses of F3SJ's internal indicator when you purchased.

No.	Indicators		ON/ Blinking	Description
1	Incident light level indicator	LEVEL-1 to 5	ON	Indication status of LEVEL-1 to 5 shows the incident light level status of the F3SJ.
2	Error mode indicator	ERROR-A to C	ON/ Blinking	Turns ON or blinks only when the F3SJ enters lockout, and the cause of the error is indicated by the status of ERROR-A to C indicators.When F3SJ are series-connected, the error mode indicator lamps turn ON or blink according to the details of each error. Affix the error mode label (included) near the F3SJ to allow for quick troubleshooting when errors occur. For details of the error mode, see "Chapter 7 Troubleshooting".
3	Power indicator	POWER	ON	Turns ON while the power is ON.
			Blinking	Blinks during maintenance status.
4	Interlock indicator	INTLK	ON	Turns ON when F3SJ is in interlock state.
			Blinking	Blinks when in lockout.
5	External device monitoring indicator	EDM	ON	Turns ON when an input is given to external device monitoring input.
6	Blanking/Test indicator	BLANKING/ TEST	ON	Turns ON when the blanking function and warning zone function are enabled.
			Blinking	Blinks when external test is being performed.

No.	Indicators		ON/ Blinking	Description
7	OFF-state indicator	OFF	ON	Turns ON when safety outputs are OFF.
			Blinking	Blinks at following states: - Lockout state - One or more beams are blocked during the maintenance status
8	ON-state indicator	ON	ON	Turns ON when safety outputs are ON.
			Blinking	Blinks when no beams are blocked during the maintenance status
9	–	–	–	–
10	–	–	–	–

Internal Indicator for Muting System

Shown below are internal indicator statuses while the keycap for muting is being attached.

No.	Indicators		ON/ Blinking	Description
1	Incident light level indicator	LEVEL-1 to 5	ON	Indication status of LEVEL-1 to 5 shows the incident light level status of the F3SJ.
2	Error mode indicator	ERROR-A to C	ON/ Blinking	Turns ON or blinks only when the F3SJ enters lockout, and the cause of the error is indicated by the status of ERROR-A to C indicators.When F3SJ are series-connected, the error mode indicator lamps turn ON or blink according to the details of each error. Affix the error mode label (included) near the F3SJ to allow for quick troubleshooting when errors occur. For details of the error mode, see "Chapter 7 Troubleshooting".
3	Power indicator	POWER	ON	Turns ON while the power is ON.
			Blinking	Blinks during maintenance status.
4	Interlock indicator	INTLK	ON	Turns ON when F3SJ is in interlock state.
			Blinking	Blinks when in lockout.
5	Muting input 1 indicator	MUTE1	ON	Turns ON when an input is given to muting input 1.
			Blinking	Blinks during muting/override.
6	Muting input 2 indicator	MUTE2	ON	Turns ON when an input is given to muting input 2.
			Blinking	Blinks during muting/override.
7	OFF-state indicator	OFF	ON	Turns ON when safety outputs are OFF.
			Blinking	Blinks at following states: - Lockout state - One or more beams are blocked during the maintenance status
8	ON-state indicator	ON	ON	Turns ON when safety outputs are ON.
			Blinking	Blinks when no beams are blocked during the maintenance status
9	Muting error indicator	MUTING ERROR	ON	Turns ON when a muting error occurs.
10	Blanking/Test indicator	BLANKING/ TEST	ON	Turns ON when the blanking function is enabled.
			Blinking	Blinks when external test is being performed.

For an explanation of terminology such as function names, refer to the glossary.

Glossary p.201

Display Patterns of the Incident Light Level Indicator

incident light level indicator	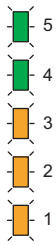	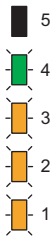	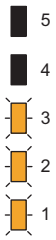			
Safety Output	ON	ON	ON	OFF	OFF	OFF
Incident light level	170% or higher	Less than 170% ~ 130%	Less than 130% ~ 100%	Less than 100% ~ 75%	Less than 75% ~ 50%	Less than 50%

CHECK!

Operation is possible with incident light level of 100% or more, but to ensure stability, operate when all incident light level indicators

Ratings

Ratings/Specifications

In the model names in this table, the □□□□ contain the 4-digit number indicating the protective height (mm).

		F3SJ-A □□□□P14	F3SJ-A □□□□P20	F3SJ-A □□□□P25	F3SJ-A □□□□P30	F3SJ-A □□□□P55
Detection capability		Opaque objects	Opaque objects	Opaque objects	Opaque objects	Opaque objects
		Diameter 14mm	Diameter 20mm	Diameter 25mm	Diameter 30mm	Diameter 55mm
Beam gap		9mm	15mm	20mm	25mm	50mm
Number of beams		26 to 234	16 to 166	13 to 125	10 to 100	6 to 50
Protective height		245 to 2,117mm	245 to 2,495mm	260 to 2,500mm	245 to 2,495mm	270 to 2,470mm
Lens diameter		Diameter 5mm				
Operating range		0.2 to 9m (for protective height up to 1649 mm) 0.2 to 7m (for protective height 1655 mm or greater) (Operating range can be reduced to 0.5m through the setting tool)				
Response time		ON to OFF: 10ms to 27.5ms max., OFF to ON: 40ms to 110ms max. (when incidence is stable). Refer to p.17 for details.				
Startup waiting time		2s max. (2.2s max in case of series connection)				
Power supply voltage(Vs)		24VDC ± 20% (ripple p-p10% max.)				
Current consumption (no load)	Emitter	Up to 50 beams: 76 mA max., 51 to 100 beams: 106 mA max., 101 to 150 beams: 130 mA max., 151 to 200 beams: 153 mA max., 201 to 234 beams: 165 mA max.				
	Receiver	Up to 50 beams: 68 mA max., 51 to 100 beams: 90 mA max., 101 to 150 beams: 111 mA max., 151 to 200 beams: 128 mA max., 201 to 234 beams: 142 mA max.				
Light source		Infrared LED (870nm wavelength)				
Effective aperture angle (EAA)		Within ±2.5 ° for the emitter and receiver at a detection distance of at least 3 m according to IEC61496-2				
Safety outputs(OSSD)		PNP transistor outputs x 2, Load current 300mA max, Residual voltage 2V max. (except for voltage drop due to cable extension)(including inductance load), Maximum capacity load 2.2 µF, leakage current 1 mA max. (This may be different from previously used logic (ON/OFF) because safety circuit is used.)				
Auxiliary output 1 (Non-safety output)		PNP transistor output x 1, Load current 300mA max., Residual voltage 2V max. (except for voltage drop due to cable extension), leakage current 1mA max.				
Auxiliary output 2 (non-safety output, a function for a basic system)		PNP transistor output x 1, load current 50mA or less, residual voltage 2V or less (excluding influence by cable extension), leakage current 1mA or less				
External indicator output (Non-safety output)		Connectable external indicator - Incandescent lamp : 24VDC, 3 to 7W - LED lamp : Load current 10 to 300mA max. Leakage current 1mA max. (An indicator cable F39-JJ3N or F39-A01P□-PAC is required when using an external indicator.)				
Output operation mode		Safety outputs : ON when receiving light Auxiliary output 1 : Reverse output of safety output (operation mode can be changed by the setting tool) Auxiliary output 2: Turns ON when 30,000 hours of power-on time passes (operation mode can be changed by the setting tool) External indicator output 1: Reverse output of safety output (for basic system), ON during muting/override (for muting system) (Operation mode can be changed by the setting tool) External indicator output 2: ON in lockout (for basic system), ON during muting/override (for muting system) (operation mode can be changed by the setting tool)				

		F3SJ-A □□□□P14	F3SJ-A □□□□P20	F3SJ-A □□□□P25	F3SJ-A □□□□P30	F3SJ-A □□□□P55
Input voltage		Test input, Interlock select input, Reset input, Muting input: ON voltage: 9V to Vs* (short-circuit current: approx. 2.0mA) OFF voltage: 0 to 1.5V , or open External device monitoring input is: ON voltage: 9V to Vs* (short-circuit current: approx. 3.5mA) OFF voltage: open * Vs here means the voltage value under use environment.				
Indicators	Emitter	Incident light level indicators (green LED x 2, orange LED x 3): ON based on the amount of incident light Error mode indicators (red LED x 3): Blink to indicate error details Power indicator (green LED x 1): ON while power is ON Interlock indicator (yellow LED x 1): ON when in interlock/Blinks when in lockout External device monitoring indicator (muting input 1 indicator), Blanking/ Test indicator (muting input 2 indicator) (green LED x2): ON/Blink according to function				
	Receiver	Incident light level indicators (green LED x 2, orange LED x 3): ON based on the amount of incident light Error mode indicators (red LED x 3): Blink to indicate error details OFF-statet indicator (red LED x 1): ON when safety outputs are OFF/ Blinks when in lockout ON-state indicator (green LED x 1): ON when safety outputs are ON Muting error indicator, Blanking/Test indicator (green LED x 2): ON/Blink according to function				
Mutual interference prevention function		Interference light avoidance algorithm, operating range change function				
Series connection		Time division emission by series connection - Number of connections: Up to 4 sets - Total number of beams: Up to 400 - Cable length between sensors: 15 m max. (not including series connection cable (F39-JJR□L or F39-JJR3W) and power cable)				
Test function		- Self-test (After power ON, and during operation) - External test (light emission stop function by test input)				
Safety-related functions		- Start interlock, restart interlock (The setting tool is required when muting function is used) - External device monitoring - Muting (Includes lamp breakage detection and override functions. F39-CN6 key cap for muting is required) - Fixed blanking (configuration by the setting tool is required) - Floating blanking (configuration by the setting tool is required)				
Connection method		Connector method (M12, 8-pin)				
Protection circuit		Output short-circuit protection, and power supply reverse polarity protection				
Ambient temperature		During operation: -10 to 55°C (without freezing), During storage: -30 to 70°C				
Ambient humidity		During operation: 35 to 85%RH (no condensation), During storage: 35 to 95%RH				
Ambient light intensity		Incandescent lamp: receiving-surface light intensity of 3,000 lx max., Sunlight: receiving-surface light intensity of 10,000 lx max.				
Insulation resistance		20MΩ or higher (500VDC)				
Dielectric strength voltage		1, 000VAC, 50/60Hz, 1min				
Degree of protection		IP65 (IEC60529)				
Vibration resistance		Class 3M4 (IEC TR 60721-4-3) Operation limit: 5~150Hz, Multiple amplitude of 7 mm, Acceleration of 1G, 10 sweeps each in X, Y, and Z directions (no delay at resonant frequencies)				
Shock resistance		Class 3M4 (IEC TR 60721-4-3) Operation limit: Acceleration of 15G, Pulse duration of 6ms, 100 shocks for each in X, Y, and Z directions (600 shocks in total)				
Connection cable, Series connection cable (F39-JJR□L, JJR3W)		Dia. 6 mm, 8-wire (0.15mm^2 x 8) with braided shield, Allowable bending radius R5mm				

		F3SJ-A □□□□P14	F3SJ-A □□□□P20	F3SJ-A □□□□P25	F3SJ-A □□□□P30	F3SJ-A □□□□P55
Extension cable (F39-JD□A, JD□B, JC□C)		Dia. 6.6 mm, 8-wire (0.3mm² x 4P, conductor resistance 0.058 ohm/m), with braided shield, Allowable bending radius of R36mm. (To extend a cable, use an equivalent or higher-performance cable (twisted-pair wire) , and do not use the cable in the same duct as that for high-voltage cables or power cables) For details about extension lengths (power cable length) p.19 For details about twisted pair wire (single connector cable) p.159				
Material		Casing (including metal parts on both ends): Aluminum, zinc die-cast Cap: ABS resin Optical cover: PMMA resin (acrylic) Cable: Oil resistant PVC				
Weight	Net	- F3SJ-A□□□□P14 Weight (g)=(protective height) x 1.67+215 - F3SJ-A□□□□P20 Weight (g)=(protective height) x 1.5+217 - F3SJ-A□□□□P25 Weight (g)=(protective height) x 1.45+219 - F3SJ-A□□□□P30 Weight (g)=(protective height) x 1.41+220 - F3SJ-A□□□□P55 Weight (g)=(protective height) x 1.3+220				
	Packaged	- F3SJ-A□□□□P14 Weight (g)=(protective height) x 1.7+ α - F3SJ-A□□□□P20/F3SJ-A□□□□P25/F3SJ-A□□□□P30 Weight (g)=(protective height) x 1.5+ α - F3SJ-A□□□□P55 Weight (g)=(protective height) x 1.4+ α The values for α are as follows: When protective height is between 245 and 596mm, α=1100 When protective height is between 600 and 1130mm, α=1500 When protective height is between 1136 and 1658mm, α=2000 When protective height is between 1660 and 2180mm, α=2400 When protective height is between 2195 and 2500mm, α=2600				
Accessories		Instruction sheet, top and bottom mounting brackets, intermediate mounting brackets *1, error mode label, Quick installation manual(QIM) *1 The number of intermediate mounting brackets depends on the total length of the F3SJ. - F3SJ total length is from 600 to 1,130mm: 1 set for each the emitter and receiver is included - F3SJ total length is from 1136 to 1,658mm: 2 sets for each the emitter and receiver are included - F3SJ total length is from 1660 to 2,180mm: 3 sets for each the emitter and receiver are included - F3SJ total length is from 2195 to 2500mm: 4 sets for each the emitter and receiver are included				
Applicable standards		IEC61496-1, EN61496-1, UL61496-1 Type 4ESPE (Electro-Sensitive Protective Equipment) IEC61496-2, EN61496-2, UL61496-2 Type 4AOPD (Active Opto-electronic Protective Devices) IEC61508, EN61508 SIL3, EN ISO 13849-1 (Category 4, PL e), ISO 13849-1 (Category 4, PL e)				
Proof test interval T_1 Mission time T_M		20 years (IEC 61508, ISO 13849-1)				
Safety-related characteristic data (EN 61508:2010)		See http://www.fa.omron.co.jp/safety_6en/				

Model Name List/Response Times

F3SJ-A □□□□P14	F3SJ-A □□□□P20	F3SJ-A □□□□P25	F3SJ-A □□□□P30	F3SJ-A □□□□P55	Number of beams	Response time (ON to OFF)	Response time (OFF to ON)
-	-	-	-	F3SJ-A0270P55	6 beams	10ms	40ms
-	-	-	-	F3SJ-A0320P55	7 beams	10ms	40ms
-	-	-	-	F3SJ-A0370P55	8 beams	10ms	40ms
-	-	-	-	F3SJ-A0420P55	9 beams	10ms	40ms
-	-	-	F3SJ-A0245P30	F3SJ-A0470P55	10 beams	10ms	40ms
-	-	-	F3SJ-A0295P30	F3SJ-A0570P55	12 beams	10ms	40ms
-	-	F3SJ-A0260P25	-	F3SJ-A0620P55	13 beams	10ms	40ms
-	-	-	-	-	14 beams	10ms	40ms
-	-	F3SJ-A0300P25	-	F3SJ-A0720P55	15 beams	10ms	40ms
-	F3SJ-A0245P20	-	F3SJ-A0395P30	F3SJ-A0770P55	16 beams	10ms	40ms
-	-	-	-	-	17 beams	11ms	44ms
-	F3SJ-A0275P20	-	-	F3SJ-A0870P55	18 beams	11ms	44ms
-	-	-	F3SJ-A0470P30	F3SJ-A0920P55	19 beams	11ms	44ms
-	F3SJ-A0305P20	-	-	F3SJ-A0970P55	20 beams	11ms	44ms
-	-	-	F3SJ-A0520P30	F3SJ-A1020P55	21 beams	11ms	44ms
-	-	-	F3SJ-A0545P30	-	22 beams	11ms	44ms
-	-	F3SJ-A0460P25	F3SJ-A0570P30	F3SJ-A1120P55	23 beams	11ms	44ms
-	-	-	-	F3SJ-A1170P55	24 beams	11ms	44ms
-	-	-	F3SJ-A0620P30	-	25 beams	11ms	44ms
F3SJ-A0245P14	F3SJ-A0395P20	-	-	F3SJ-A1270P55	26 beams	11ms	44ms
-	-	F3SJ-A0540P25	-	F3SJ-A1320P55	27 beams	11ms	44ms
F3SJ-A0263P14	-	-	-	-	28 beams	11ms	44ms
-	-	-	F3SJ-A0720P30	F3SJ-A1420P55	29 beams	11ms	44ms
-	F3SJ-A0455P20	-	-	-	30 beams	12ms	48ms
-	-	F3SJ-A0620P25	-	-	31 beams	12ms	48ms
F3SJ-A0299P14	-	-	F3SJ-A0795P30	F3SJ-A1570P55	32 beams	12ms	48ms
F3SJ-A0317P14	-	-	-	-	34 beams	12ms	48ms
-	-	F3SJ-A0700P25	F3SJ-A0870P30	-	35 beams	12ms	48ms
-	F3SJ-A0545P20	-	-	F3SJ-A1770P55	36 beams	12ms	48ms
-	-	-	F3SJ-A0920P30	-	37 beams	12ms	48ms
-	F3SJ-A0575P20	-	F3SJ-A0945P30	-	38 beams	12ms	48ms
-	-	F3SJ-A0780P25	-	F3SJ-A1920P55	39 beams	12ms	48ms
-	F3SJ-A0605P20	-	F3SJ-A0995P30	-	40 beams	12ms	48ms
-	-	-	F3SJ-A1020P30	-	41 beams	12ms	48ms
F3SJ-A0389P14	F3SJ-A0635P20	-	-	F3SJ-A2070P55	42 beams	12ms	48ms
-	-	F3SJ-A0860P25	-	-	43 beams	13ms	52ms
-	-	-	F3SJ-A1095P30	-	44 beams	13ms	52ms
-	-	-	F3SJ-A1120P30	F3SJ-A2220P55	45 beams	13ms	52ms
-	F3SJ-A0695P20	-	-	-	46 beams	13ms	52ms
-	-	F3SJ-A0940P25	-	-	47 beams	13ms	52ms
-	-	-	F3SJ-A1195P30	F3SJ-A2370P55	48 beams	13ms	52ms
F3SJ-A0461P14	F3SJ-A0755P20	-	-	F3SJ-A2470P55	50 beams	13ms	52ms
-	-	F3SJ-A1020P25	F3SJ-A1270P30	-	51 beams	13ms	52ms

F3SJ-A □□□□P14	F3SJ-A □□□□P20	F3SJ-A □□□□P25	F3SJ-A □□□□P30	F3SJ-A □□□□P55	Number of beams	Response time (ON to OFF)	Response time (OFF to ON)
-	F3SJ-A0785P20	-	-	-	52 beams	13ms	52ms
-	-	-	-	-	53 beams	13ms	52ms
-	F3SJ-A0815P20	-	-	-	54 beams	13ms	52ms
-	-	F3SJ-A1100P25	-	-	55 beams	13ms	52ms
-	-	-	F3SJ-A1395P30	-	56 beams	14ms	56ms
F3SJ-A0533P14	F3SJ-A0875P20	-	-	-	58 beams	14ms	56ms
-	-	F3SJ-A1180P25	-	-	59 beams	14ms	56ms
F3SJ-A0551P14	-	-	-	-	60 beams	14ms	56ms
-	F3SJ-A0935P20	-	-	-	62 beams	14ms	56ms
-	-	F3SJ-A1260P25	-	-	63 beams	14ms	56ms
-	-	-	F3SJ-A1620P30	-	65 beams	14ms	56ms
F3SJ-A0623P14	F3SJ-A1025P20	-	-	-	68 beams	15ms	60ms
-	-	-	F3SJ-A1745P30	-	70 beams	15ms	60ms
-	-	F3SJ-A1420P25	-	-	71 beams	15ms	60ms
-	F3SJ-A1115P20	-	-	-	74 beams	15ms	60ms
-	-	F3SJ-A1500P25	F3SJ-A1870P30	-	75 beams	15ms	60ms
F3SJ-A0695P14	-	-	-	-	76 beams	15ms	60ms
-	-	F3SJ-A1580P25	-	-	79 beams	15ms	60ms
F3SJ-A0731P14	F3SJ-A1205P20	-	F3SJ-A1995P30	-	80 beams	15ms	60ms
-	F3SJ-A1265P20	-	-	-	84 beams	17.5ms	70ms
-	-	F3SJ-A1740P25	-	-	87 beams	17.5ms	70ms
F3SJ-A0803P14	-	-	-	-	88 beams	17.5ms	70ms
-	-	-	F3SJ-A2245P30	-	90 beams	17.5ms	70ms
-	-	F3SJ-A1900P25	F3SJ-A2370P30	-	95 beams	17.5ms	70ms
F3SJ-A0875P14	F3SJ-A1445P20	-	-	-	96 beams	17.5ms	70ms
-	F3SJ-A1505P20	-	F3SJ-A2495P30	-	100 beams	17.5ms	70ms
-	-	F3SJ-A2060P25	-	-	103 beams	17.5ms	70ms
F3SJ-A0983P14	-	-	-	-	108 beams	17.5ms	70ms
-	F3SJ-A1655P20	-	-	-	110 beams	17.5ms	70ms
-	-	F3SJ-A2220P25	-	-	111 beams	17.5ms	70ms
F3SJ-A1055P14	-	-	-	-	116 beams	20.0ms	80ms
-	-	F3SJ-A2380P25	-	-	119 beams	20.0ms	80ms
-	F3SJ-A1805P20	-	-	-	120 beams	20.0ms	80ms
-	-	F3SJ-A2420P25	-	-	121 beams	20.0ms	80ms
F3SJ-A1127P14	-	-	-	-	124 beams	20.0ms	80ms
-	-	F3SJ-A2500P25	-	-	125 beams	20.0ms	80ms
-	F3SJ-A1955P20	-	-	-	130 beams	20.0ms	80ms
F3SJ-A1199P14	-	-	-	-	132 beams	20.0ms	80ms
F3SJ-A1271P14	F3SJ-A2105P20	-	-	-	140 beams	20.0ms	80ms
-	F3SJ-A2255P20	-	-	-	150 beams	22.5ms	90ms
-	F3SJ-A2405P20	-	-	-	160 beams	22.5ms	90ms
F3SJ-A1487P14	-	-	-	-	164 beams	22.5ms	90ms
-	F3SJ-A2495P20	-	-	-	166 beams	22.5ms	90ms
F3SJ-A1631P14	-	-	-	-	180 beams	25.0ms	100ms
F3SJ-A1784P14	-	-	-	-	197 beams	25.0ms	100ms

For series connections, use the calculations below.

When 2 sets are series-connected:
•Response time (ON to OFF) :Response time of primary sensor + Response time of secondary sensor 1 -1 (ms)
•Response time (OFF to ON) :Response time (ON to OFF) x 4 (ms)

When 3 sets are series-connected:
•Response time (ON to OFF) :Response time of primary sensor + Response time of secondary sensor 2 + Response time of 3rd unit - 5 (ms)
•Response time (OFF to ON) :Response time (ON to OFF) x 5 (ms)

When 4 sets are series-connected:
•Response time (ON to OFF) :Response time of primary sensor + Response time of secondary sensor 1 + Response time of secondary sensor 2+ Response time of secondary sensor 3 - 8 (ms)
•Response time (OFF to ON) :Response time (ON to OFF) x 5 (ms)

Designation of F3SJ in series connection: p.120

Power Cable Length

Extension of power cable must be the length shown below or shorter:

In case F3SJ is directly connected to external power supply, or connected to G9SA-300-SC

Condition	Single	2 connected	3 connected	4 connected
Incandescent display lamps are used by auxiliary output and/or external indicator output	45m	40m	30m	20m
Incandescent display lamps are not used *	100m	60m	45m	30m

When connected to F3SP-B1P

Condition	Single	2 connected	3 connected	4 connected
Incandescent display lamps are - used by external indicator output 2	40m	30m	25m	20m
Incandescent display lamps are - used by external indicator output 1 and/or, - used by auxiliary output 1	60m	45m	30m	20m
Incandescent display lamps are not used *	100m	60m	45m	30m

* The F39-A01P□-PAC Dedicated External Indicator Set uses LEDs. Refer to the cable extension lengths for "Incandescent display lamps are not used".

⚠ WARNING

Extension of the cable must be within a specified length. If it isn't, safety function may not work properly, resulting in danger.

Compatibility with former version

Shown below is a table of compatibility of this version (Ver.2) with former one (Ver.1)

	Compatibility
Combination of Ver.1 emitter (receiver) and Ver.2 receiver (emitter)	Available, but the system operates as a system of Ver.1 sensors. *
Series connection of heterogeneous combination of Ver.1 and Ver.2 sensors	Available, but the system operates as a system of Ver.1 sensors. *
Product upgrade from Ver.1 to Ver.2	Upgrade is unavailable

* To use Ver.1 and Ver.2.0(or Ver.2.1) sensors in combination, setting of Ver.1 F3SJ must be changed. For a rental console dedicated to setting change, contact Omron's sales representative.

You can check a label on your F3SJ for its version as shown below.
Version can be identified by label background color. (Ver.1: White, Ver.2: Yellow)

Location of the label describing the F3SJ version

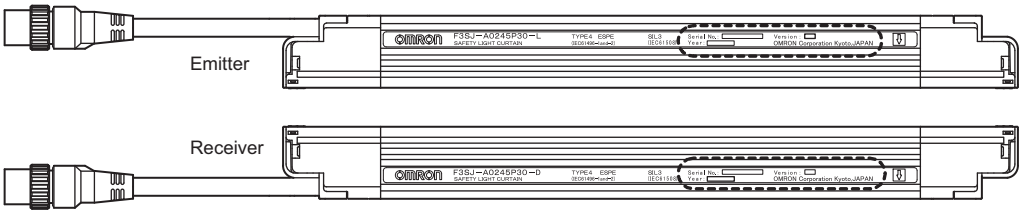

Enlarged view of area enclosed by dotted line

Serial No. : ①　　Version : ③
Year : ②　　OMRON Corporation Kyoto, JAPAN

① : Serial No.
② : Year of manufacture
③ : F3SJ version

Chapter2 System Configuration and Functions

How to Select a System 22

Selection Flow Chart 22
Combination of Functions 22

Basic System 23

Wiring Diagrams 23
Interlock Function 25
External Test Function 27
Self-Test Function 27
Auxiliary Output (Non-Safety Output) 28
Resetting Lockout 29
External Device Monitoring Function 30

Muting System 31

Upgrading F3SJ for Muting System 32
Standard Muting Mode 34
Wiring Diagrams 36
Installation Standard for Muting Sensors 38
Installation Example 1 of Standard Muting Mode (using 2 muting sensors) 38
Installation Example 2 of Standard Muting Mode (using 4 muting sensors) 42
Override Function 48
External Test Function 50
Self-Test Function 50
Auxiliary Output (Non-Safety Output) 51
Resetting Lockout 51
External Device Monitoring Function (EDM) 51

How to Select a System

Selection Flow Chart

Required system configuration depends on functions to be used. Use the following flow chart to determine the system.

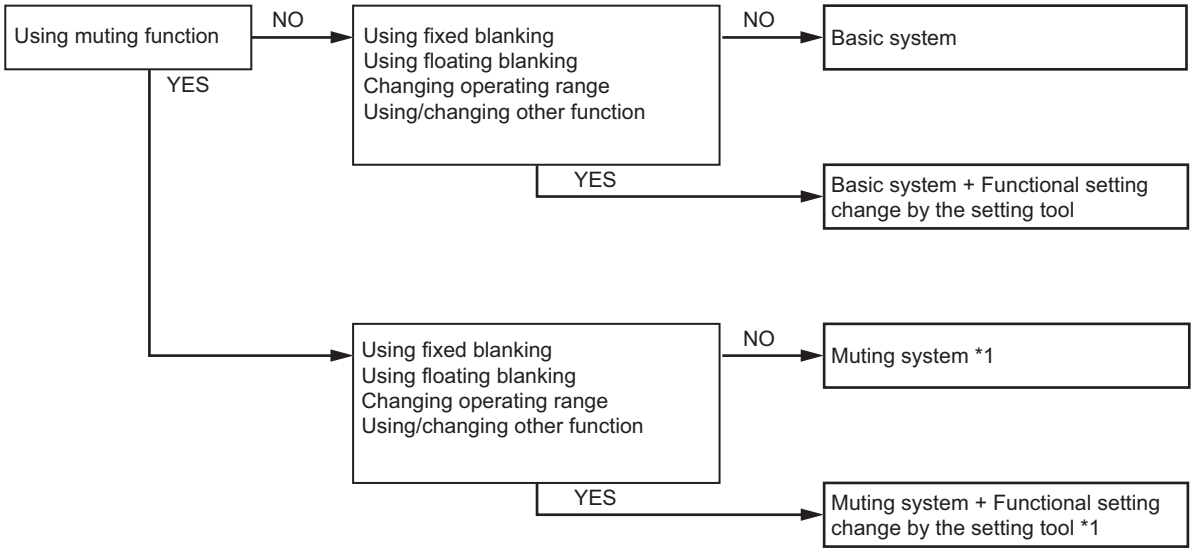

*1 Key cap for muting (F39-CN6) is required.

Combination of Functions

Availability of functional combination is shown below. Other functions than these functions can be combined.

O: Combination available

△: Can be combined by using the PC tool for F3SJ to change the setting. (Cannot be combined by using the setting console. For details, see Chapter 3. Setting Zone Adjacent Conditions, p.88.)

x: Combination unavailable

	Fixed Blanking Function	Floating Blanking Function	Muting/Override Function	Warning Zone Function
Fixed Blanking Function	-	△	O	△
Floating Blanking Function	△	-	△	△
Muting/Override Function	O	△	-	△
Warning Zone Function	△	△	△	-

Basic System

Basic system indicates the F3SJ with its default factory settings.
The basic system provides basic safety light curtain functions. Most functions can be used without performing additional configuration.

Wiring Diagrams

■ Wiring using manual reset mode, external device monitoring function

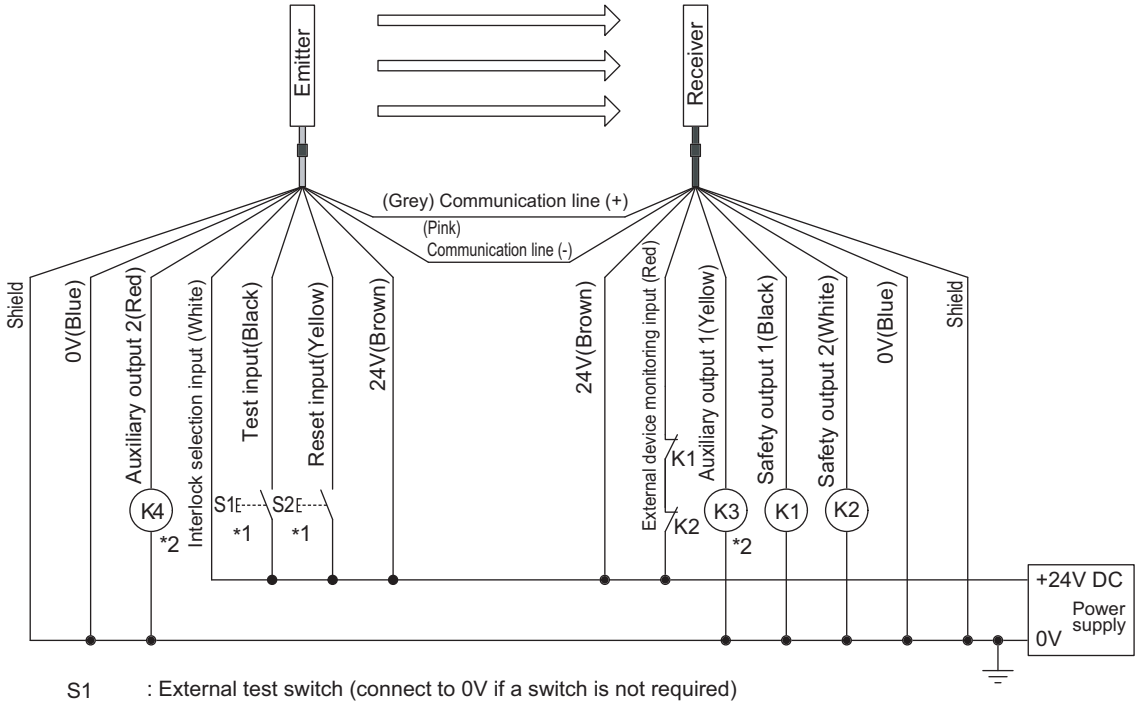

S1 : External test switch (connect to 0V if a switch is not required)
S2 : Interlock/lockout reset switch
K1, K2 : Relay or other device that controls hazardous parts of the machine
K3, K4 : Load or PLC, etc. (for monitoring)

*1 Use a switch for micro loads (Input specifications: 24V, 1.0mA or less)
*2 F3SJ can operate even if K3 and K4 are not connected

■ Wiring for Auto Reset Mode

Wiring the emitter's circuit as shown below provides auto reset mode.

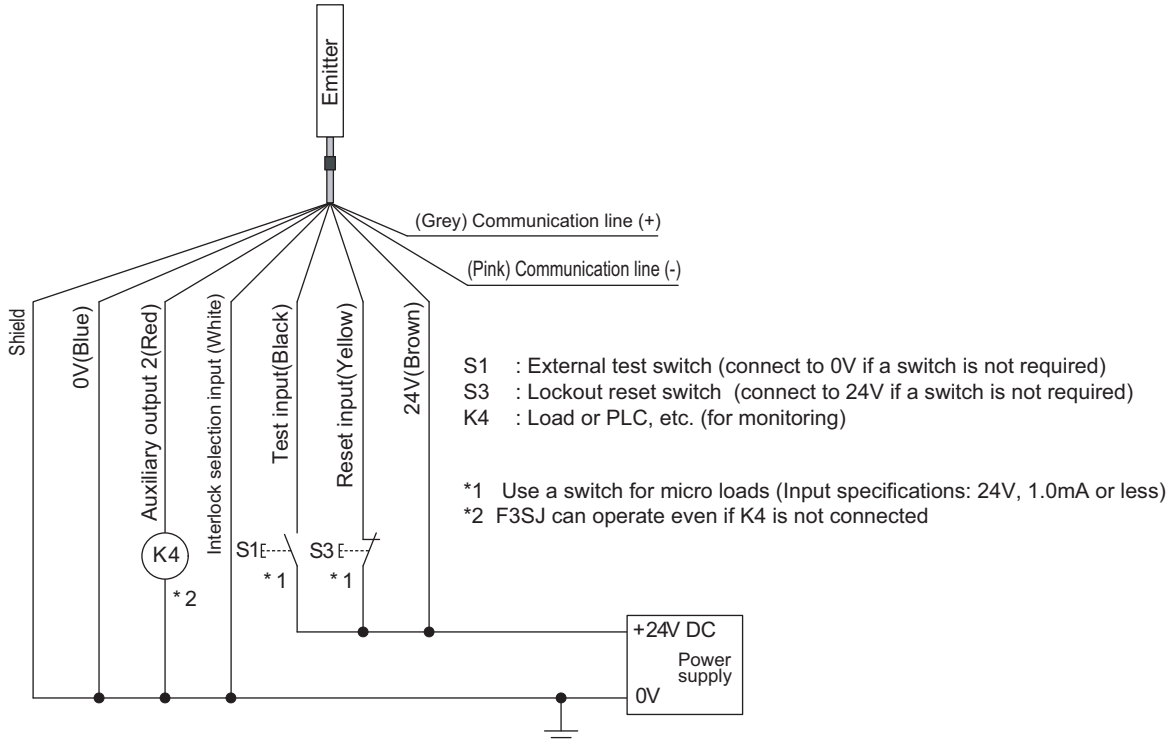

■ Wiring When External Device Monitoring Function Is Not Used

1.Disabling external device monitoring function by the setting tool

Or

2.The external device monitoring function is disabled by connecting auxiliary output 1 and external device monitoring input as shown below, when auxiliary output 1 settings have not been changed (output operation mode is "safety output information" and reverse output mode is "enabled").

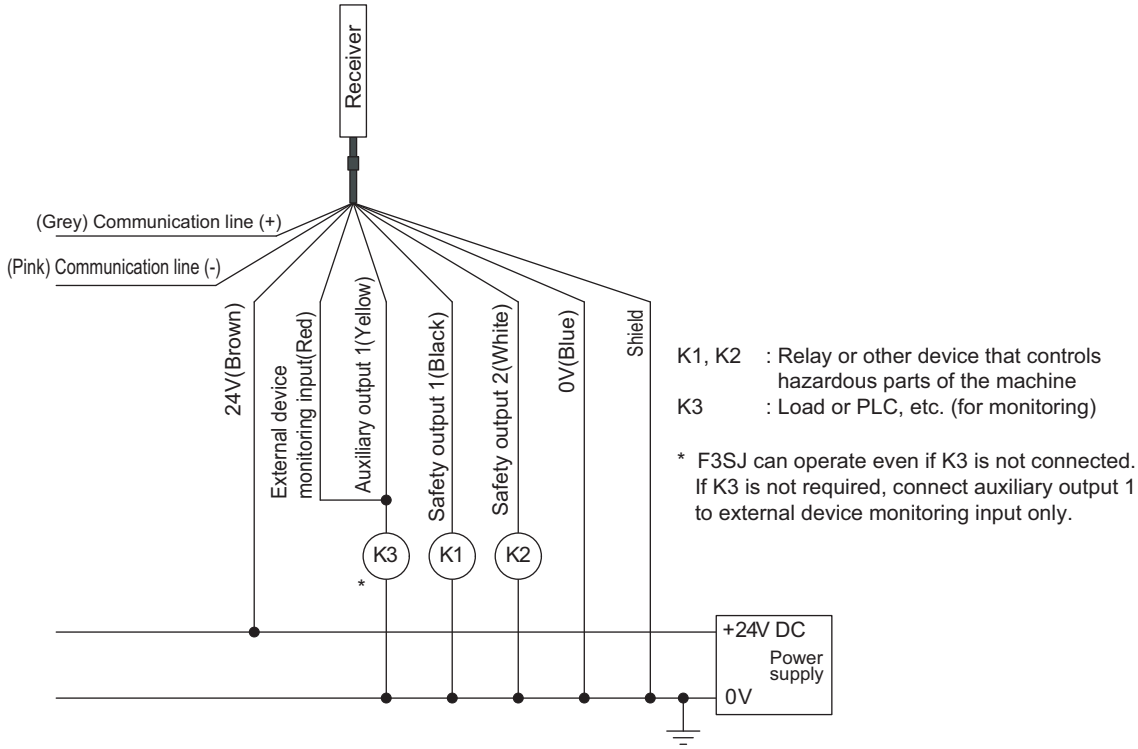

For mode setting of auxiliary output p.91

■ Ref.: Minimum Wiring Required to Check the Operation of the F3SJ

(Wiring for auto reset mode and deactivated external device monitoring function)

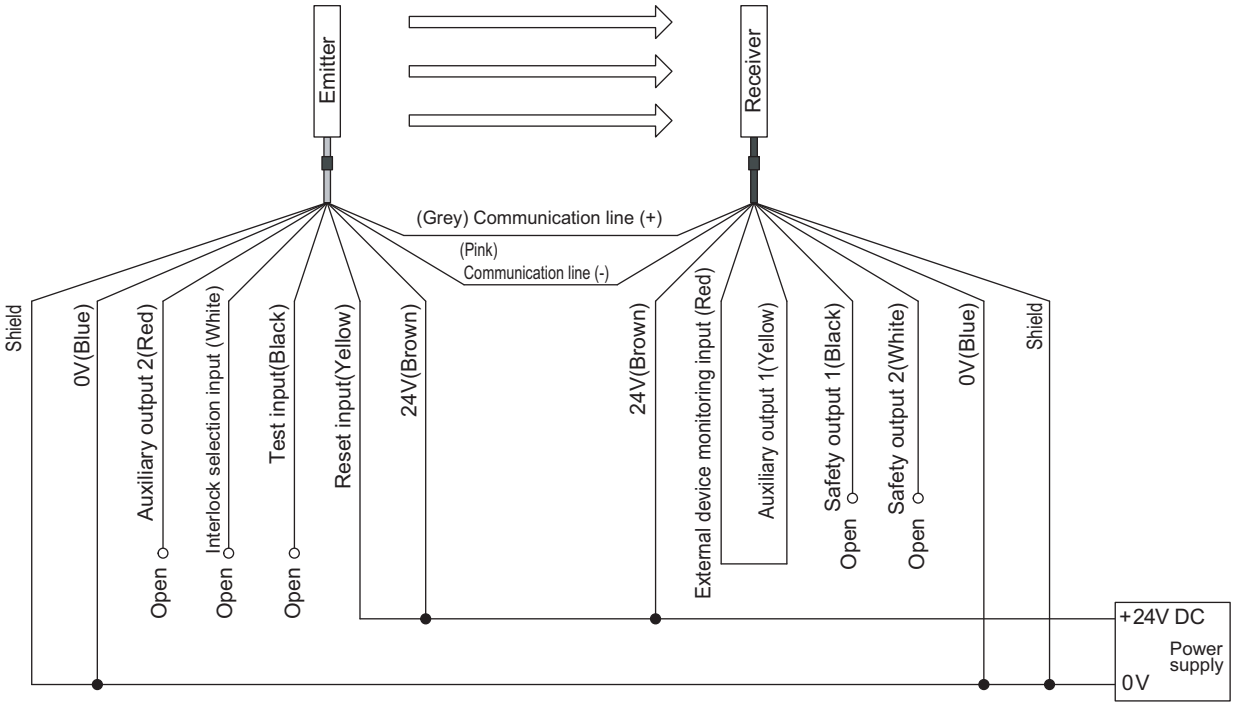

Interlock Function

The F3SJ turns the safety outputs OFF when its power is turned on or its beam is interrupted and holds this state until reset input is applied. This state is called "interlock".

Two methods can be used to reset the interlock state: "auto reset that automatically turns safety outputs ON when the interrupting object is removed" and "manual reset mode that keeps safety outputs OFF until a reset signal is provided, if the interrupting object is removed".

■ Auto Reset

When the interrupting object is removed from the detection zone, the safety outputs automatically turn ON. Auto reset is used on machines where a worker is not able to enter the zone between the detection zone and the hazardous part of the machine.

To wire auto reset:

1. Open the interlock selection input line, or short-circuit it to 0 to 1.5V (pin 1/white).
2. Short-circuit the reset input line to 9 to 24V (pin 4/yellow).
3. Turn ON the power to the F3SJ.

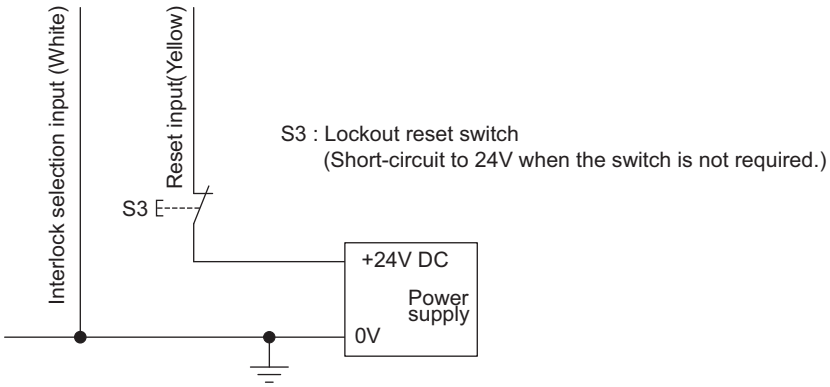

Wiring for Auto Reset Mode p.24

■ Manual Reset

When a reset input is given while no interrupting object exists in a detection zone, the safety outputs turn ON. This allows the machine to be manually reset using a reset switch after ensuring safety, preventing unexpected startup (EN1037).

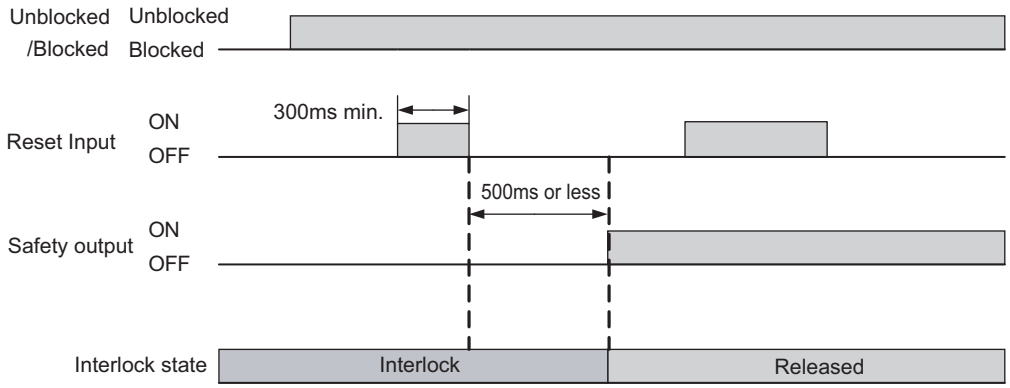

A sensor enters interlock state when:

- The power is turned ON (start interlock). This is useful if you want to keep the machine stopped until start inspection is completed after the power is turned ON.
- F3SJ is blocked (restart interlock). After the F3SJ is blocked and the machine stops, the machine can be restarted after safety is ensured.

Manual reset wiring procedure:

1. Connect the interlock selection input line to 9 to 24V. (pin 1/ white)
2. Connect the reset input line to 9 to 24V via a reset switch (N.O. contact). (pin 4/ yellow)
3. Keep the reset switch contact open, and turn ON the power to the F3SJ.

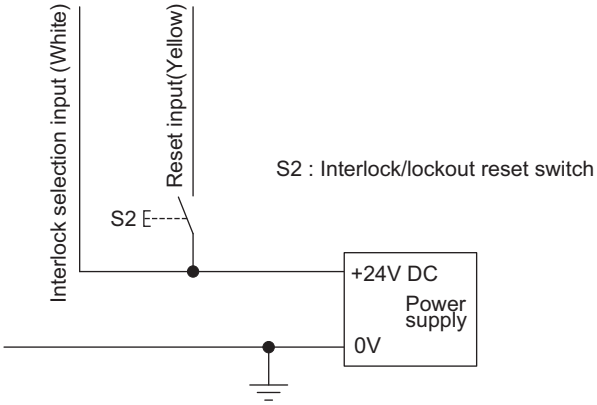

Wiring for manual reset mode p.23

To reset:

1. Cycle the reset switch to apply a voltage of 9 to 24V for 250ms or longer to the reset input, and then open the switch to apply a 0 to 1.5V signal or open circuit.

CHECK!

A reset switch must be installed outside of the hazardous zone in a location that provides a clear view of the hazardous zone.

■ Setting Change by the Setting Tool

Functional setting is available through the setting tool.

- Disabling start or restart interlock

For details, see p.96

External Test Function

This function forcibly stops the emission using an external signal. It can be used to verify that a safety system should properly stop when F3SJ is interrupted.
To stop the emission, apply 9 to 24V to the emitter's test input line. The voltage must be applied for a period 4 times that of Toff or longer.

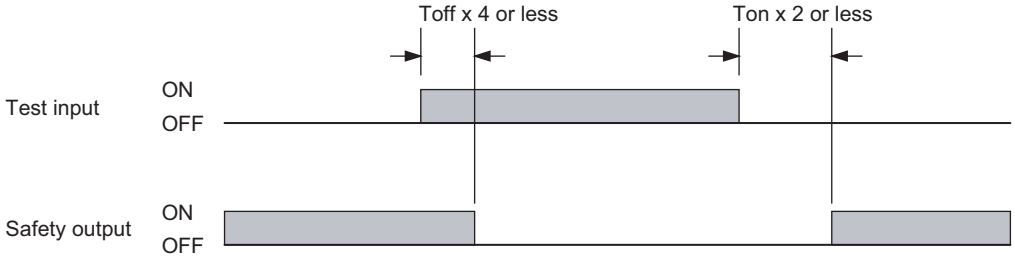

Ton: Response time of safety output's OFF to ON, Toff: Response time of safety output's ON to OFF

Response time p.17

■ Operation of the F3SJ's Indicators When External Test Function is Performed

Blanking/test indicator blinks when voltage is applied to the test input.

Self-Test Function

The F3SJ performs the self-test when power is turned ON (within 2 second, or 2.2 seconds in case of series connection) to check for errors. Also, it regularly performs the self-test (within the response time) while operating.

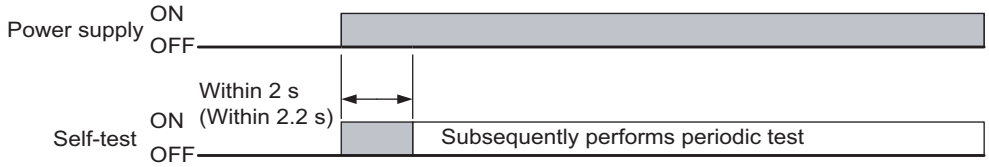

If an error is found in the self-test, the F3SJ enters lockout state, keeps the safety outputs in the OFF state, and indicates the error at the same time.

■ Self-Test Details

The self-test detects the types of errors described below.

Emitter
•Failure of emitter element or circuit
•CPU failure
•Broken or short-circuited cable

Receiver
•Abnormal external power supply voltage
•Failure of internal power supply circuit
•Failure of receiver element or detection circuit
•CPU failure
•Memory failure

•Incidence of disturbance light
•Failure of safety output circuit
•Broken or short-circuited cable

Error indication patterns and causes of errors p.184

How to reset lockout: See p.29 for basic system and p.51 for muting system

For information about lockout, see p.201

■ Waveform of Safety Outputs

When the F3SJ is receiving light, the safety outputs cyclically turn OFF as shown below to test the output circuit. When this OFF signal is fed back, the output circuit is diagnosed as normal. If the output signal does not include an OFF pulse signal, the receiver diagnoses a failure in the output circuit or wiring, and it enters lockout state. (See the table below.)

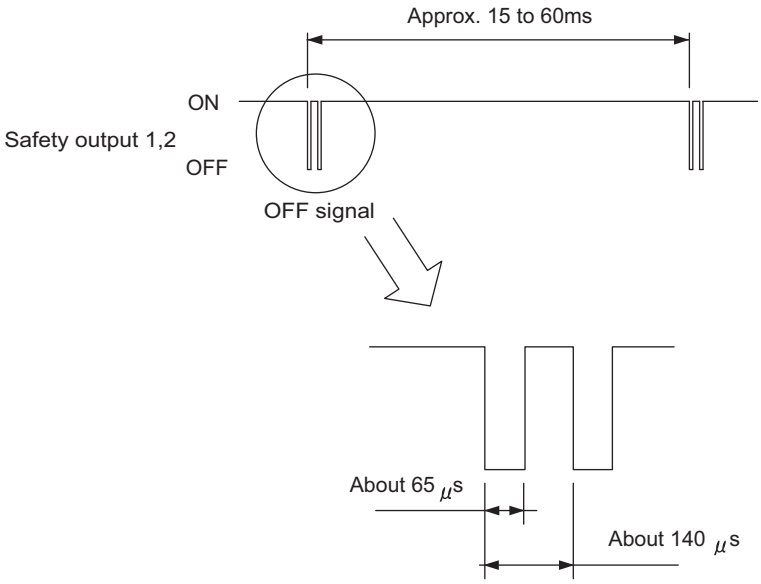

Auxiliary Output (Non-Safety Output)

The auxiliary output is used to monitor the status of the F3SJ. This output can be connected to a device such as a relay, indication lamp, programmable controller, etc.

⚠ WARNING

Do not use the auxiliary output or external indicator output for safety applications.
Human body may not be detected when F3SJ fails, resulting in serious injury.

There are 2 auxiliary outputs: auxiliary outputs 1 and 2.
•Auxiliary output 1: Inverse of safety output signals
•Auxiliary output 2: Turns ON when 30,000 hours of power-on time passes

CHECK!
Auxiliary output 1 and 2 are load current 300mA and 50mA max respectively.

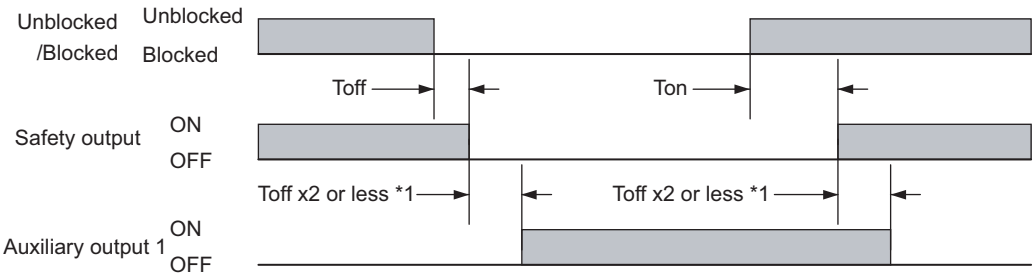

*1 When a reversed signal of safety output is assigned to the auxiliary output 2 by the setting tool, a delay time of the auxiliary output 2 from the safety output is Toff x 3 or less.

Ton: Response time of safety output's OFF to ON, Toff: Response time of safety output's ON to OFF

See p.17 for response time

■ Setting Change by the Setting Tool

Output operation mode and other attributes can be changed for the auxiliary output by the setting tool.

Auxiliary Output (Non-Safety Output) p.91

Resetting Lockout

When the cause of the lockout is removed, the lockout condition can be released by using either of the following methods.

•Cycle the power back ON

•Reset input

For manual reset, apply 9 to 24V to the reset input line for 100ms or longer, and then open the switch to apply a 0 to 1.5V signal or open circuit (pin 4/yellow).

For auto reset, set the reset line open or to 0 to 1.5V for 100ms or longer, and then apply 9 to 24V again (pin 4/yellow).

CHECK!

Lockout due to a communication error, interlock wiring error and an ABC blinking error may not be released by a reset input.

External Device Monitoring Function

This function detects malfunctions, such as welding, in external relays (or contactors) that control the hazardous zone of a machine.

This function constantly monitors that a specified voltage is applied to the receiver's external device monitoring input line, and enters lockout state when an error occurs. The relay's operational delay can be up to 0.3s(can be changed by the setting tool) without being evaluated as an error.

For example, if the (N.C.) contact is not closed and a specified voltage is not applied to the external device monitoring line within 0.3s after the safety outputs turn from ON to OFF, it is evaluated as an error and enters a lockout state.

To utilize this function properly, use safety relays and contactors that have forcibly guided or mechanically linked contact structure.

■ Wiring

Perform wiring so that 9 to 24V is applied to the external device monitoring line via the external relay's normally closed (N.C.) contact.

When external device monitoring function is not being used, apply auxiliary output 1 (output operation mode is safety output information and reverse output mode is being enabled) for which setting is not changed to the external device monitoring input or disable external device monitoring function by the setting tool.

- Wiring when external device monitoring function is used p.23
- Wiring when external device monitoring function is not used p.24

■ Timing Chart

The F3SJ reads out a device monitoring input value 0.5s or later after the power of the F3SJ is turned ON. If the status of the safety outputs is changed back to the original status within the allowable delay time, the F3SJ will not enter the lockout state.

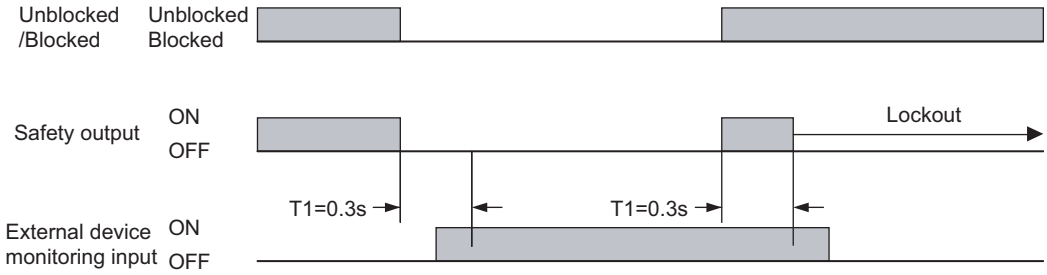

T1: Allowable delay time (can be changed by the setting tool. 0.1 to 2.5s)

■ Setting Change by the Setting Tool

Following functions can be configured by the setting tool.

External Device Monitoring Function p.98

•Disabling external device monitoring function
•Changing allowable delay time (0.1 to 2.5s)

■ Operation of the F3SJ's Internal Indicators When External Device Monitoring Function is Performed

When an input is applied to the external device monitoring input, the external device monitoring indicator turns ON.

Muting System

The muting function temporarily disables the safety function of the F3SJ, keeping the safety outputs ON even if beams are blocked. This makes it possible to install safety light curtains for AGV passage, enabling both safety and productivity. When muting, the muting indicator blinks to notify people in the surrounding zone that the safety functions are disabled. Interlock function is being disabled for factory shipment. Using the setting tool allows you to change the setting and enable the interlock function.

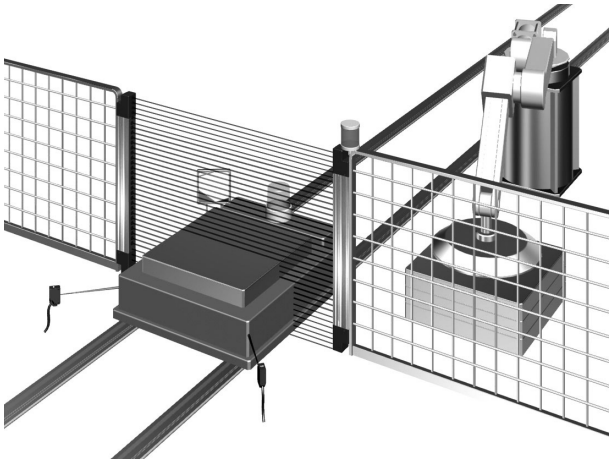

⚠ WARNING

The muting and override functions disable the safety functions of the device. You must ensure safety using other method when these functions are operating.

Muting sensors must be installed so that they can distinguish between the object that is being allowed to pass through the detection zone and a person.
If the muting function is activated by detection of a person, it may result in serious injury.

Muting lamps (external indicators) that indicate the state of the muting and override functions must be installed where they are clearly visible to workers from all the operating positions.

Upgrading F3SJ for Muting System

1. Remove the caps of the emitter and receiver.(driver comes with key cap for muting)
2. Install a muting lamp (external indicator) on either the emitter or the receiver.
3. Attach the key cap for muting to the emitter/receiver on which the muting lamp (external indicator) was not installed.

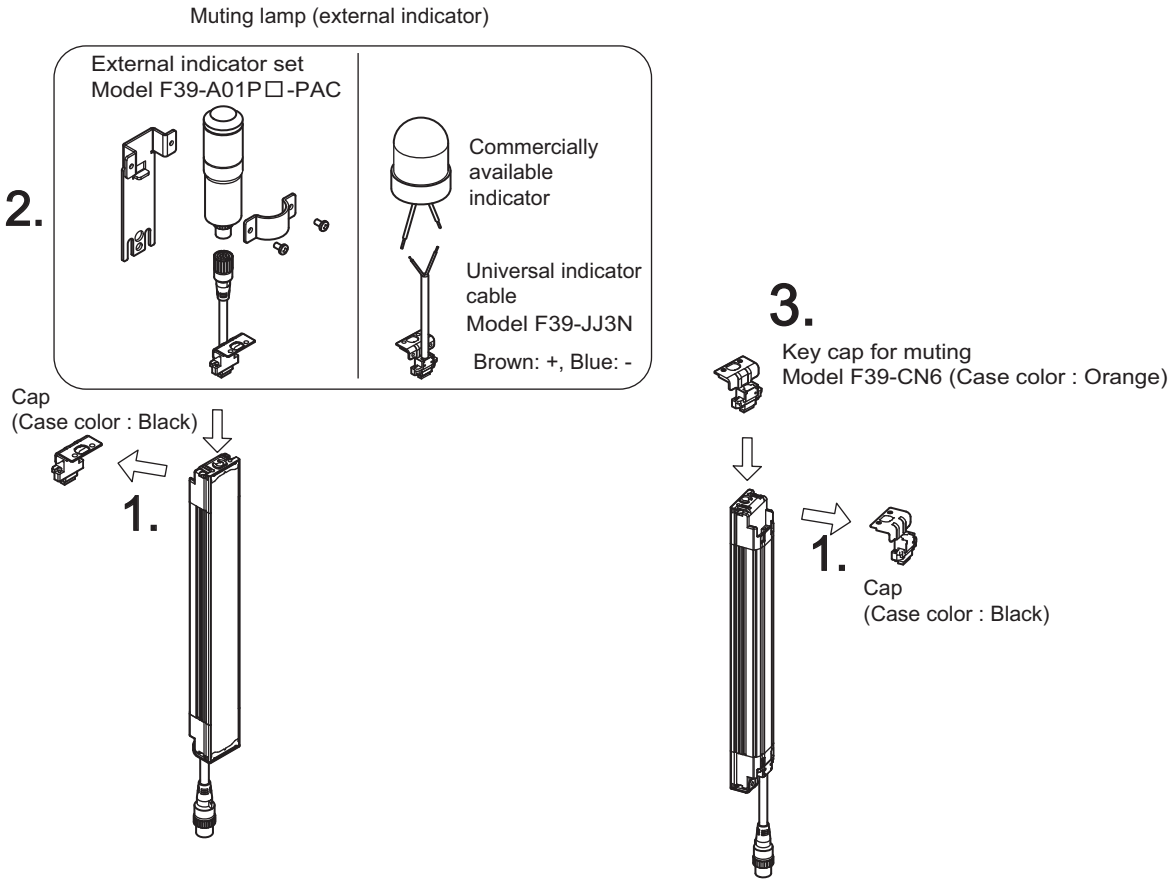

■ Muting Sensor

The muting sensor is the sensor that is the trigger for temporarily disabling the F3SJ's safety functions. Through-beam or retro-reflective photoelectric sensors, proximity sensors, or limit switches can be used as muting sensors. (recommendation: OMRON E3Z series, E2E series (3-wire type), D4N series) Use 3-wire type PNP output or N.O. type contact. Two-wire type sensor cannot be used.

■ Muting Lamp (External Indicator)

You may need a muting lamp depending on your application or as a result of a risk assessment. Before determining the use of the muting lamp, check laws and regulations of the country or region where the F3SJ-A is used and make sure of full compliance with them. For the muting lamp, use F39-A01P□-PAC, or a F39-JJ3N universal indicator cable and a commercially available external indicator. Enabling external indicator output diagnosis function allows breakage and short circuit detection of external indicator or muting lamp connected to the output.

Recommended External Indicators p.124
External Indicator Output Diagnosis Function p.95

■ Setting Change by the Setting Tool

Following functions can be configured by the setting tool.

See p.77 for details.

•Selecting muting mode (for the PC tool for F3SJ only)
•Selecting muting range
•Teaching muting beams
•Specifying muting beams manually
•Setting muting time limit
•Enabling Interlock Function

Muting Function p.77
Interlock Function p.96

■ F3SJ's Indicators

•Muting input 1 indicator turns ON when an input is applied to muting input 1.
•Muting input 2 indicator turns ON when an input is applied to muting input 2.
•Muting input 1 and 2 indicators blink while muting overriding.
•Receiver's muting error indicator turns ON when a muting error occurs.

Wiring Diagrams p.36

• Where to attach the included labels

F39-CN6 key cap for muting includes internal indicator label (1).
When muting system is used, affix the label (1) in a location so that the arrows are aligned with the portion of the internal indicator indicated by the shaded zones.

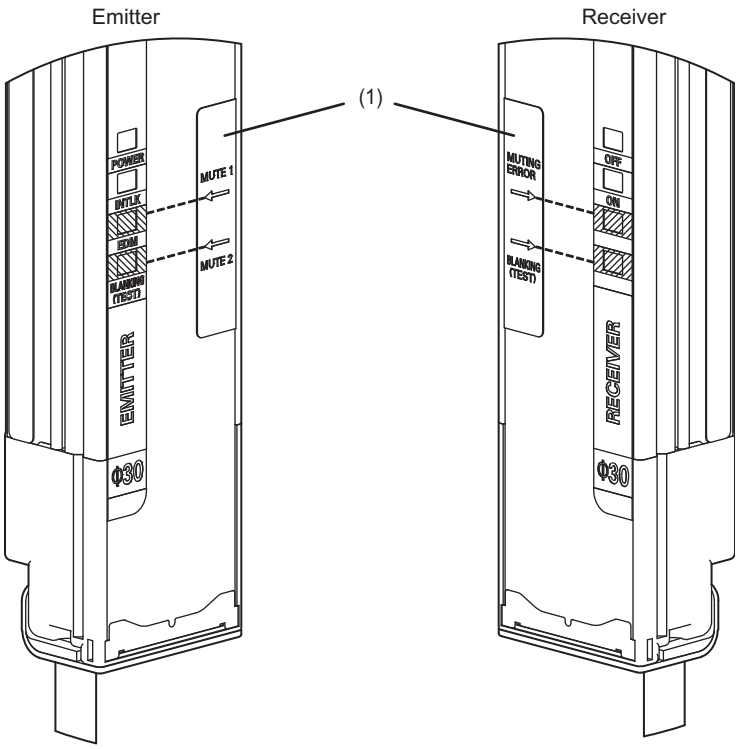

Standard Muting Mode

Operation mode configured for F3SJ factory shipment.Turning muting inputs 1 and 2 ON with time difference enables muting function.

For details of setting change, see Muting in Chapter 3.

Muting Function p.77

■ Start Conditions

If both of the following 2 conditions are present for the F3SJ, muting is activated.

1. No interrupting object is found in the F3SJ's detection zone, and safety outputs are ON.
2. After muting input 1 is turned ON (connected to 9 to 24V), muting input 2 is turned ON (connected to 9 to 24V) within the muting input time limit of T1min to T1max (0.03 to 3s).

Muting function can be enabled in up to 0.15s *1 after the condition 2 is satisfied. If condition 1 is satisfied but the time requirement of condition 2 is not, a muting error occurs, and the receiver's muting error indicator turns ON. However, when there is a muting error, the F3SJ safety function operates and normal operation continues.

Muting error can be released by any of following conditions:

•When muting is started by the proper muting sequence (start conditions 1 and 2 are performed in order).

•Power cycle under muting input 1 and 2 OFF state.

■ End Conditions

If either of the following conditions are satisfied, the muting state is released.

•Muting input 1 or 2 turns OFF at T3 or later (0.1s or later).

•The muting continuation time exceeds the muting time limit of T2 (60s). (The PC tool for F3SJ or setting console can be used to change this time to between 1 and 600 sec., or it can be set to have no time limit.)

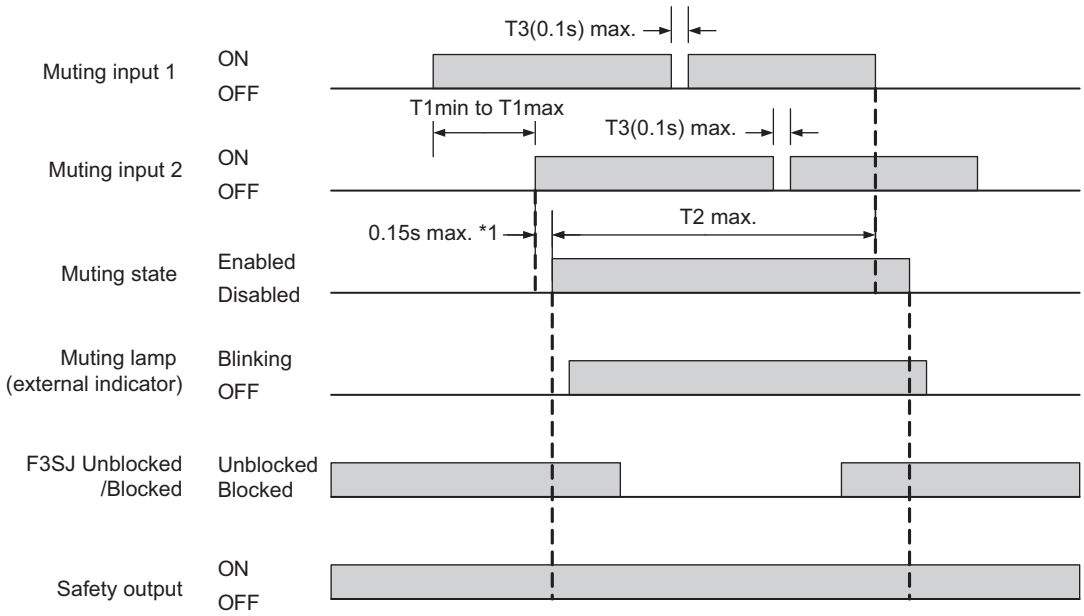

*1 The value is applied to a single sensor. Values for connected sensors are:

# of connections	*1 Value (s)
Single	0.15
2 connected	0.26
3 connected	0.29
4 connected	0.32

• T1min: Muting input time limit (minimum value)
This is set to 0.03 sec., the minimum value for the input time difference between muting input 1 and 2. A muting error occurs when the input time difference between muting input 1 and 2 is less than this value.

•T1max: Muting input time limit (maximum value)
This is set to 3 sec., the maximum value for the input time difference between muting input 1 and 2. Minimum value must be less than maximum value.

•T2: Muting time limit
This is set to 60 sec., the muting function continuation time. When this muting state exceeds this time, muting is released.

•T3: Muting input time with allowable waveform cracks
This is the maximum value for the waveform cracks allowed for muting input 1 and 2 when muting is in effect. It is set to 0.1 sec.

CHECK!

Muting state can be released if a sensor transitions to lockout as well.

The values shown below can be changed using the PC tool for F3SJ.
•T1min: Muting input time limit (minimum value)
•T1max: Muting input time limit (maximum value)
•T2: Muting time limit

The values shown below can be changed using the setting console.
•T2: Muting time limit

Muting function p.87

Wiring Diagrams

■ Wiring When Using Muting and External Device Monitoring Function

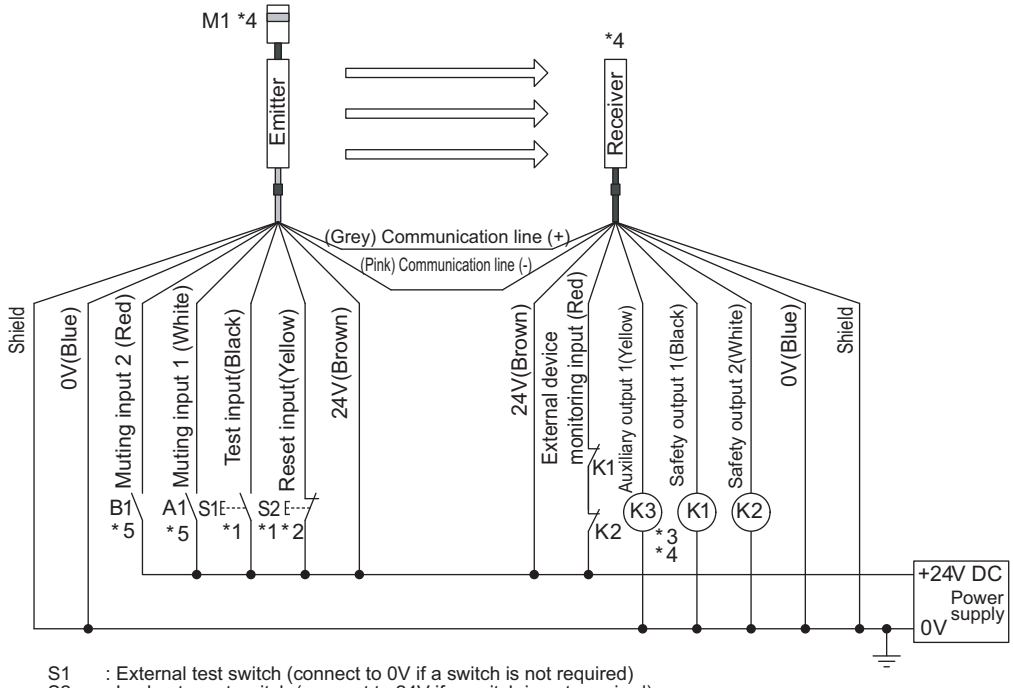

S1 : External test switch (connect to 0V if a switch is not required)
S2 : Lockout reset switch (connect to 24V if a switch is not required)
A1 : Contact by muting sensor A1
B1 : Contact by muting sensor B1
K1,K2 : Relay or other device that controls hazardous parts of the machine
K3 : Load or PLC, etc. (for monitoring)
M1 : Muting lamp

*1 Use a switch for micro loads (Input specifications: 24V, 1.0mA or less)
*2 Can work as an interlock reset switch when interlock function is used. (Configuration by the setting tool is required)
*3 F3SJ operates even when K3 is not connected.
*4 Connect a muting lamp to either of external indicator output or auxiliary output 1 of an emitter or a receiver.
To connect a muting lamp to the auxiliary output 1, setting must be changed by the setting tool.
*5 Two-wire type sensor cannot be used.

■ Wiring When External Device Monitoring Function Is Not Required

1.Disabling external device monitoring function by the setting tool

Or

2.The external device monitoring function is disabled by connecting auxiliary output 1 and external device monitoring input as shown below, when auxiliary output 1 settings have not been changed (output operation mode is "safety output information" and reverse output mode is "enabled").

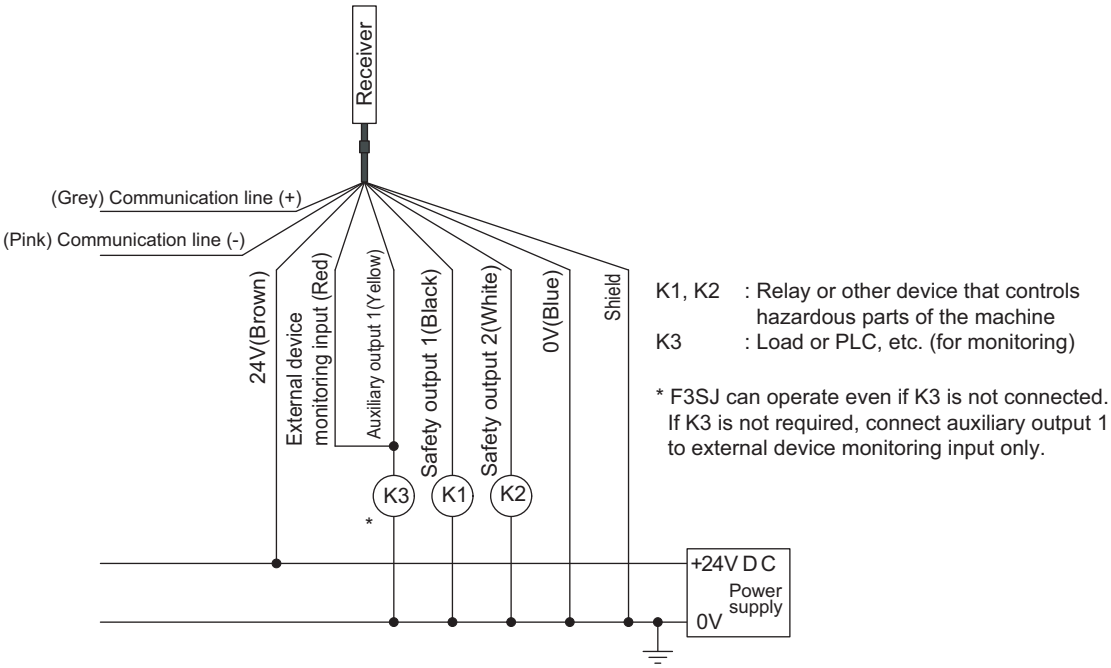

■ Ref.: Minimum Wiring Required to Check the Operation of the F3SJ When Using the Muting Function

(Wiring that does not use the external device monitoring function)

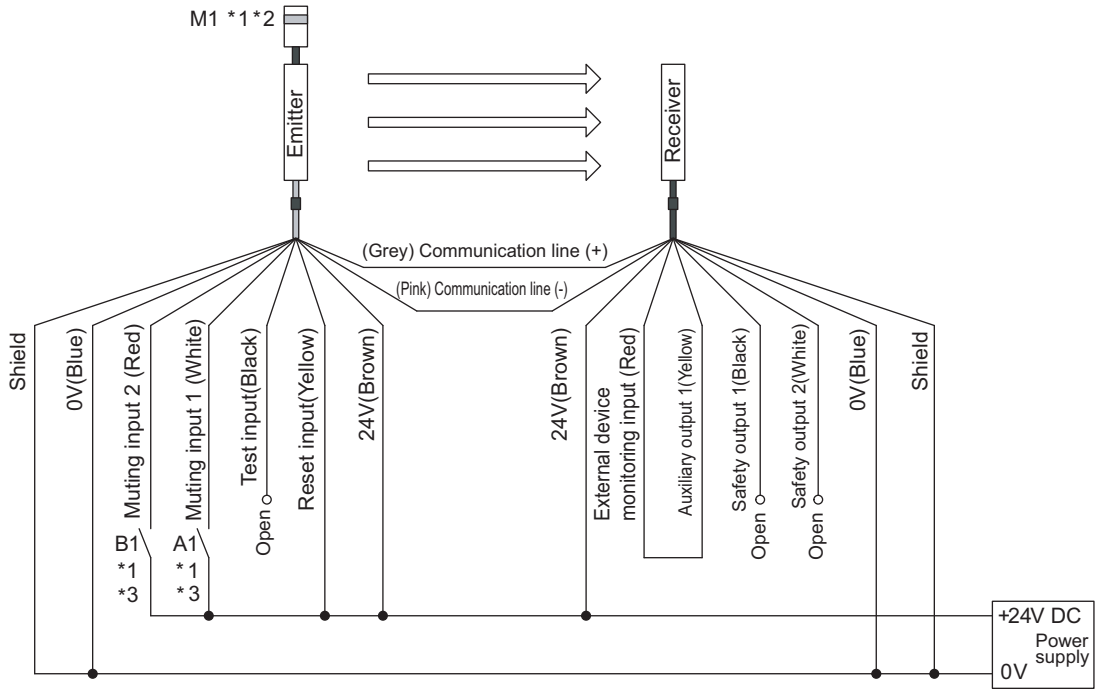

A1 : Contact by muting sensor A1
B1 : Contact by muting sensor B1
M1 : Muting lamp

*1 When the muting function's operation check is not performed, it can work if this is open.
*2 Connect either the emitter or receiver to the muting lamp.
*3 Two-wire type sensor cannot be used.

Installation Standard for Muting Sensors

- Set the muting sensors so that they can detect all of the passing detection objects (palettes, automobiles, etc.). Do not install in a position so that only the front or rear end of the detection object is detected.
- Set the muting sensors so that they detect the objects even when they are loaded on palettes or other transport devices.
- Also, install the F3SJ and muting sensors so that each object passes through all muting sensors before the next object arrives at the first muting sensor. Also, install all F3SJ and muting sensors so that no person is able to accidentally enter the hazardous zone while the muting function is enabled.
- If objects' speeds can vary, muting time limit must be taken into consideration.

Installation Example 1 of Standard Muting Mode (using 2 muting sensors)

This is an example of 2 retro-reflective type photoelectric sensors used as muting sensors installed in a cross pattern.
Use 2 sensors when the length L of the workpieces are not constant or are insufficient.

1. Before a workpiece passes through

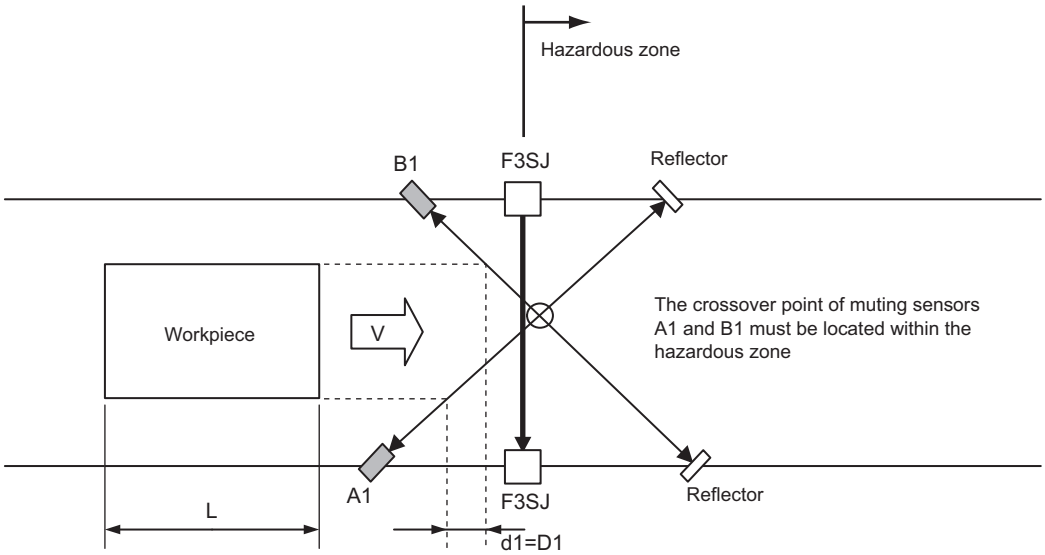

L: Length of workpiece
d1: Maximum distance required for the muting sensor to keep the muting function enabled
D1: Minimum distance required for the muting sensor to keep the muting function enabled

The output state of muting sensors A1 and B1 are both OFF (contacts A1 and B1 are open due to muting output), and the safety function of the F3SJ is working.
In this example where 2 muting sensors are used, the crossover point of muting sensors A1 and B1 must be located in the hazardous zone. This configuration prevents the muting function from being enabled by a person passing through the crossover point.

2. The muting sensor outputs are turned ON (muting inputs are HIGH) and the safety function of the F3SJ is disabled.

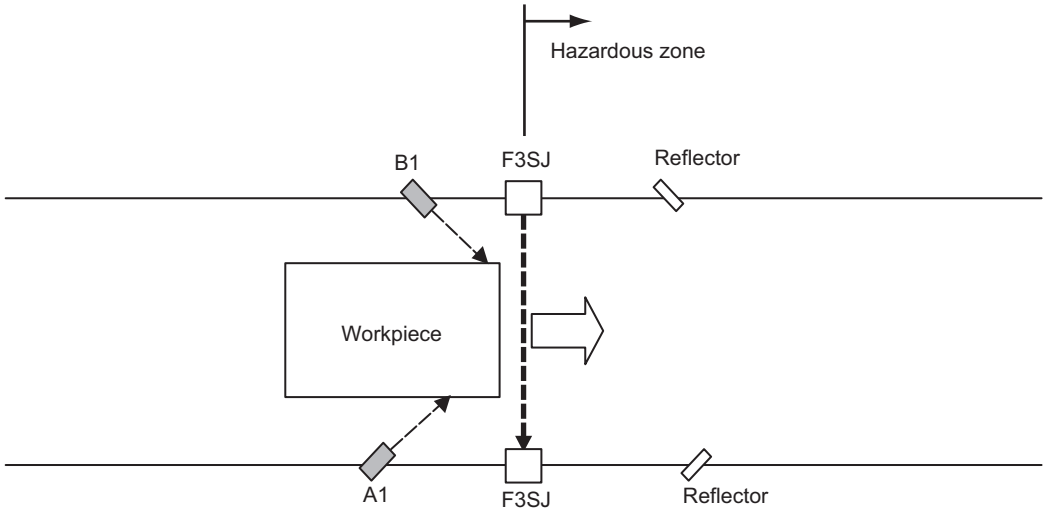

When muting sensors A1 and B1 are turned ON in this order, the muting function is enabled. In this state, the safety function of the F3SJ is disabled.

3. The muting sensor outputs are turned ON (muting inputs are HIGH) and the safety function of the F3SJ is disabled.

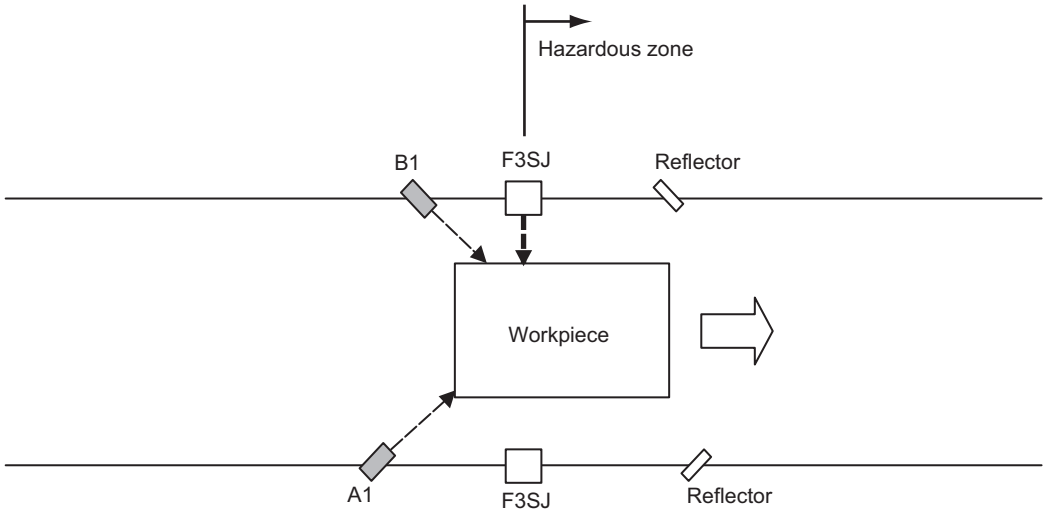

The F3SJ is blocked but the safety function is disabled by the muting function, and safety outputs 1 and 2 are turned ON.

4. The muting function is released

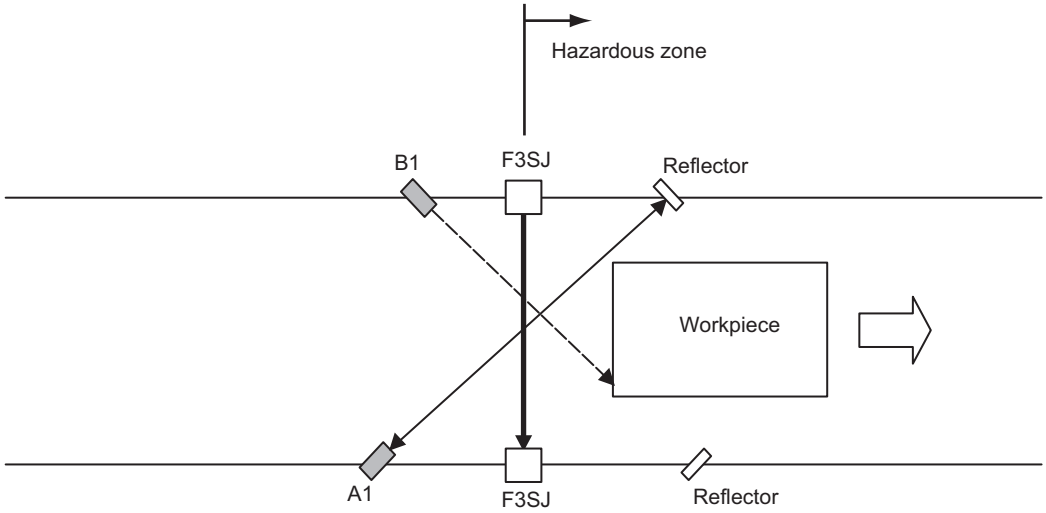

Muting sensor A1 is turned OFF, the muting function is released, and the safety function of the F3SJ is enabled.

■ Installation Distance

The minimum distance, D1 [m], required for muting sensors to keep the muting function enabled is

D1 < L . . . . . Formula (1)

L [m] : Length of a workpiece

The maximum distance, d1 [m], required for muting sensors to keep the muting function enabled is

V x T1min < d1 < V x T1max . . . . . Formula (2)

V [m/s] : Approach speed of a workpiece

T1min [s] : Muting input time limit value (minimum). 0.03s.

T1max [s] : Muting input time limit value (maximum). 3s.

Use the PC tool for F3SJ to change following values:

•T1min: Muting input time limit value (minimum)

•T1max: Muting input time limit value (maximum)

Muting function p.87

To enable the muting function, D1 and d1 must satisfy formulas (1) and (2), respectively.

This distance must prevent the muting function from being enabled by a person passing through the muting sensors.

Also, install the F3SJ and muting sensors so that a workpiece passes through all muting sensors before the next workpiece arrives at the muting sensors.

■ Wiring Diagrams

Using a photoelectric switch as a muting sensor

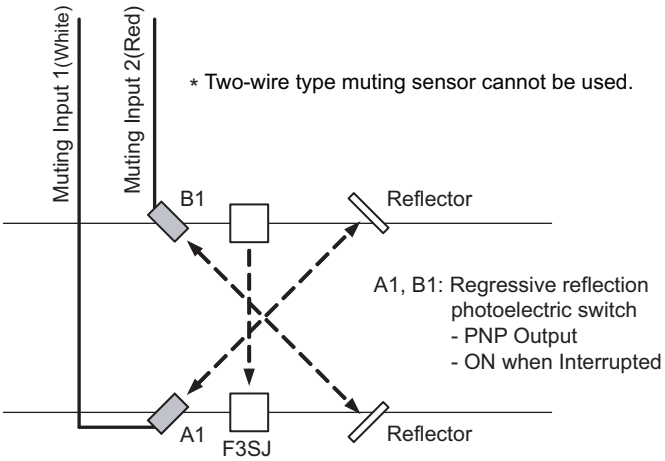

Using an N.O contact type switch as a muting sensor

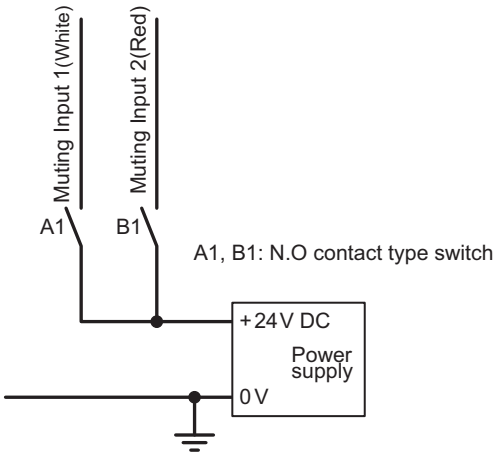

■ Timing Chart

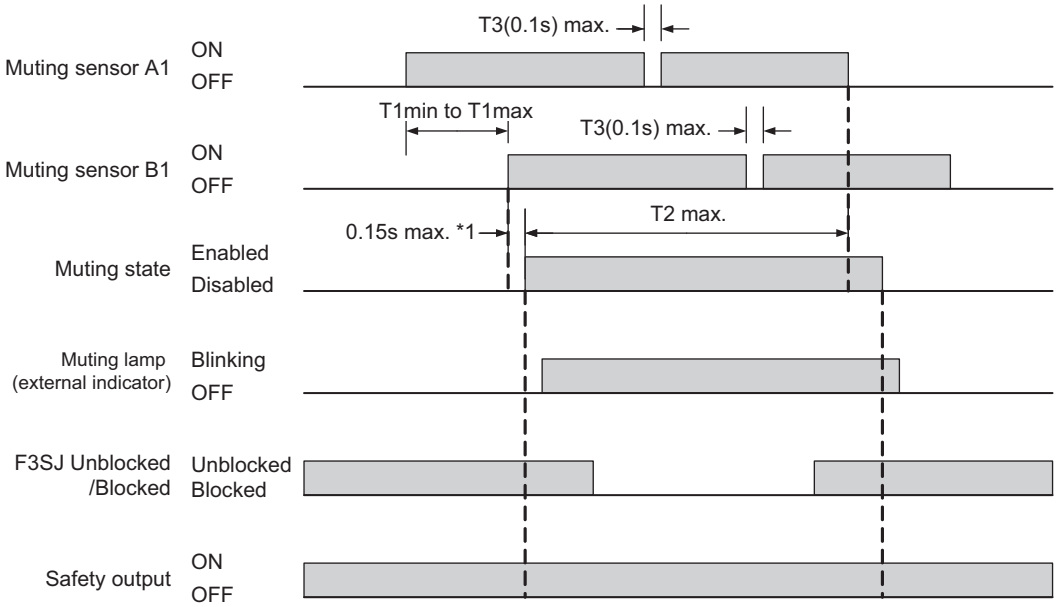

*1 The value is applied to a single sensor. Values for connected sensors are:

# of connections	*1 Value (s)
Single	0.15
2 connected	0.26
3 connected	0.29
4 connected	0.32

•T1min: Muting input time limit (minimum value)
This is set to 0.03 sec., the minimum value for the input time difference between muting input 1 and 2. A muting error occurs when the input time difference between muting input 1 and 2 is less than this value.

•T1max: Muting input time limit (maximum value)
This is set to 3 sec., the maximum value for the input time difference between muting input 1 and 2.

•T2: Muting time limit
This is set to 60 sec., the muting function continuation time. When this muting state exceeds this time, muting is released.

•T3: Muting input time with allowable waveform cracks
This is the maximum value for the waveform cracks allowed for muting input 1 and 2 when muting is in effect. It is set to 0.1 sec.

Installation Example 2 of Standard Muting Mode (using 4 muting sensors)

This installation example uses 4 through-beam type photoelectric sensors as muting sensors.
The use of 4 muting sensors is useful when the length of the workpieces (L) is constant or longer.

1. Before a workpiece passes through

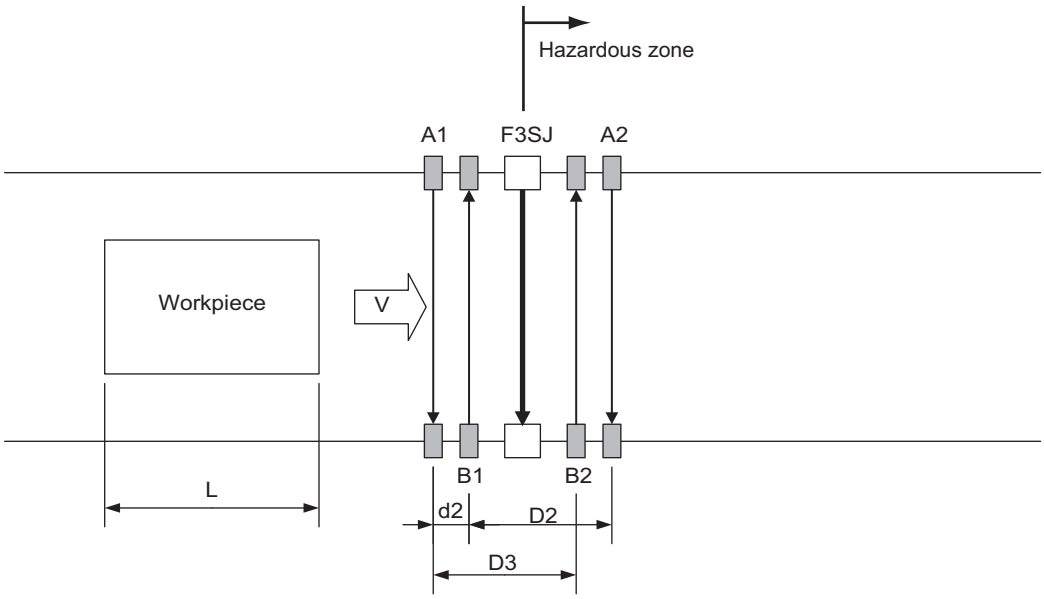

d2: Maximum distance required for the muting sensor to keep the muting function enabled
D2, D3: Minimum distances required for the muting sensor to keep the muting function enabled

All muting sensors are turned OFF and the safety function of the F3SJ is working.

2. The muting sensors are blocked and the safety function of the F3SJ is disabled

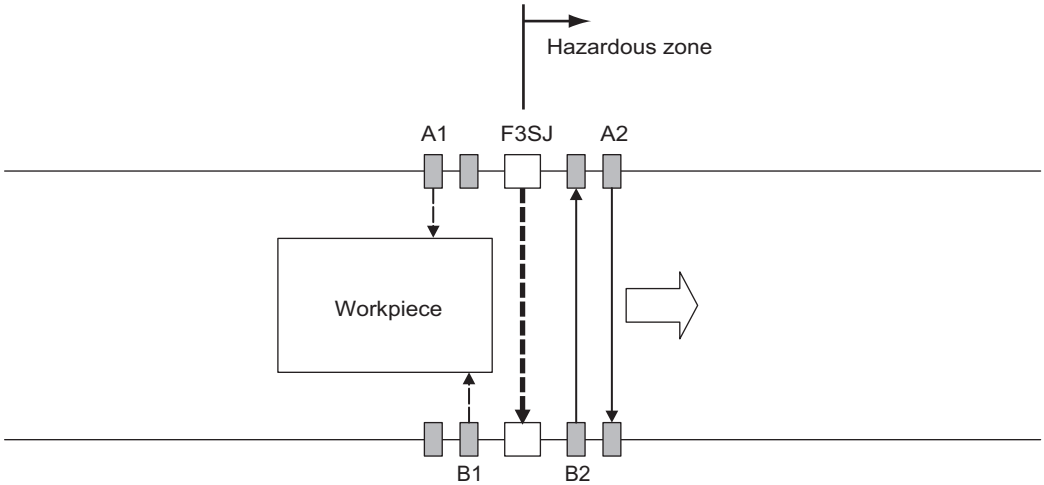

When muting sensors A1 and B1 are turned ON in this order, the muting function is enabled. In this state, the safety function of F3SJ is disabled.

3. The muting sensors are blocked and the safety function of the F3SJ is disabled

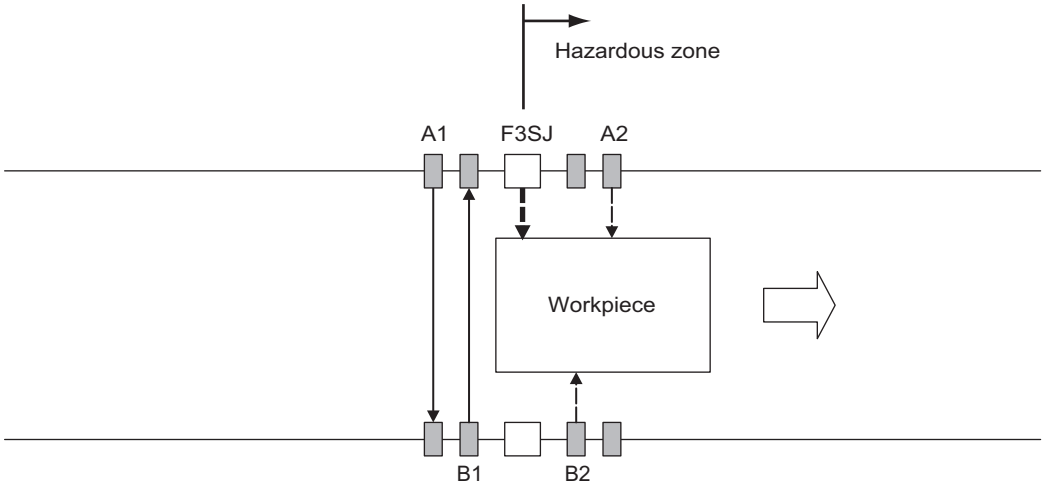

Muting sensors A1 and B1 are turned OFF but A2 and B2 are ON, so the muting function is still working. Safety outputs 1 and 2 are turned ON.

4. The muting function is released

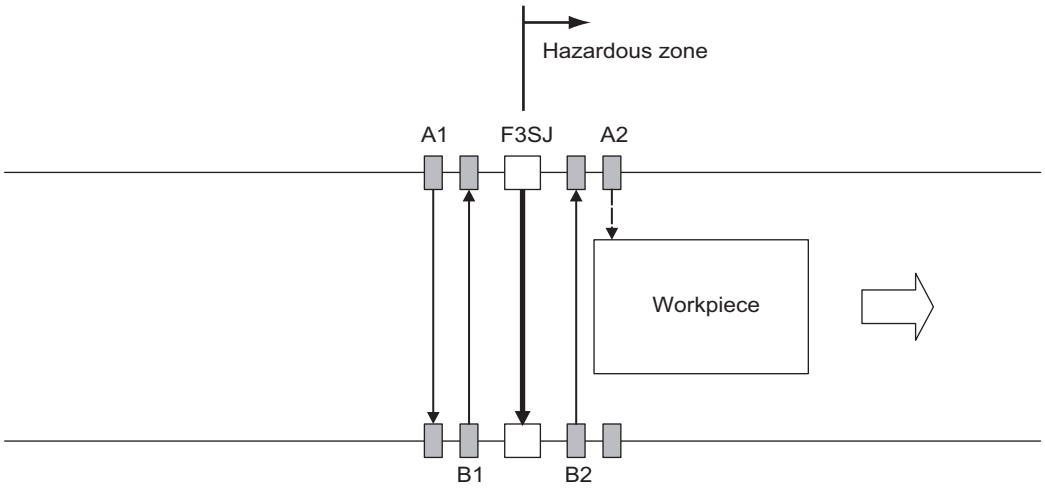

Muting sensor A2 is turned OFF and the muting function is released, and the safety function of the F3SJ is working.

■ Installation Distance

The minimum distances, D2 [m] and D3 [m], required for the muting sensors to keep the muting function enabled are

D2 < L . . . . . Formula (3)

D3 < L . . . . . Formula (4)

L [m] : Length of a workpiece

The maximum distance, d2 [m], required for muting sensors to keep the muting function enabled is

V x T1min < d2 < V x T1max . . . . . Formula (5)

V [m/s] : Approach speed of a workpiece

T1min [s] : Muting input time limit value (minimum). 0.03s.

T1max [s] : Muting input time limit value (maximum). 3s.

Use the PC tool for F3SJ to change following values:
T1min: Muting input time limit value (minimum)
T1max: Muting input time limit value (maximum)

Muting function p.87

To enable the muting function, D2, D3, and d2 must satisfy formulas (3), (4), and (5), respectively. This distance must prevent the muting function from being enabled by a person passing through the muting sensors. Also, install the F3SJ and muting sensors so that a workpiece passes through all muting sensors before the next workpiece arrives at the first muting sensor.

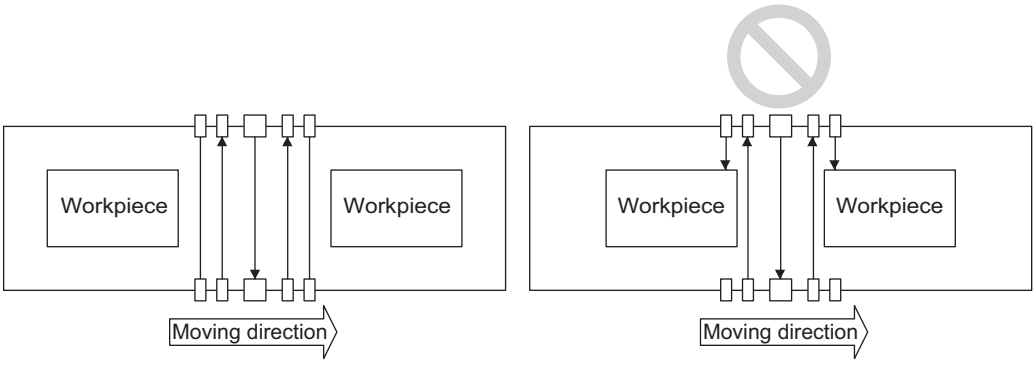

■ Wiring Diagrams

Using a photoelectric switch as a muting sensor

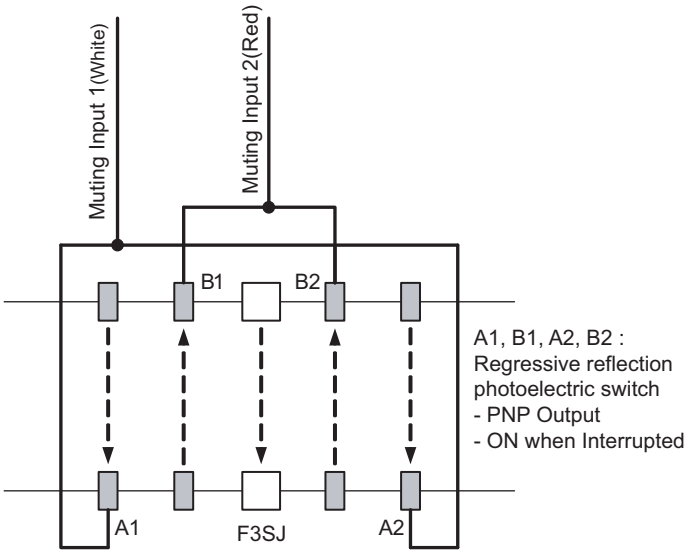

Using an N.O contact type switch as a muting sensor

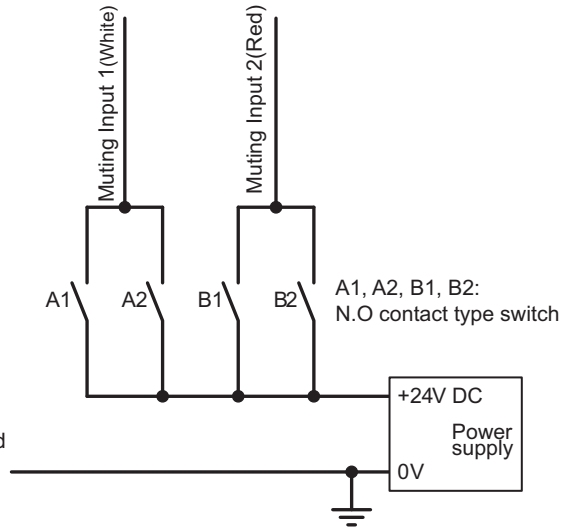

* Two-wire type muting sensor cannot be used.

■ Timing Chart

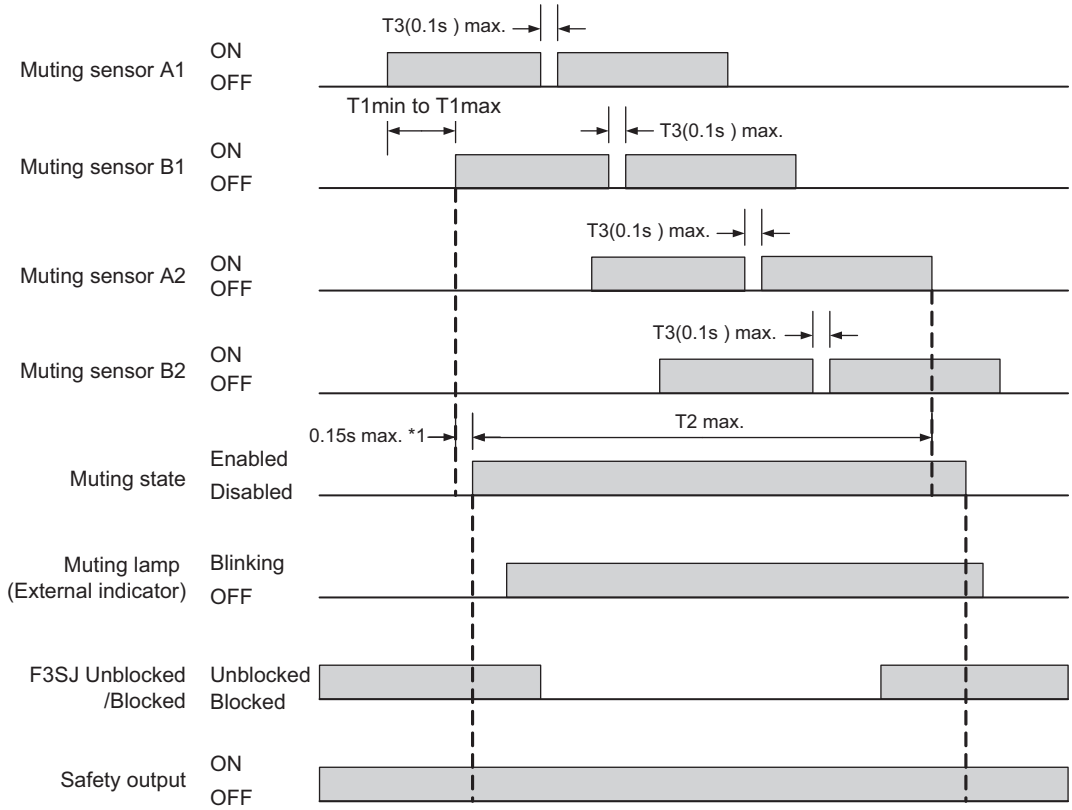

*1 The value is applied to a single sensor. Values for connected sensors are:

# of connections	*1 Value (s)
Single	0.15
2 connected	0.26
3 connected	0.29
4 connected	0.32

•T1min: Muting input time limit (minimum value)
This is set to 0.03 sec., the minimum value for the input time difference between muting input 1 and 2. A muting error occurs when the input time difference between muting input 1 and 2 is less than this value.

•T1max: Muting input time limit (maximum value)
This is set to 3 sec., the maximum value for the input time difference between muting input 1 and 2.

•T2: Muting time limit
This is set to 60 sec., the muting function continuation time. When this muting state exceeds this time, muting is released.

•T3: Muting input time with allowable waveform cracks
This is the maximum value for the waveform cracks allowed for muting input 1 and 2 when muting is in effect. It is set to 0.1 sec.

■ Reference: Bidirectional Muting

Shown below is an example of bidirectional muting with 4 retro-reflective photoelectric sensors.
It can be used for applications of workpiece approaching from both directions.
Connect outer muting sensors A1 and A2 to the muting input 1 and inner muting sensors B1 and B2 to the muting input 2.

1. Workpiece approaching from the left

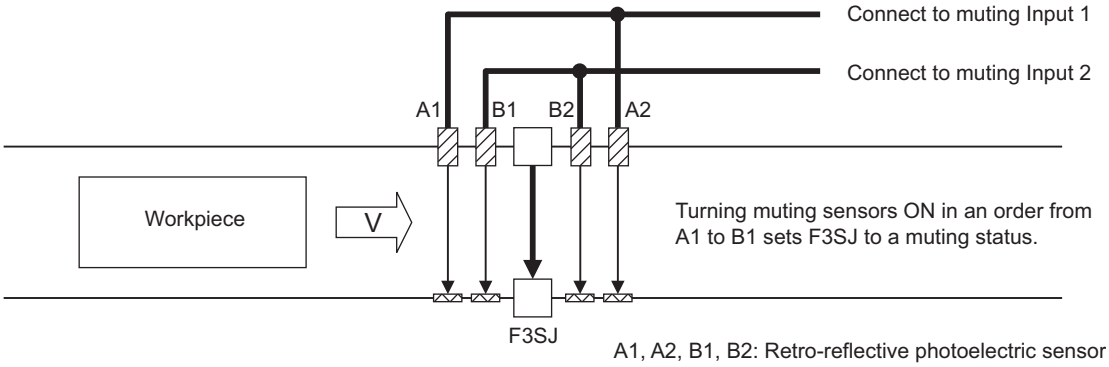

2. Muting from an opposite direction is available as well

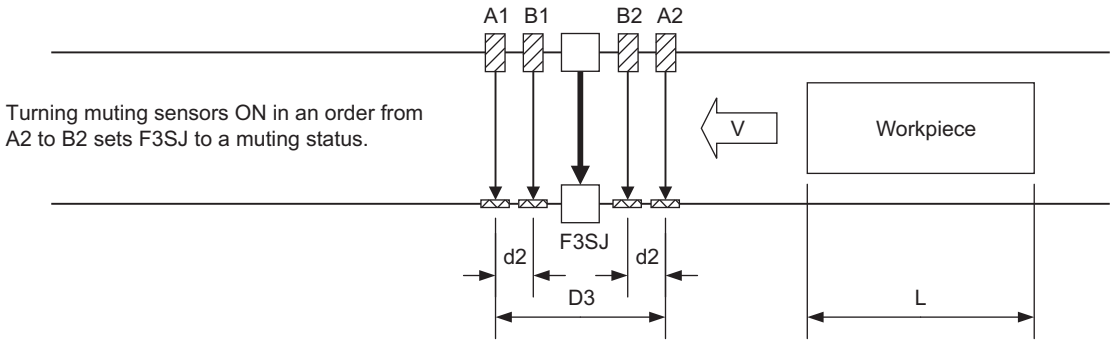

This arrangement example uses regressive reflection type E3Z-R□□ series as a muting sensor. Arrangement must take mutual interference into account.
Muting sensors must be installed so that a distance D3 between muting sensors A1 and A2 should be smaller than workpiece length L.
As a muting sensor, a transmission or regressive reflection type photoelectric switch, proximity switch (3-wire type), or limit switch can be used. Two-wire type muting sensor cannot be used.

Distances d2 & D2 between muting sensors: p.43

■ Reference: Preventing light interference of muting sensor

When a photoelectric sensor is used as a muting sensor, light interference may cause a muting error of F3SJ. Light interference may occur due to:

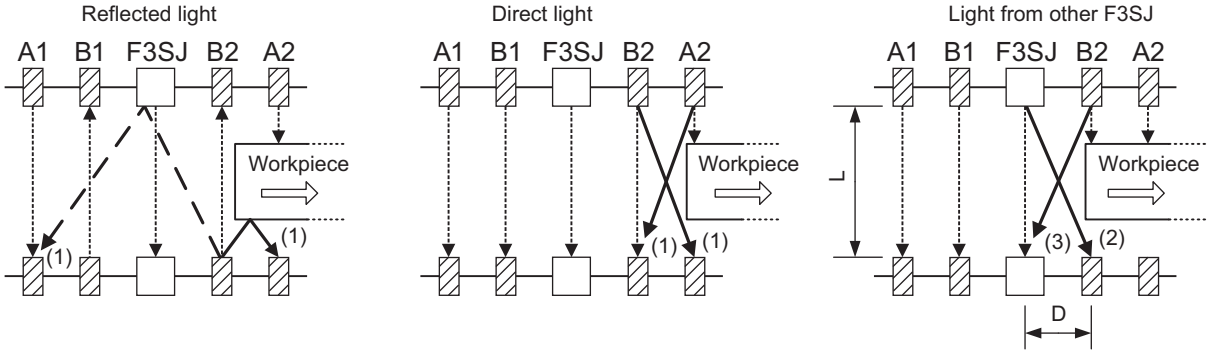

(1) Interference between muting sensors
- Use sensors with mutual interference prevention (such as retro-reflective E3Z-R□□ series)
- Use laser-type sensors (such as laser-type E3Z-LR□ series)
- Take distance from a sensor causing the interference
- Displace beams for each other to prevent interference (change installation height or place them crosswise)
- Install a barrier
- Attach interference prevention filter (provided for E3Z series as accessories)
- Attach a slit to reduce light intensity (provided for E3Z series as accessories)
- Lower the sensitivity
- Reduce a distance between a workpiece and a muting sensor to prevent reflected light from a workpiece

(2) Interference to a muting sensor from F3SJ
- Configure an operating range of F3SJ by the setting tool
- Take distance (D) from a sensor causing the interference
- Displace beams for each other to prevent interference (change installation height or place them crosswise)
- Install a barrier
- Arrange sensors in alternation
- Lower the sensitivity

(3) Interference from a muting sensor to F3SJ
- Use a red LED type sensor (such as retro-reflective E3Z-R□□ series)
- Use laser-type sensors (such as laser-type E3Z-LR□ series)
- Take distance (D) from a sensor causing the interference
- Displace beams for each other to prevent interference (change installation height or place them crosswise)
- Install a barrier
- Arrange sensors in alternation
- Attach a slit to reduce light intensity (provided for E3Z series as accessories)

Mutual interference between a muting sensor and F3SJ in (2) and (3) above can be prevented by configuring D satisfying a formula shown below:

- If L = 0.2 to 3m D = 0.26m or larger
- If L = 3m or larger D = L x tan5° = L x 0.088m or larger

L : Distance between an emitter and a receiver of F3SJ
D : Distance between a muting sensor and F3SJ

Override Function

The override function forcibly turns the safety outputs ON when the muting start condition is not satisfied. If a workpiece stops while passing through the detection zone of the F3SJ, as shown below, causing a muting error, the normal state cannot be recovered unless the workpiece is removed from the muting sensors and the detection zone of the F3SJ. However, the override function will mute the safety outputs of the F3SJ so that the conveyor can be restarted to move the workpiece out of the muting sensors and F3SJ detection zone.

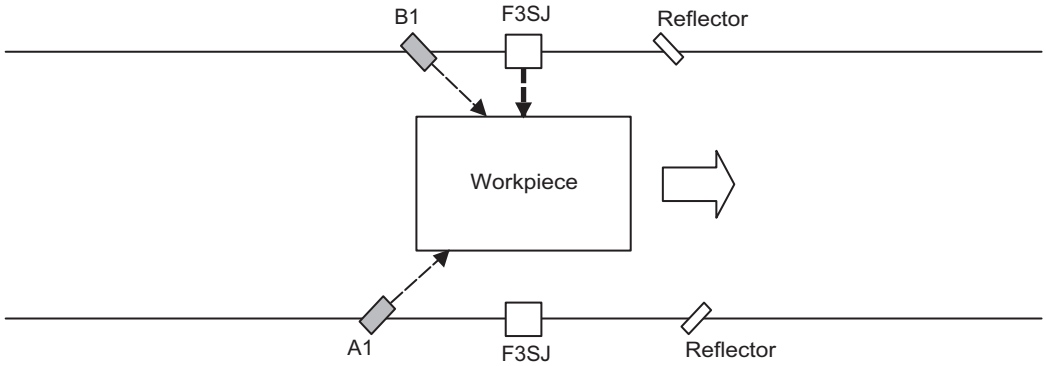

The override function can be enabled for up to 60s. (The setting tool can be used to change this time to between 1 and 600 sec.)
The muting lamp (external indicator) blinks while overriding. (The setting tool can be used to change this setting.)

⚠ WARNING

The muting and override functions disable the safety functions of the device. You must ensure safety using other method when these functions are operating.

Muting lamps (external indicators) that indicate the state of the muting and override functions must be installed where they are clearly visible to workers from all the operating positions.

Install the switch that uses hold-to-run device such as a spring-return key switch and is installed in a location that provides a clear view of the entire hazardous zone and where it cannot be activated from within the hazardous zone. Make sure that nobody is in the hazardous zone before activating the override function.

■ Override Start Conditions

If all of the following conditions are present in the F3SJ, the override function starts. The override function can be put into effect even when there is a muting error.

1. If either muting input 1 or 2 is ON (1 or more muting sensors are turned ON by a workpiece)
2. The F3SJ is blocked and the output is OFF
3. Under the conditions of 1 and 2 shown above, the reset input changes from ON to OFF and the test input changes from OFF to ON at the same time. The changing time of these 2 inputs must be 0.3s or less.

■ Override End Conditions

When either of the following conditions is satisfied, the function is released.

•When 60 seconds has elapsed under the override state (The setting tool can be used to change this time to between 1 and 600 sec.)
•All muting sensors are turned OFF
•When the reset input is turns from OFF to ON and/or the test input turns from ON to OFF

CHECK! Override state can be released if a sensor transitions to lockout as well.

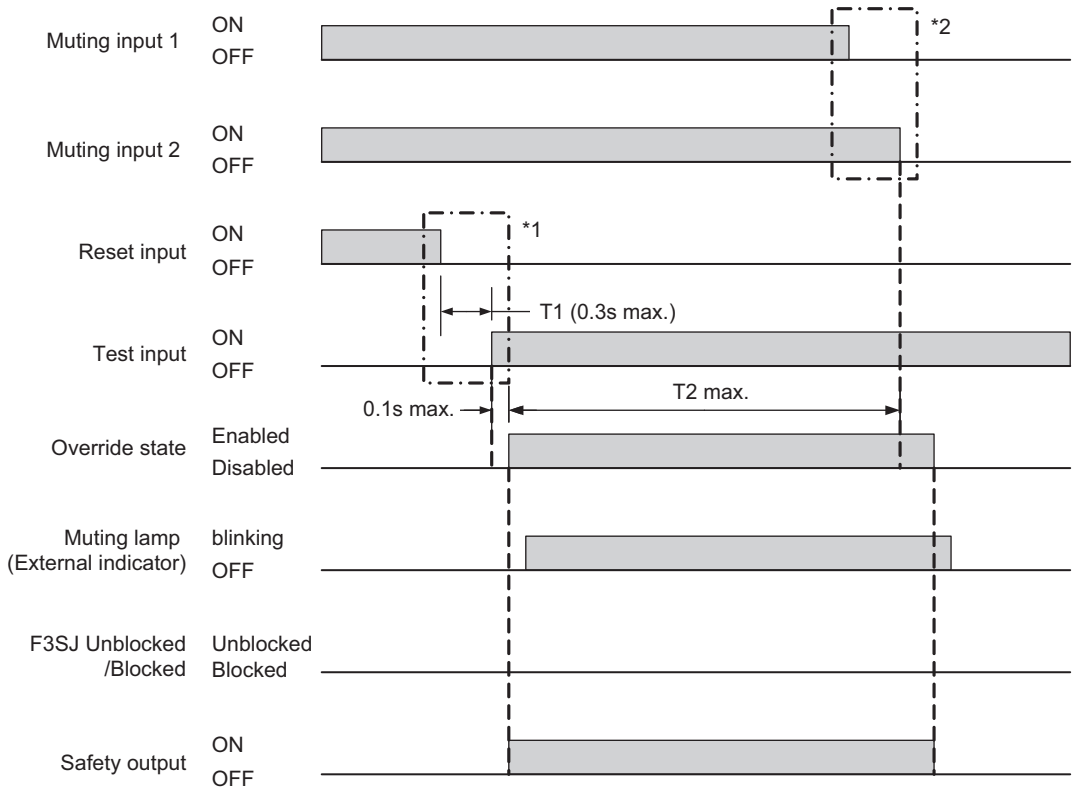

*1 Order of reset input ON -> OFF and test input OFF -> ON can be arbitrary for override start conditions.
(Switching time difference must be within 0.3s)
*2 There are 3 override end conditions. For details, see override end conditions.

- T1: Override Input Time Limit
Maximum value of input time difference between reset input ON -> OFF and test input OFF -> ON It is set as 0.3s.
- T2: Override Time Limit
Continuance time of overriding (60s: can be changed by the setting tool) If override state exceeds this time, the function is canceled.

■ Setting Change by the Setting Tool

Functional setting is available through the setting tool.

For details, see p.88

•Setting override time limit

■ Operation of the F3SJ's Internal Indicators When Override Function Is Performed

•Muting input 1 indicator turns ON when an input is applied to muting input 1.
•Muting input 2 indicator turns ON when an input is applied to muting input 2.
•Muting input 1 and 2 indicators blink while muting overriding
•Muting error indicator turns ON when a muting error occurs.

External Test Function

This function forcibly stops the emission using an external signal. It can be used to verify that the safety system should stop properly when the F3SJ is interrupted.
To stop the emission, apply 9 to 24V to the emitter's test input line. The voltage must be applied for a period 0.3s plus 4 times of Toff or longer.

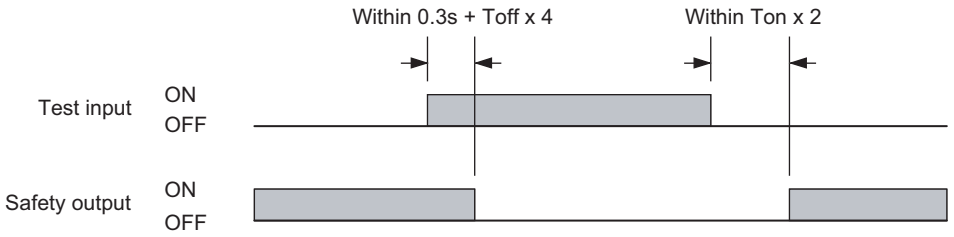

Ton: Response time of safety output's OFF to ON, Toff: Response time of safety output's ON to OFF

Response time p.17

■ Operation of the F3SJ's Internal Indicators When External Test Function Is Performed

Blanking/test indicator blinks when voltage is applied to the test input.

Self-Test Function

The F3SJ performs the self-test when power is turned ON (within 2 second, or 2.2 seconds in case of series connection) to check for errors. Also, it regularly performs the self-test (within a response time) while operating.
The timing chart is the same as the one for the basic system. For details, see the following the page.

p.27

Auxiliary Output (Non-Safety Output)

The auxiliary output is used to monitor the status of the F3SJ. This output can be connected to a device such as a relay, indication lamp, programmable controller, etc.

⚠ WARNING

Do not use the auxiliary output or external indicator output for safety applications. Human body may not be detected when F3SJ fails, resulting in serious injury.

Auxiliary output 1 provides an inverted signal of the safety output. (Factory Shipment) To connect a muting lamp to the auxiliary output 1, use the setting tool to configure output operation mode as "muting/override information" and connect it to the auxiliary output 1.

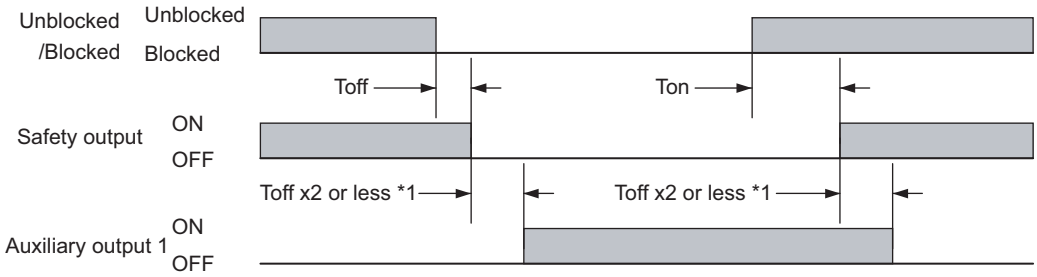

*1 When a reversed signal of safety output is assigned to the auxiliary output 2 by the setting tool, a delay time of the auxiliary output 2 from the safety output is Toff x 3 or less.

Ton: Response time of safety output's OFF to ON, Toff: Response time of safety output's ON to OFF

Response time p.17

■ Setting Change by the Setting Tool

Output operation mode and other attributes can be changed for the auxiliary output by the setting tool.

See p.91 for details.

Resetting Lockout

When the cause of the lockout is removed, the lockout condition can be released by using either of the following methods.

•Cycle the power back ON

•Set the reset input line open or to 0 to 1.5V for 100ms or longer, and then apply 9 to 24V again.

CHECK!

Lockout due to a communication error, muting wiring error and an ABC blinking error may not be released by a reset input.

External Device Monitoring Function (EDM)

This function detects malfunctions, such as welding, in external relays (or contactors) that control the hazardous zone of a machine.

The timing chart is the same as that for the basic system. For details, refer to the page shown below.

External Device Monitoring Function p.30

For the wiring diagram, refer to the page shown below.

Wiring Diagrams p.36

■ Operation of the F3SJ's Internal Indicator When Using the External Device Monitoring Function

The internal indicator cannot be used to check the input to the external device monitoring input.

Chapter3 What can be done by the setting tool

Using the Setting Tool 54

Preparation 57

F3SJ Status When Setting Tool Is Connected 59

Protection of Setting by Password 61

Setting Adjusted to Application 62

- Fixed Blanking Function 62
- Floating Blanking Function 66
- Warning Zone Function 74
- Muting Function 77
- Override Function 88
- Setting Zone Adjacent Conditions 88

Indicator/Input & Output Setting 91

- Auxiliary Output (Non-Safety Output) 91
- Designated Beam Output Function 93
- External Indicator Output (Non-Safety Output) 95
- Interlock Function 96
- External Device Monitoring Function 98

Operating Range Change 99

- Operating Range Change Function 99

Operation Monitoring 100

- Incident Light Level Display 100
- Disturbance Light Level Display 100
- Status Information Display 101

Maintenance Information 102

- Error History 102
- Power-on Time 102
- Load Switching Frequency 104

Setting Recovery 105

Other 106

Using the Setting Tool

You can change and check setting of F3SJ's various settings if you purchase a setting tool (optional accessory) described below.

- Setting Console F39-MC21
- PC Tool for F3SJ F39-GWUM

⚠ WARNING

F3SJ must be installed, configured, and incorporated into a machine control system by a sufficiently trained and qualified person. Incorrect setting may cause a person to go undetected, resulting in serious injury.

F3SJ Version

The setting tool can be used for F3SJ of version 2 or later, but cannot be used for that of version 1.
Or, if any one of series connected F3SJs is version 1, the setting tool cannot be used (communication error should occur).
Please note that the setting tool does not upgrade the version of the F3SJ.

Confirm the version on F3SJ label, as shown in the diagram below.

Location of the label describing the F3SJ version

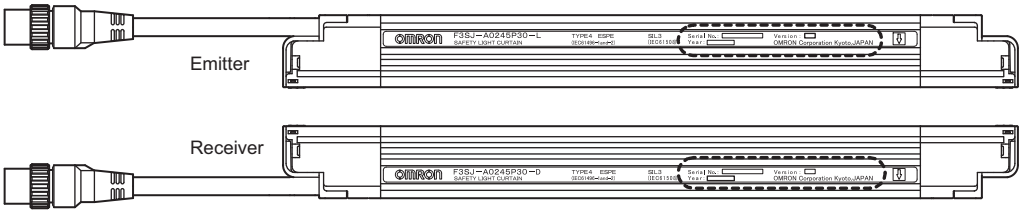

Enlarged view of area enclosed by dotted line

Serial No. : ①	Version : ③
Year : ②	OMRON Corporation Kyoto, JAPAN

① : Serial No.
② : Year of manufacture
③ : F3SJ version (Make sure it is version 2 or later.)

List of Functions that Can Be Changed by the Setting Tool

✓: Available
–: Unavailable

Function/Monitor Item			Setting Console F39-MC21	PC Tool for F3SJ F39-GWUM
Setting Adjusted to Application	Fixed Blanking Function	*1	✓	✓
	Floating Blanking Function	*1	✓	✓
	Warning Zone Function	*1	✓	✓
	Muting Function (For muting system)	*2	✓	✓
	Override Function (For muting system)	*2	✓	✓
Indicator/Input & Output Setting	Auxiliary Output	*2	✓	✓
	Designated Beam Output Function	*1	–	✓
	External Indicator Output	*2	✓	✓
	Interlock Function	*2	✓	✓
	External Device Monitoring Function	*2	✓	✓
Operating Range Change	Operating Range Change Function	*1	✓	✓
Operation Monitoring	Incident Light Level Display	*1	✓	✓
	Disturbance Light Level Display	*1	✓	✓
	Status Information Display	*1	–	✓
Maintenance Information	Error History	*1	✓	✓
	Power-on Time	*1	✓	✓
	Load Switching Frequency	*1	✓	✓
Setting Recovery	Setting Recovery Function	*1	✓	✓
Other	Safety Distance Calculation Function	*1	–	✓
	Connection Cable Length Calculation Function	*1	–	✓
	Rated Response Time Check	*1	✓	✓

*1 New functions added for Version 2. They can be enabled by the setting tool and their settings can be read by the tool.

*2 Available without using the setting tool. Finer functional setting can be done by the setting tool. For these functions, see Chapter 2.

Shown below is an example of description in Chapter 3, taking “External Device Monitoring” for instance.

Ex. “External Device Monitoring Function”

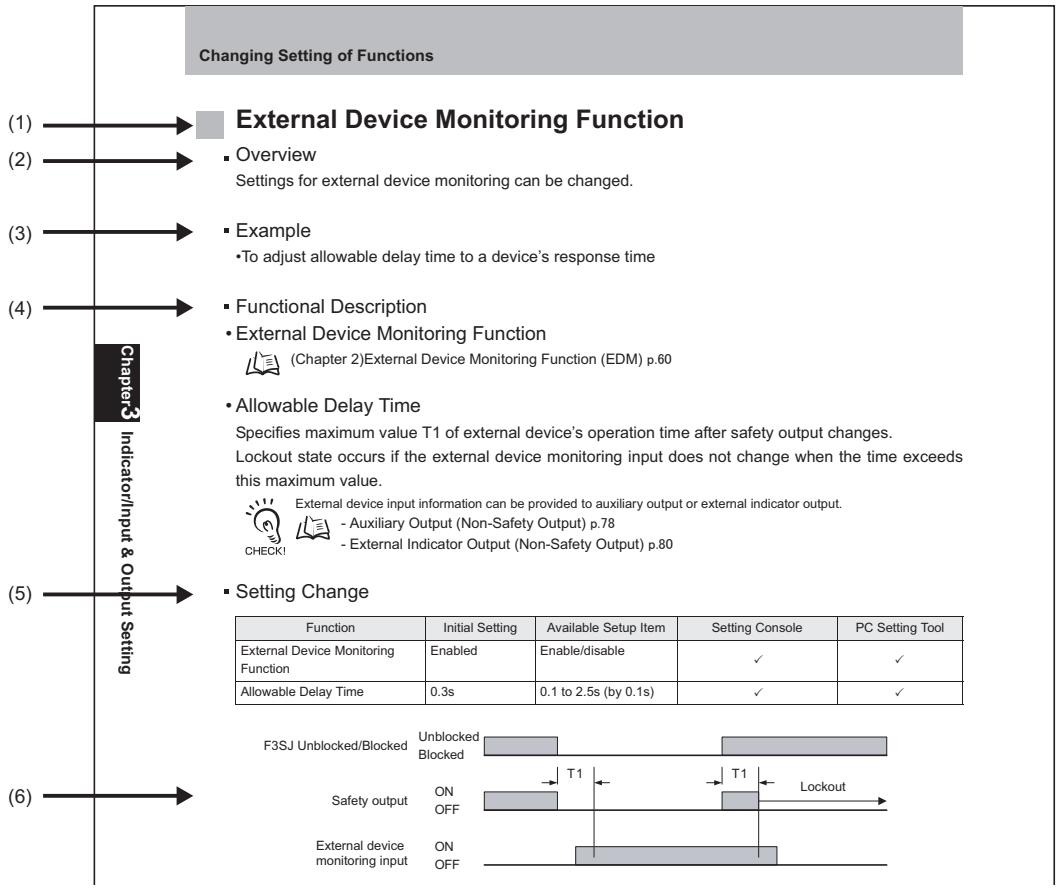

Function	Initial Setting	Available Setup Item	Setting Console	PC Setting Tool
External Device Monitoring Function	Enabled	Enable/disable	✓	✓
Allowable Delay Time	0.3s	0.1 to 2.5s (by 0.1s)	✓	✓

(1) Describes function's name.
(2) Indicates what can be done by the setting tool.
(3) Describes detailed usage of the function.
(4) Describes detailed explanation of the function.
(5) Indicates setup items available for the setting tool.
(6) Illustrates figures and time charts.

Preparation

You can use various functions of F3SJ and change its settings if you purchase optional accessories described below.

■ Setting Console F39-MC21

Provides easy setting on site. For F3SJ-A □□□□P25 and P55 series, use the setting console of version 1.10 or later. Version 1.00 cannot be used.

■ PC Tool for F3SJ F39-GWUM

Allows functional setting through connection with your computer. It provides finer setting than the setting console. For F3SJ-A □□□□P25 and P55 series, use the PC tool for F3SJ of version 1.30 or later.

Using the Setting Tool p.54

Setting Console

Setting console F39-MC21 consists of following units.

•Setting Console
•Branch Connector (with Connector Cap)
•Dedicated Cable
•Plugged Dedicated Cable
•Instruction Manual

■ Connection Procedure

Connect the setting console and F3SJ as shown below. You can connect a branch connector either on the emitter or receiver end. Complete the wiring for F3SJ and turn it on, then change functional settings.

If a branch connector is difficult to attach due to devices layout or other reason, use an accessory plugged dedicated cable to communication lines (+) and (-).

For details, see instruction manual of the setting console F3SJ.

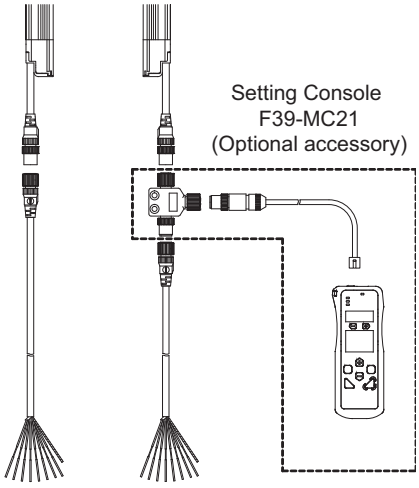

PC Tool for F3SJ

PC Tool for F3SJ, F39-GWUM, consists of following units.

•CD-ROM (Setting software SD Manager and communication unit driver)
•Communication Unit
•Branch Connector (with Connector Cap)
•Dedicated cable
•Plugged Dedicated Cable
•Instruction Manual (Installation Guide)
It allows a user to check F3SJ's operation status and change functional settings in the setting software SD Manager.

■ Connection Procedure

Connect your computer, communication unit, and F3SJ as shown below. You can connect a branch connector either on the emitter or receiver end. Complete the wiring for F3SJ and turn it on, then activate the setting software.
If a branch connector is difficult to attach due to devices layout or other reason, use an accessory plugged dedicated cable to communication lines (+) and (-).
For details, see the help for the SD Manager.

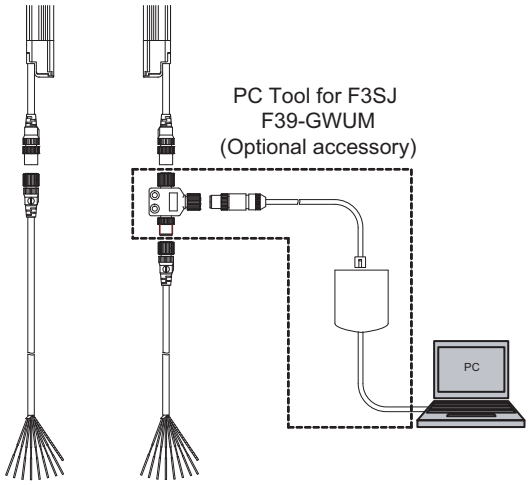

■ Minimum Wiring for Setting

Minimum wiring required to check the operation of the F3SJ
(Wiring for auto reset mode and deactivated external device monitoring function)

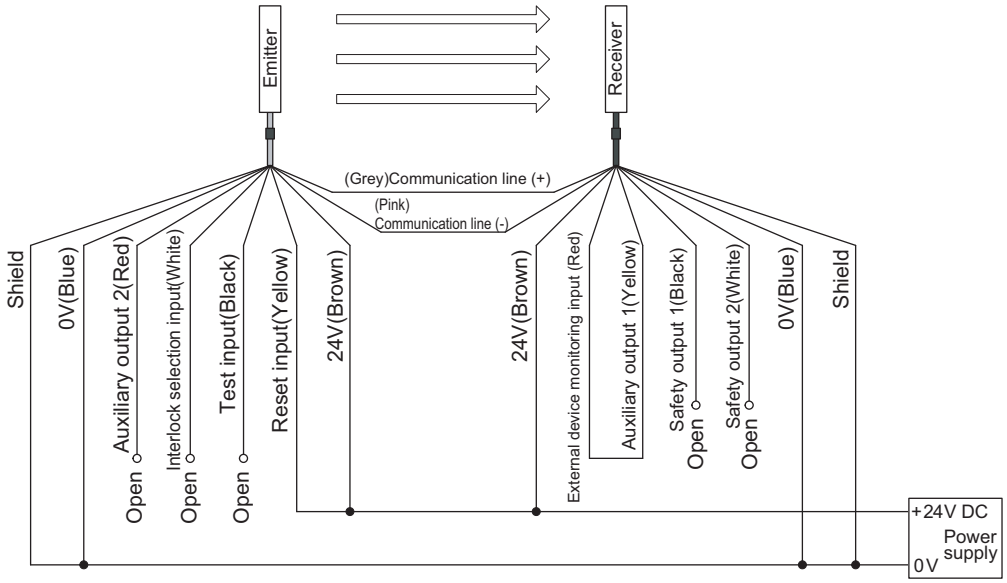

F3SJ Status When Setting Tool Is Connected

Maintenance Status

Connecting setting tool turns F3SJ into maintenance status, allowing change of setting, operation monitoring, and check of maintenance information.
Under the maintenance status, F3SJ operates as shown below:
•Safety output keeps OFF status.
•Indication statuses of internal indicator ON/OFF are partly different.(See below)
•Lockout does not occur except for model error, communications error, setting value error, or internal circuit failure.
(For example, lockout does not occur even if a fixed blanking beam receives light)

Internal Indicators During Maintenance Status

When in the maintenance status, the emitter-side POWER indicator [POWER] and the receiver-side ON or OFF indicator ([ON] or [OFF]) blink.
If the F3SJ is ON during normal operation, the ON output indicator blinks in the maintenance status. The safety output is OFF.
If the F3SJ is OFF during normal operation, the OFF output indicator blinks and the safety output is OFF in the maintenance status.

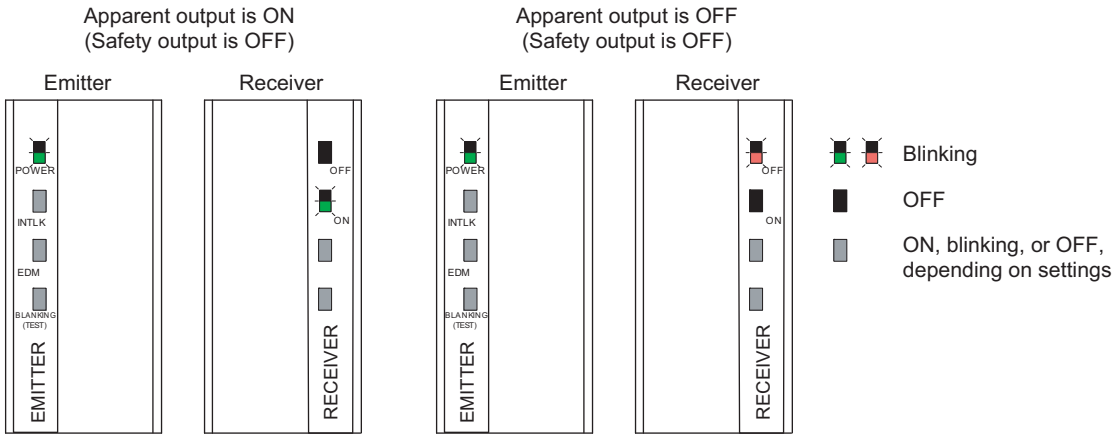

Internal Indicator While Writing/Reading with the Setting Tool

When using the setting tool to write settings to or read them from the F3SJ, the [BLANKING (TEST)] indicator and an indicator on receiver's power connector side (see below) blink.
When accessing at the administrator level, the indication lamps blink twice per second, and when accessing at user level, they blink once per second.

While writing/reading with setting tool (Safety output is OFF)

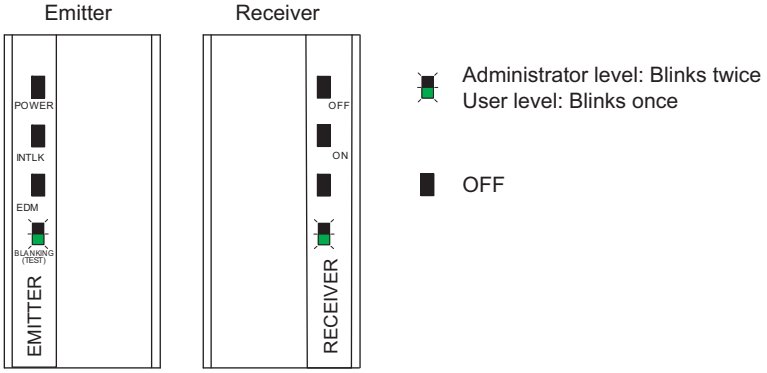

For details about administrator level and user level, see p.61

Protection of Setting by Password

Access Qualification

The setting tool has the following two access levels: a user level, in which setting information can only be read out, and an administrator level, in which functional settings can be changed.
The administrator level requires a password to log in. The initial password for administrator login is "0000".

Password Change

An administrator must change the password to prevent setting change by an operator.
Up to 4 (uppercase for alphabet) and 6 (lower and uppercase for alphabet) digits passwords can be set for the setting console and PC tool for F3SJ respectively.

CHECK!

- If a password of 5 digits or more, or that includes lowercase alphabet, is set for the PC tool for F3SJ, a user cannot log in by the setting console. If you want to use both of the PC tool for F3SJ and the setting console, you must use 4-digit alphanumeric characters (uppercase) for your password.
- A password must be alphanumeric characters.

CHECK!

Be sure to change the initial password.
Manage the password properly and keep it strictly confidential. If the password is leaked, the settings of the F3SJ may be changed unintentionally, which may compromise the safety functions.

If You Forget the Password:

If you forget the password after changing it from the initial setting, contact your sales representative with the serial number on the F3SJ receiver's label.
A master password will be issued to reset to the initial password “0000”.

Location of serial number p.54

Setting Adjusted to Application

Fixed Blanking Function

■ Overview

Disables F3SJ's specified beams.

⚠ WARNING

Install protective structure for all zones of disabled zone so that a worker should not be able to approach hazardous zone of a machine without passing through zones disabled by the fixed blanking function.
Otherwise it may result in serious injury.

If allowable beams are designated for fixed blanking, detection capability gets larger near an object that interrupts beams. Calculate a safety distance based on the setting.
Otherwise, the machine may not stop before a person reaches the hazardous part, resulting in serious injury.

You must ensure that a test rod should be detected in all zones where it should be detected after setting the fixed blanking function. Failure to do so may result in serious injury.

■ Example

•A belt conveyor must be ignored which always sits in a detection zone.

■ Functional Description

• Fixed Blanking Function

A function that disables a part of F3SJ's detection zone. Safety output will be kept ON status even if an object exists in the disabled zone.
For beams with fixed blanking designation, one zone is set for beams in concatenation, and up to 5 zones can be set as fixed blanking zones.

• Fixed Blanking Zone Setting

An zone for fixed blanking zone must be configured. It is possible to perform teaching and set the designated beams manually with the interrupting object placed in the appropriate position. In this example shown below, the 5th and 10th beams are set as bottom and top beams respectively.

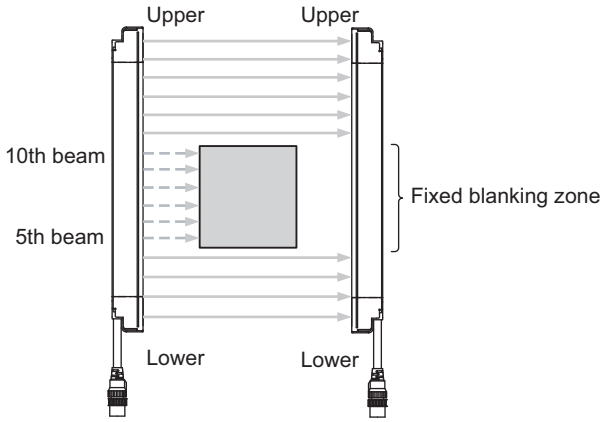

CHECK!

- Upper Beams: Indicate beams on F3SJ's terminal.
  Lower Beams: Indicate beams on F3SJ's power supply end.
- Only one zone can be configured as a fixed blanking zone by the setting console.
- Up to 5 zones can be configured as fixed blanking zones by the PC tool for F3SJ.
- To reconfigure F3SJ, for which multiple zones have been already configured by the PC tool for F3SJ, setting recovery (to factory shipment setting) must be executed before the reconfiguration.
  To configure multiple zones, use the PC tool for F3SJ.

- Fixed Blanking Monitoring Function

For safety reasons, F3SJ transitions to lockout state*1 if part of an zone configured for fixed blanking receives light.
In this case, power cycle or reset input enables fixed blanking function again with the same setting as previous one. Turn off the power and on again or turn on the reset input while all fixed blanking zones are blocked.
If blanking zone cancellation*2 is set, fixed blanking function is canceled if part of an zone configured for fixed blanking receives light. That is, F3SJ's all detection zones are enabled.
In this case, power cycle or reset input enables fixed blanking function again with the same setting as previous one.
Turn off the power and on again or turn on the reset input while all fixed blanking zones are interrupted.

*1 Allowable beams configured on both ends of fixed blanking zone are not monitored.
*2 Can be set only by the PC tool for F3SJ

- Allowable Beam

Allowable beam represents a beam out of the target of fixed blanking monitoring. This should be configured for a fixed blanking beam that irregularly switches between light incidence and interruption due to an interrupting object's oscillation. It can be set for either both or single end of a fixed blanking zone.

See below for an example.
In this case, 5th, 6th, and 10th beams are set as allowable beams. These beams repeatedly switch between light incidence and interruption due to an interrupting object's oscillation, but F3SJ keeps safety output ON while fixed blanking function does not work.

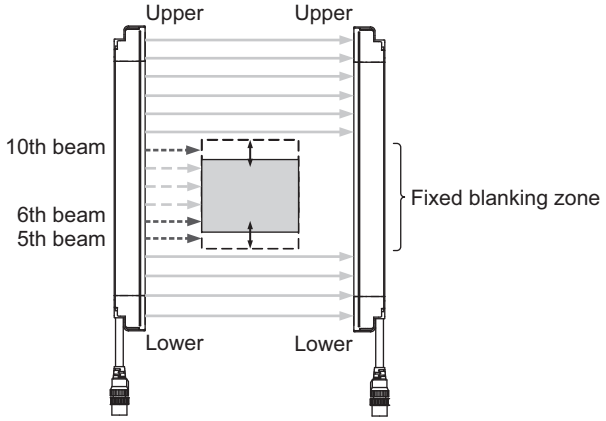

Number of allowable beams available for configuration for each number of fixed blanking beams

Number of Fixed Blanking Beams	Maximum Number of Allowable Beams
1	Setting not possible
2	1
3	2
4	3 *1
5 or more	4 *1

*1Available number of allowable beams for configuration is up to 2 for each zone's both ends for F3SJ-A□□□□P14 and up to 1 for each zone's both ends for F3SJ-A□□□□P20, 25, 30 and 55. (See Setting Change)

For detection capability when allowable beam is configured, see next table.

Detection capability for allowable beam configuration [mm]

Allowable Beam	F3SJ-A □□□□P14	F3SJ-A □□□□P20	F3SJ-A □□□□P25	F3SJ-A □□□□P30	F3SJ-A □□□□P55
Disable	14	20	25	30	55
Lower 1 beam is enabled	23	35	45	55	105
Upper 1 beam is enabled					
Lower 1 beam and upper 1 beam are enabled					
Lower 2 beams are enabled	32	-	-	-	-
Upper 2 beams are enabled					
Lower 2 beams and upper 1 beam are enabled					
Lower 1 beam and upper 2 beams are enabled					
Lower 2 beams and upper 2 beams are enabled					

- Internal Indicators of F3SJ

For basic system: When fixed blanking function is enabled, emitter's BLANKING/TEST indicator is turned on.

For muting system: When fixed blanking function is enabled, receiver's BLANKING/TEST indicator is turned on.

■ Setting Change

Configure for each CH in case of a series connection.

Function	Initial Setting	Available Setup Item	Setting Console	PC Tool For F3SJ
Fixed Blanking Function	Disable	Disable/Enable	✓	✓
Fixed Blanking Zone Bottom Beam	0	1 to Number of Beams	✓	✓
Fixed Blanking Zone Top Beam	0	1 to Number of Beams	✓	✓
Fixed Blanking Monitoring Function	Lockout	Lockout/Blanking Zone Cancellation	– (lockout only)	✓
Allowable Beam	Disable	See table above	– *1	✓

*1 When a fixed blanking zone with 3 beams or more is configured by the setting console, allowable beams are automatically configured.
For a fixed blanking zone with 2 beams or less, allowable beams are not configured. For details, see instruction manual of the setting console.

CHECK!

With the PC tool for F3SJ, perform the same settings for fixed blanking zones 2 to 5.

■ Restriction Condition between Fixed Blanking Zones

More than one fixed blanking zone can be configured adjacently (Figures 1 and 2). But allowable beams cannot be set adjacently. (Figure 3)

You cannot overlap fixed blanking zones. (Figure 4)

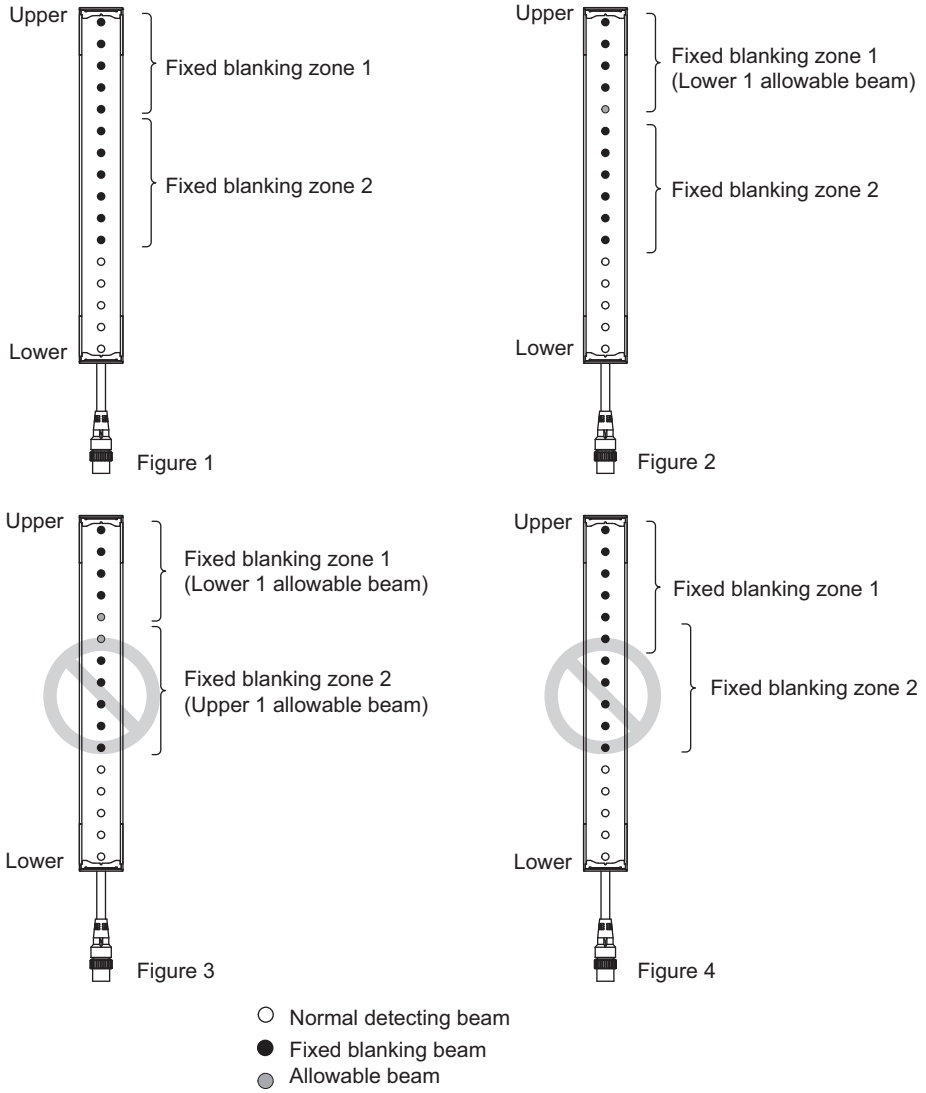

■ Limitation for Combination with Other Functions

You can use this function in combination with muting, floating blanking, and warning zone functions at the same time with the PC tool for F3SJ. The setting console can be combined with muting function.

For both setting tools, there is a limitation for setting with zones.

For details, see Setting Zone Adjacent Conditions p.88 .

Setting Zone Adjacent Conditions p.88

Floating Blanking Function

■ Overview

Turns safety output OFF when F3SJ's detection capability is enlarged or more than one object is detected.

⚠ WARNING

When floating blanking is used, detection capability gets larger. To calculate safety distance, you must use the detection capability under floating blanking.
Otherwise a machine may not be stopped before a human body reaches to the hazardous zone, resulting in serious injury.

You must ensure that the system works as you intended after configuring floating blanking. Failure to do so may result in serious injury.

■ Example

Detection function can be disabled for a moving object with a given width which you do not want to be detected in the detection zone.

■ Functional Description

- Floating Blanking Function

  Enlarges detection capability to allow an object with a certain size to enter or more than one interruption at the same time.

- Floating Blanking Zone Setting

  In the setting console, all beams are set as a floating blanking zone. With the PC tool for F3SJ it is possible to set 1 zone, and a zone range can be specified. In the diagram shown below, the 5th beam is set as the bottom beam and the 10th beam is set as the top beam for a floating blanking zone. Also, with the interrupting object placed in the appropriate position, it is possible to perform teaching and set the designated beams manually.

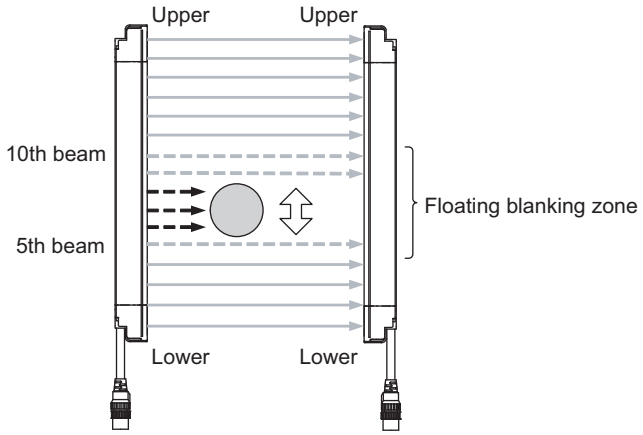

CHECK!

Muting zone and floating zone cannot overlap, thus the zones must be adjusted by the PC tool for F3SJ.
Note that the setting console cannot enable both functions at the same time.

- Muting Function p.77
- Setting Zone Adjacent Conditions p.88

• Floating Beam

Based on floating beam count setting, settings shown below do not turn OFF safety output as shown below. Measure the size (maximum diameter) of the interrupting object, and set a number of floating beams so that the size of the interrupting object is less than the dimensions in the graph.

Setting Example: For F3SJ-A□□□□P14 with an interrupting object of diameter 20mm, set number of floating beams as 3. With this setting, F3SJ will not turn OFF safety output even if an object with a diameter of 22mm or less is in the floating blanking zone.

Valid Range for number of Floating Beams

F3SJ-A□□□□P14 series

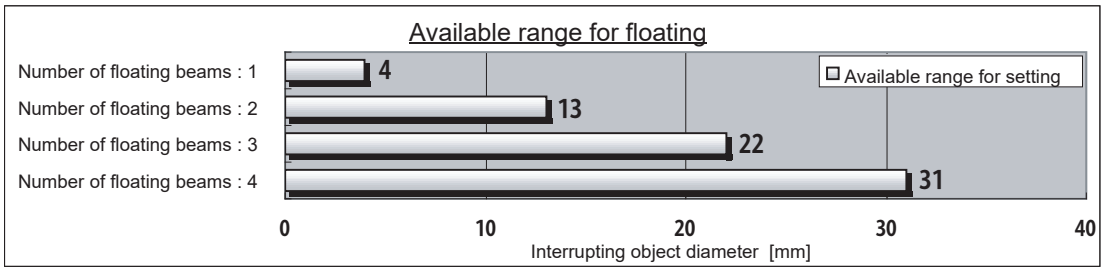

F3SJ-A□□□□P20 series

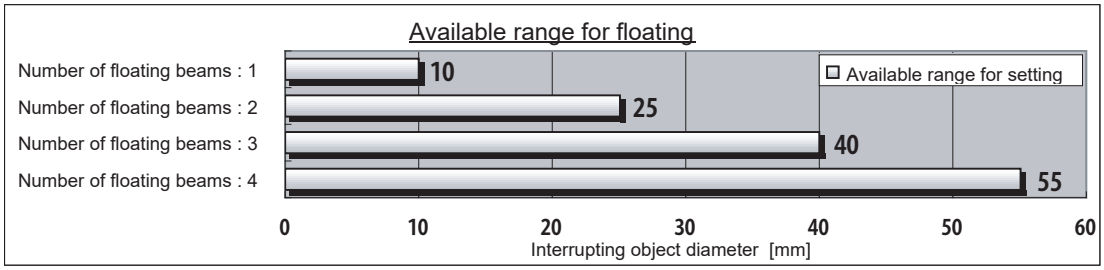

F3SJ-A□□□□P25 series

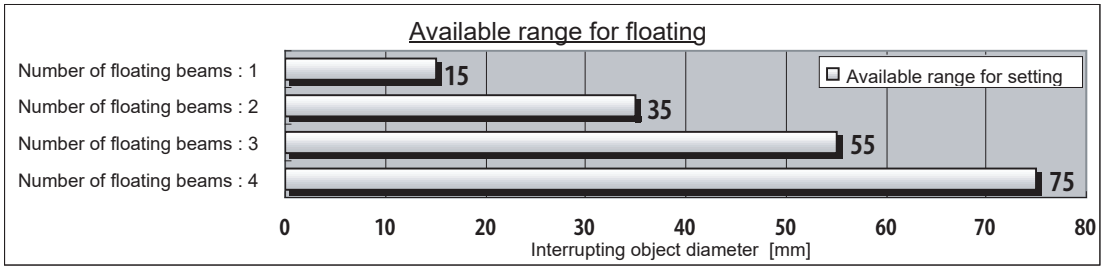

F3SJ-A□□□□P30 series

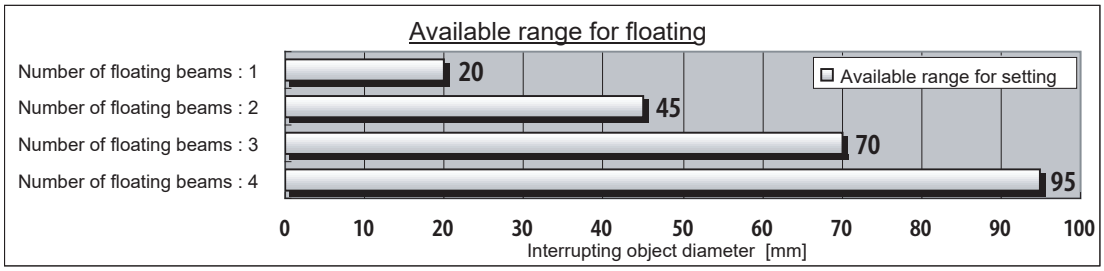

F3SJ-A□□□□P55 series

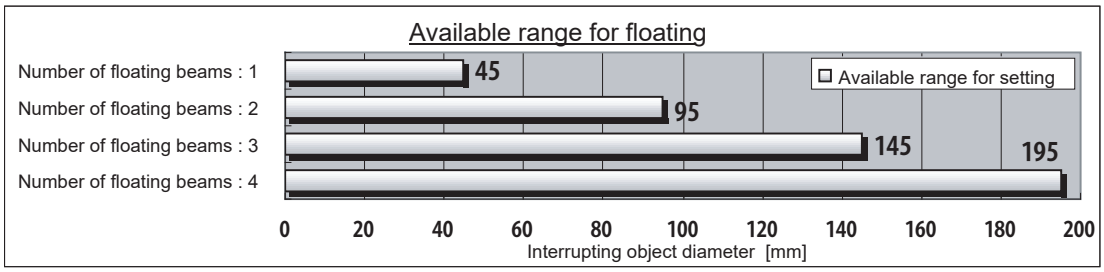

- Number of allowable beams

Number of beams in the floating blanking zone, that are not monitored by the floating blanking monitoring function. When the floating blanking monitoring function is enabled and the number of blocked beams becomes less than "the number of floating beams - the number of allowable beam(s)", the F3SJ enters the lockout state.

- Floating Blanking Monitoring Function (Sequential Beam Mode Only)

F3SJ monitors an interrupting object in a floating blanking zone. (If the object is removed or gets smaller, human entry may not be detected by F3SJ, resulting in serious injury)
F3SJ enters lockout when an interrupting object is removed.
By setting the number of floating beams, the monitoring function is enabled and lockout occurs when an interrupting object is smaller than the value that is set.
For F3SJ's operation when an interrupting object is removed, setting is available from disabling monitoring function[*1].
In this case, power cycle or reset input enables floating blanking function again with the same setting as previous one. Turn off the power and on again or turn on the reset input while all the specified beams are blocked.
From the graph below, check number of the floating beams as well as that of allowable beams that allow operation without putting the F3SJ into lockout or turning the safety output OFF.

[*1] Even if the interrupting object is removed, F3SJ will not turn OFF the output or enter lockout. This function is for PC tool for F3SJ only.

For F3SJ-A□□□□P14 with an interrupting object of diameter 20mm, following combinations are available.
•Number of floating beams is 3, monitoring disabled
•Number of floating beams is 3, monitoring enabled (number of allowable beams is 2)
•Number of floating beams is 4, monitoring enabled (number of allowable beams is 3)

If number of floating beams is 3 and monitoring enabled (number of allowable beams is 2) is set, the sensor turns safety output OFF when 22mm or longer zone is interrupted, and locks out when under 14mm is interrupted. (If blanking monitoring function is set to lockout)

Valid Range for number of Floating Beams(if blanking monitoring is enabled)

F3SJ-A□□□□P14 series

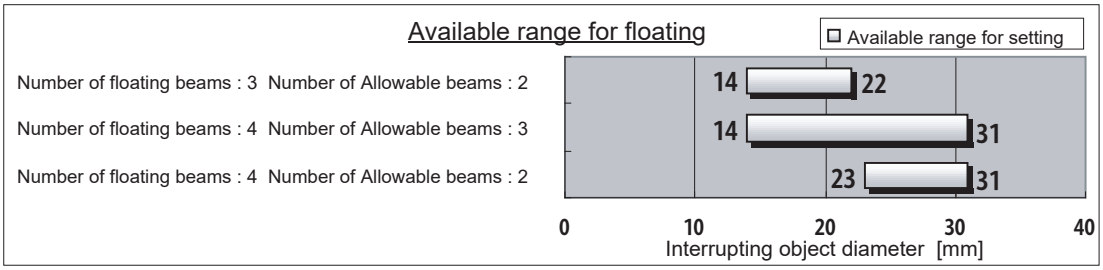

F3SJ-A□□□□P20 series

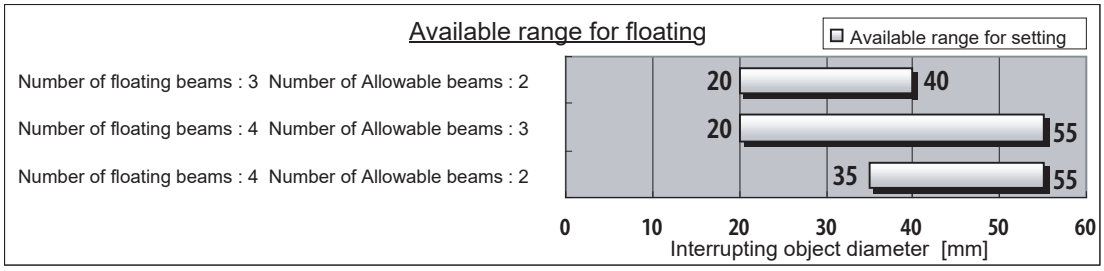

F3SJ-A□□□□P25 series

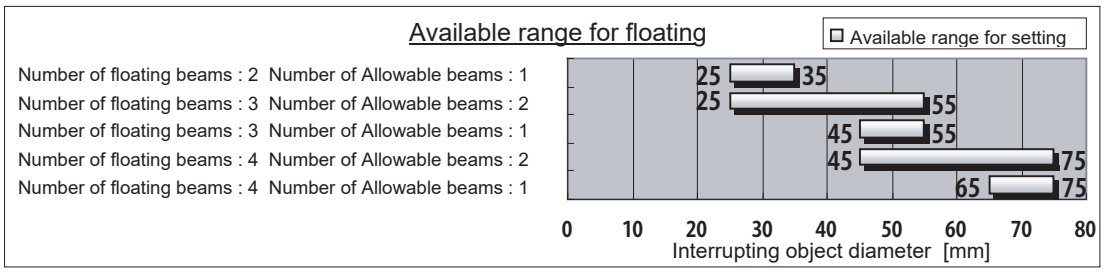

F3SJ-A□□□□P30 series

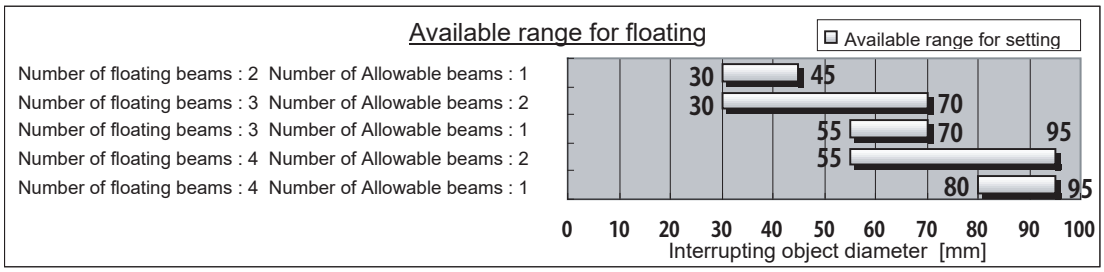

F3SJ-A□□□□P55 series

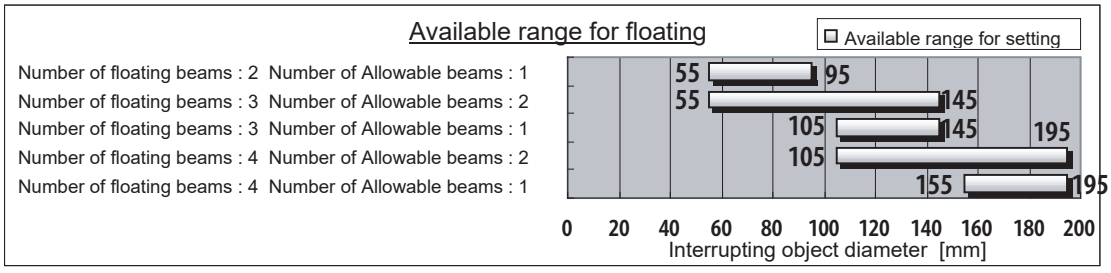

Number of Floating Beams	Number of Allowable Beams
1	Setting not possible
2	Only 1
3	1, 2
4	1, 2, 3

• Floating Blanking Mode

Floating blanking has the following 2 modes.

1. Sequential Beam Mode
2. Non-Sequential Beam Mode

1. Sequential Beam Mode

If a size of an interrupting object is specified size or smaller, safety output is not turned OFF.

But if interrupting object(s) enter more than one zone of detection zone, safety output is turned OFF.

Under this mode, floating blanking monitoring can be configured. (It cannot be if number of floating beams is 1)

For minimum detection capability, see “Detection Capability”.

For a size of an object which should not be detected, see “Floating Beam”.

- Floating Blanking Function p.66
- Detection Capability p.73
- Floating Beam p.67

Setting Example: F3SJ-A□□□□P20 series

If number of floating beams is 3, minimum detection capability is 65mm.(Figure 1)

If number of floating beams is 3, and if diameter of an interrupting object is 40mm or smaller, safety output is not turned OFF. (Figure 2)

If monitoring function is enabled and number of allowable beams is 2, the F3SJ locks out if an interrupting object is removed or its diameter gets smaller than 20mm. (Figure 3)

Safety output can be turned OFF when more than one zone is interrupted by object(s) that should not turn the safety output OFF. (Figure 4)

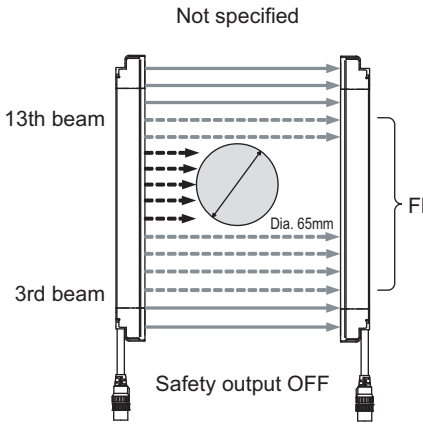

Figure 1

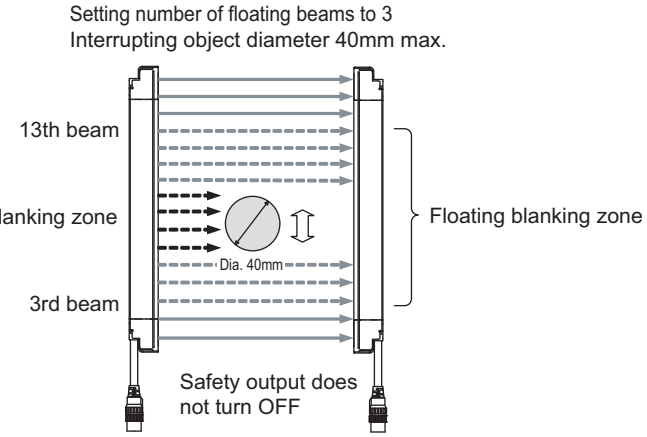

Figure 2

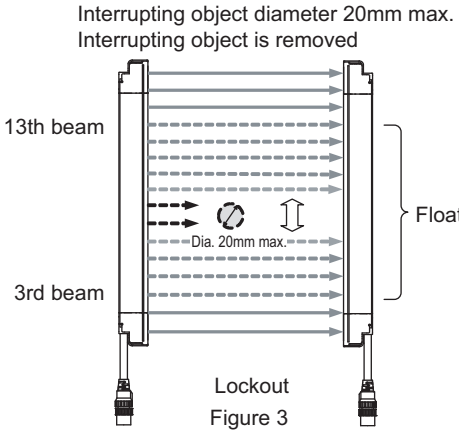

Figure 3

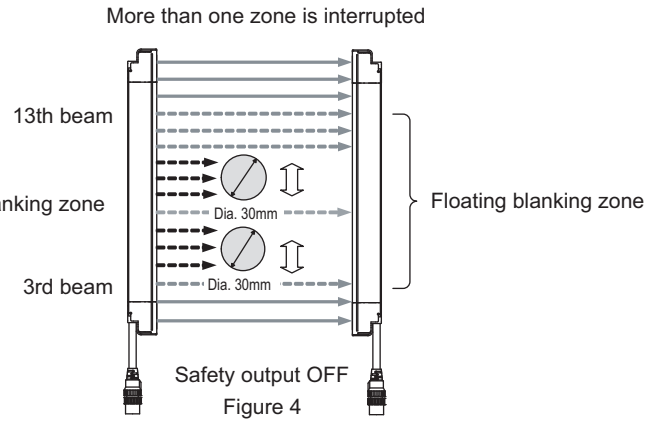

Figure 4

2. Non-Sequential Beam Mode

When total number of interrupted beams in an zone reaches the designated number or more, it is evaluated as interruption.

Detection Capability p.73

• Setting Example

If number of floating beams is 2, safety output is not turned OFF if 3 or more beams are interrupted.
If 2 or less beams are interrupted, safety output is not turned OFF. (Figure 5)
If 3 or more beams are interrupted, safety output is turned OFF. (Figure 6)
Even if there is only one interrupting object, safety output can be turned OFF when 3 beams are interrupted. (Figure 7)

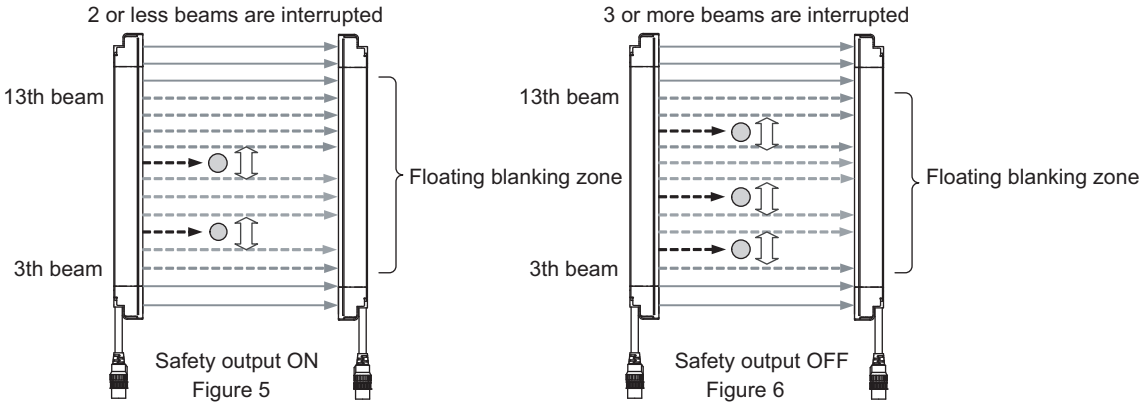

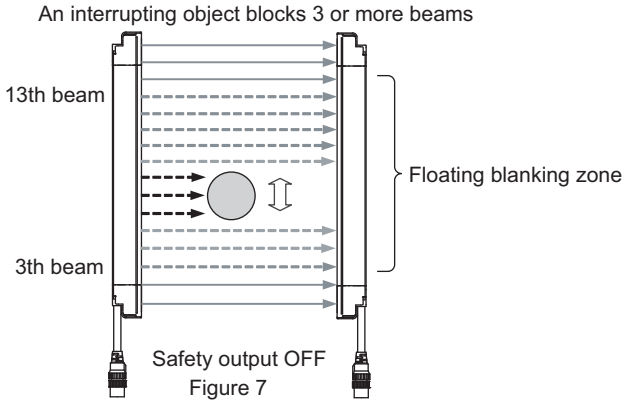

• Internal Indicators of F3SJ

For basic system: Emitter's BLANKING/TEST indicator is turned on under floating blanking state.
For muting system: Receiver's BLANKING/TEST indicator is turned on under floating blanking state.

■ Setting Change

In the setting console, all beams are set as a floating blanking zone.
With the PC tool for F3SJ, it is possible to set a range of floating blanking zone.
Configure for each CH in case of a series connection.

Function	Initial Setting	Available Setup Item	Setting Console	PC Tool For F3SJ
Floating Blanking Function	Disable	Enable/disable	✓ *3	✓
Blanking Zone Bottom Beam	0	1 to Number of Beams	– (Fixed to bottom)	✓
Blanking Zone Top Beam	0	1 to Number of Beams	– (Fixed to top)	✓
Both End Beam Disabling Mode *1	Disable	Enable/disable	✓	✓ *4
Floating Blanking Mode	Sequential Beam Mode	Sequential Beam Mode/ Non-Sequential Beam Mode	✓	✓
Number of Floating Beams	1	1~4	✓	✓
Number of Allowable Beams	0	0~3	✓	✓
Floating Blanking Monitoring Function *2	Lockout	Lockout / Monitoring Disabled	–	✓

*1 If this function is enabled, and if either beam of F3SJ's ends is configured as a floating blanking zone, it is excluded from floating blanking zone.
In figure 11, for example, bottom and top beams setting of blanking zone is ignored and a zone from the 2nd to 15th beams is set as a floating blanking zone.
*2 Monitoring is disabled for non-sequential beam mode.
*3 To connect the setting console and F3SJ for which followings are configured, you must execute the setting recovery on connection to recover factory shipment setting.
- Blanking zone is partially set
- Floating blanking monitoring function is being disabled
*4 In case of PC tool for F3SJ, other zone must be specified than outermost beams.

• Detection Capability

Detection capability of F3SJ can differ based on number of floating beams as shown below.
Minimum detection capability and number of beams for which safety output should be turned OFF

Model	Number of Floating Beams and Detection Capability				
	Not specified	Setting 1	Setting 2	Setting 3	Setting 4
F3SJ-A□□□□P14 series	14 mm	23 mm	32 mm	41 mm	50 mm
F3SJ-A□□□□P20 series	20 mm	35 mm	50 mm	65 mm	80 mm
F3SJ-A□□□□P25 series	25 mm	45 mm	65 mm	85 mm	105 mm
F3SJ-A□□□□P30 series	30 mm	55 mm	80 mm	105 mm	130 mm
F3SJ-A□□□□P55 series	55 mm	105mm	155 mm	205 mm	255mm
Number of beams for which safety output is turned OFF	1 beam	2 beams	3 beams	4 beams	5 beams

■ Limitation for Combination with Other Functions

You can use muting, fixed blanking, and warning zone functions in combination only with the PC tool for F3SJ. Note that there is a limitation for setting with zones.
The setting console cannot combine these functions.
For details, see Setting Zone Adjacent Conditions p.88 .

Setting Zone Adjacent Conditions p.88

Warning Zone Function

Overview

Detection zone can be divided into original detection zone and warning zone.

⚠ WARNING

Warning zone output is non-safety output. You must not include it to calculation of safety distance. Otherwise safety distance may be reduced, resulting in serious injury.

A warning zone CANNOT be used for safety applications. Always install your system so that a detection zone should be passed before reaching a source of danger.

Warning zone function can be used only when F3SJ is installed horizontally. It CANNOT be used when F3SJ is installed vertically.

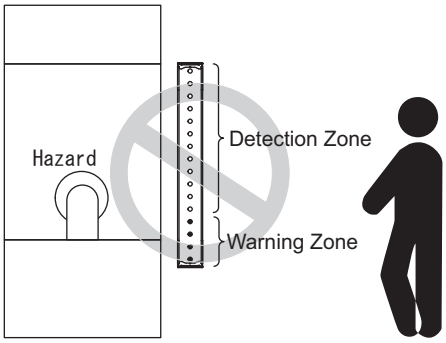

A warning zone must be configured based on a safety distance.

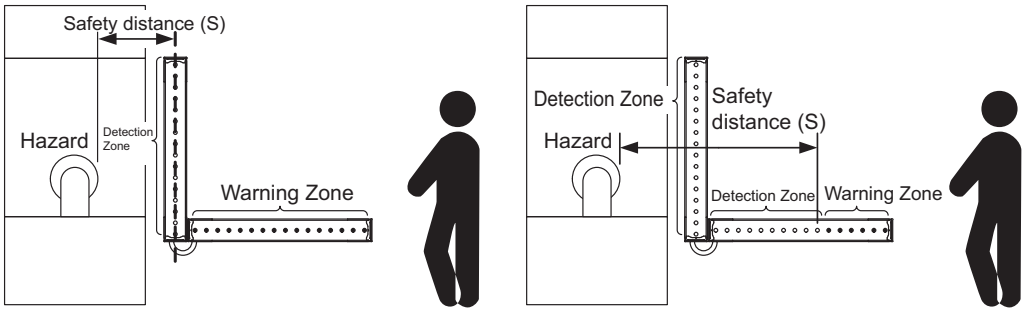

See "Safety Distance: If a person approaches the detection zone of the F3SJ perpendicularly p.111 " if a detection zone is within vertically installed F3SJ as shown left.
See "Safety Distance: In case of horizontal approach of a human body to F3SJ's detection zone p.114 " if a detection zone is within horizontally installed F3SJ as shown right.

Example

•When a person enters, indicator or buzzer should notify warning without stopping a machine.

■ Functional Description

• Warning Zone Function

Incidence or interruption to a warning zone will not affect safety output operation. When an output operation mode of auxiliary output or external indicator output is configured as a warning zone, its unblocked/blocked status can be output.

- Auxiliary Output (Non-Safety Output) p.91
- External Indicator Output (Non-Safety Output) p.95

• Warning Zone Setting

You can teach a warning zone by interrupting beams to be set as the zone, or manually specify number of beams from top or bottom beam. (figure 1 & 2)

For manual specification, configure beam number in case of the PC tool for F3SJ, or number of beams in case of the setting console.

Configuration cannot be executed for cases shown below.

•All beams are configured as a warning zone (figure 4).

•A warning zone is specified without including any of end beams (figure 5)

Note that a warning zone can be configured for all beams if series connected F3SJs have one or more normal beam. (Figure 3)

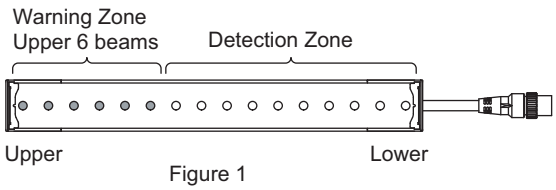

Figure 1

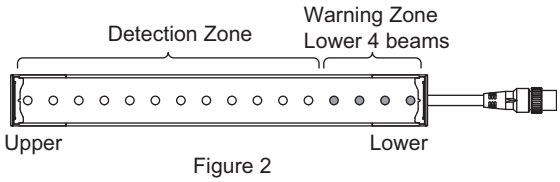

Figure 2

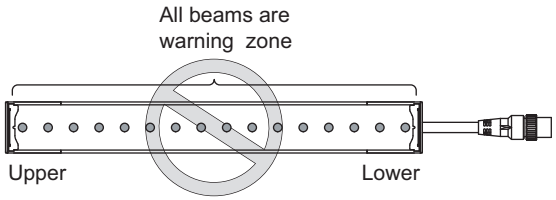

Figure 4

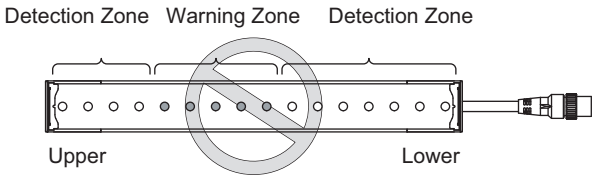

Figure 5

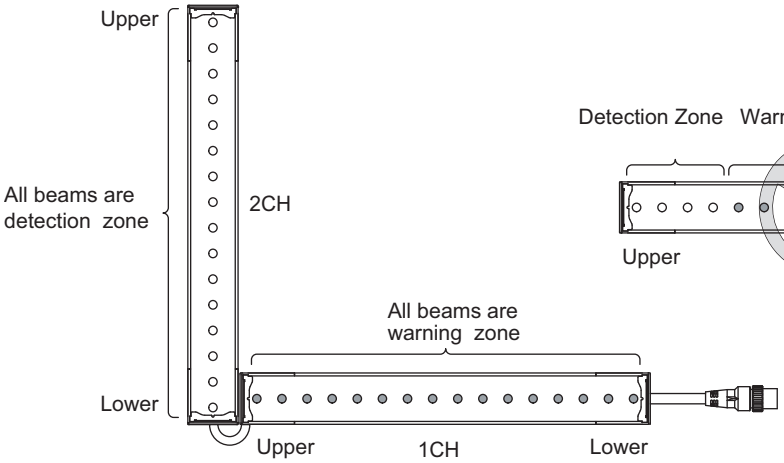

Figure 3

Setting Example: Configuring a warning zone information for auxiliary output 1
Reverse Output: None

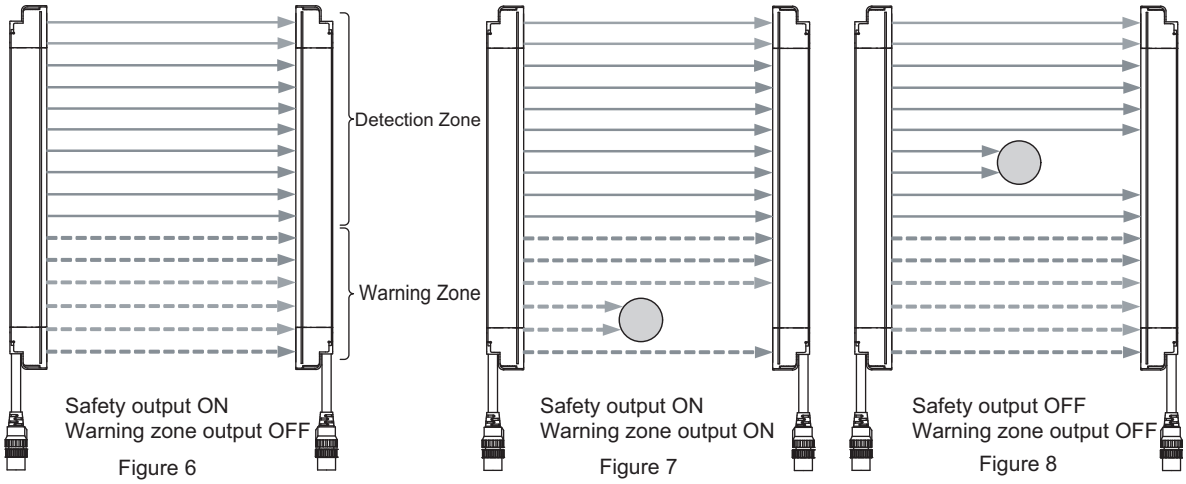

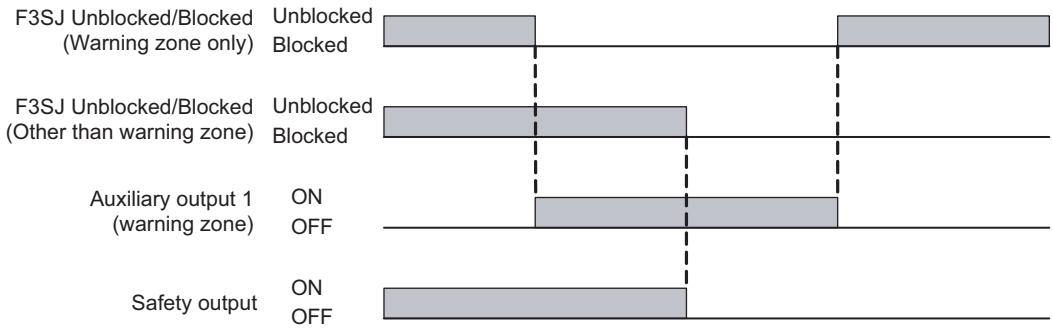

■ Setting Change

Configure for each CH in case of a series connection.

Function	Initial Setting	Available Setup Item	Setting Console	PC Tool for F3SJ
Warning Zone Function	Disable	Disabled/Enabled from upper/ Enabled from lower	✓	✓
Warning Zone Setting	0	0 to Number of Beams	✓	✓

CHECK!

- If you need output of warning zone's incidence/interruption status, set output mode of auxiliary output or external indicator output to warning zone information.
  - Auxiliary Output (Non-Safety Output) p.91
  - External Indicator Output (Non-Safety Output) p.95
- A warning zone cannot overlap with muting, fixed blanking, nor floating blanking zones.

■ Warning Zone Label

When a warning zone is configured, you must attach labels that indicate a border between normal detection zone and warning zone.

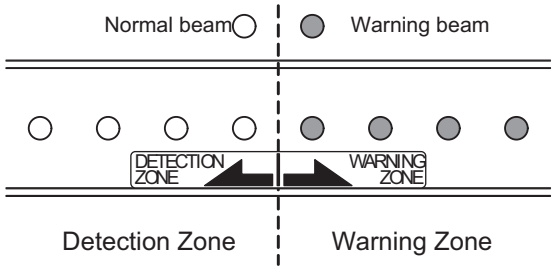

■ Limitation for Combination with Other Functions

You can use muting, fixed blanking, and floating blanking functions in combination only with the PC tool for F3SJ. Note that there is a limitation for setting with zones.
The setting console cannot combine these functions.
For details, see Setting Zone Adjacent Conditions p.88 .

Setting Zone Adjacent Conditions p.88

Muting Function

■ Overview

Configures muting function.

⚠ WARNING

The muting function disables safety functions of the device. You must ensure safety using other measures during this function is enabled.

Install muting sensors so that they can distinguish between a person and an object that is being allowed to pass through the detection zone. If the muting function is activated by the detection of a person, it may result in serious injury.

All muting lamps (external indicators) that indicate state of muting function must be installed where workers can see them from all the operating positions.

Muting related time must be properly configured for its application by a sufficiently trained and qualified person, and the person must have responsibility for settings, especially when setting the muting time limit to infinite.

Use independent 2 input devices for muting input.

You must install F3SJ, muting sensor, and physical barrier, and configure time settings for muting so that an operator should not enter hazardous zone.

■ Example

•Only workpieces should pass through a conveyor entry
•Muting function should work for only a specified zone
•Other muting mode should be configured than standard muting which is not suitable for your application

■ Functional Description

• Muting Function

Muting System p.31

• Operation Mode

PC tool for F3SJ allows selection of 3 operation modes for muting function:

1. Standard Muting Mode
2. Exit Only Muting Mode

3. Position Detection Muting Mode

• Muting Zone Setting

Setting tool provides designation of beams for muting. (All beams are specified for factory shipment)
You can specify a beam by teaching, with which the sensor learns muting beams as those interrupted, or manually.

Muting Zone Setting Example

•Setting from F3SJ's upper beams (figure 1)

•Setting multiple zones (figure 2)

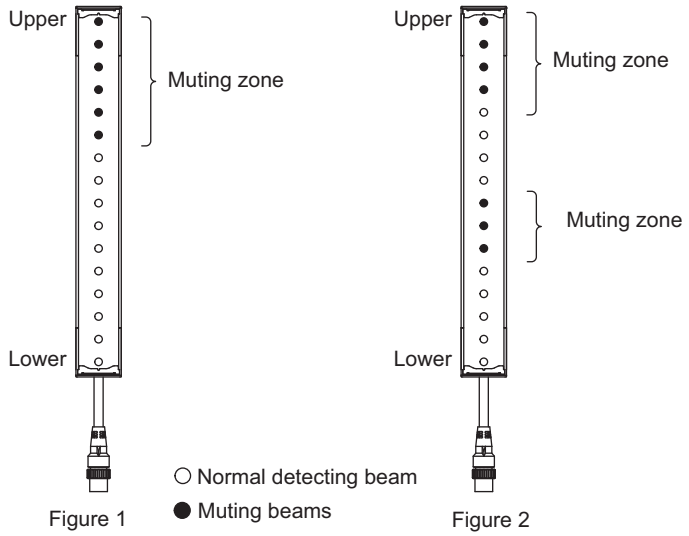

CHECK!

- Only one zone can be configured as a muting zone by the setting console, which cannot set more than one zone.
- Interlock function is disabled for a muting system.
  If you want to use start or restart interlock, use the setting tool to enable the function.
  Interlock Function p.96
- When muting function is enabled, a muting lamp is turned on to notify people in the surrounding zone that the safety functions are disabled. Factory setup is external indicator outputs 1 and 2.
  While the setting tool allows change of output destination for a muting lamp, muting/override information must be set to at least one of auxiliary output 1 or external indicator outputs 1 or 2.
  If none of the above output is set, F3SJ enters lockout.
- Auxiliary output 1, external indicator outputs 1 and 2 have diagnosis function.
  For safety reason, using diagnosis function is recommended.
  - Auxiliary Output (Non-Safety Output) p.91
  - External Indicator Output (Non-Safety Output) p.95

1. Standard Muting Mode

Operation mode configured for F3SJ factory shipment.
Turning muting inputs 1 and 2 ON with time difference enables muting function.
For details, see Muting in Chapter 2.

Muting System p.31

CHECK!

Setting can be changed, such as muting time limit.

2. Exit Only Muting Mode (Setting is Available Only for PC Tool For F3SJ)

Turning muting inputs 1 and 2 ON with time difference enables muting function.
Difference from standard mode exists in muting completion condition.

• Start Conditions

If both of the following 2 conditions are present, muting is activated.

1. No interrupting object is found in the F3SJ's detection zone, and safety output is ON.
2. After muting input 1 is turned ON (connected to 9 to 24V), muting input 2 is turned ON (connected to 9 to 24V) within the muting input time limit of T1min to T1max (0.03 to 3s: can be changed).

When condition 1 is satisfied but time condition of 2 is not, a muting sequence error occurs and receiver's muting error indicator turns ON.

A muting error is canceled when either of the following condition is satisfied.

•Muting is started by a proper muting sequence.

•Power cycle under muting input 1 and 2 OFF state.

• End Conditions

If either of the following condition is satisfied, muting state will be released.

•When a workpiece passed a muting sensor 1 or 2 and muting delay time dedicated to exit (4s: can be changed) passed.

•When a workpiece passed F3SJ's detection zone and muting waiting time(0.1s) passed.

•Muting continuance time exceeds muting time limit (60s: can be changed).

•When a muting beam is not blocked within muting input time limit T1max (maximum) after the muting input 2 is turned ON.

CHECK! Muting state can be also released when the sensor enters lockout.

• For Override Function

The override function is unavailable for the exit only muting mode.

• For Wiring

Same as standard muting.

Chapter 2 Muting System p.31

• Installation Example of Exit Only Muting Mode

This is an installation example of exit only muting mode. When exit only muting mode is set, install the muting sensor on the hazardous side of the workpiece exit.

This can be used if a workpiece has a certain length and the hazardous side of the workpiece exit has enough space around it.

1. Before a workpiece passes through

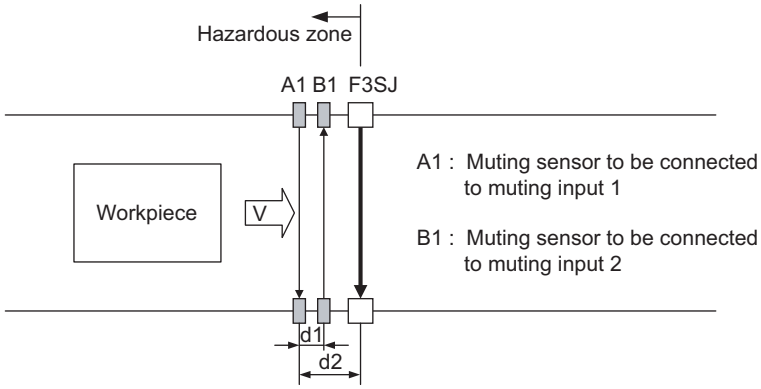

All muting sensors are turned OFF and the safety function of the F3SJ is working.

2. The muting sensor is blocked and the safety function of the F3SJ is disabled

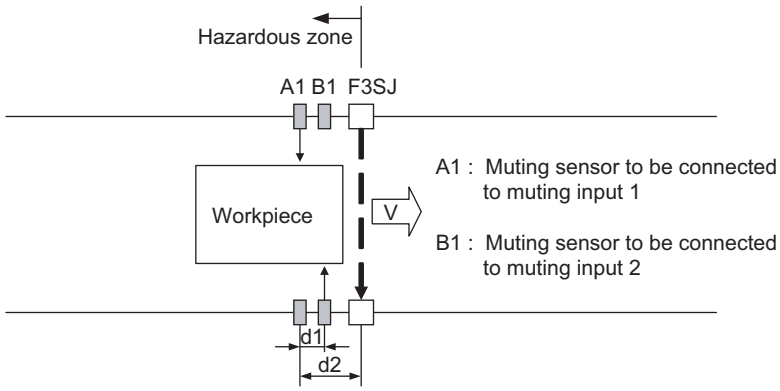

When muting sensors A1 and B1 are turned ON in this order, and the muting function is enabled. In this state, the safety function of F3SJ is disabled.

3. Muting sensor A1 is turned OFF

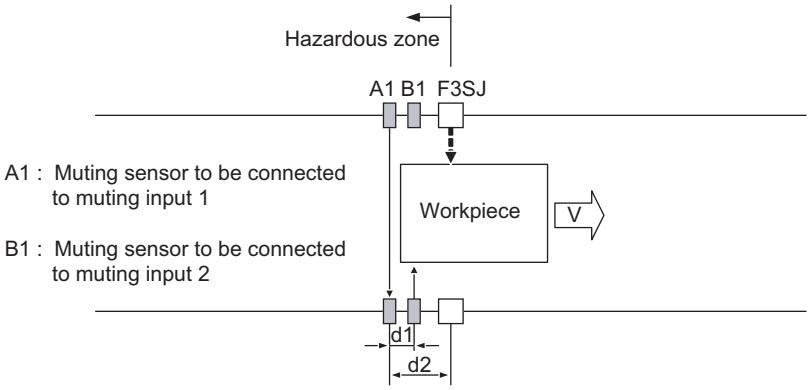

A workpiece finished passing the muting sensor A1 and the sensor starts turning OFF. For standard muting system, muting is released here. For exit only muting, F3SJ's safety function is disabled for a exit only muting delay time: T5.

4. Muting sensor B1 is turned OFF

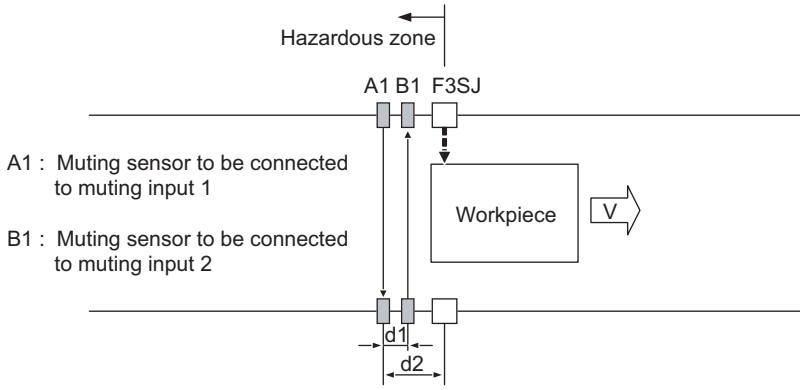

A workpiece finished passing the muting sensor B1 and the sensor is turned OFF. F3SJ disables its safety function if it is within a exit only muting delay time.

5. A workpiece passed F3SJ's detection zone

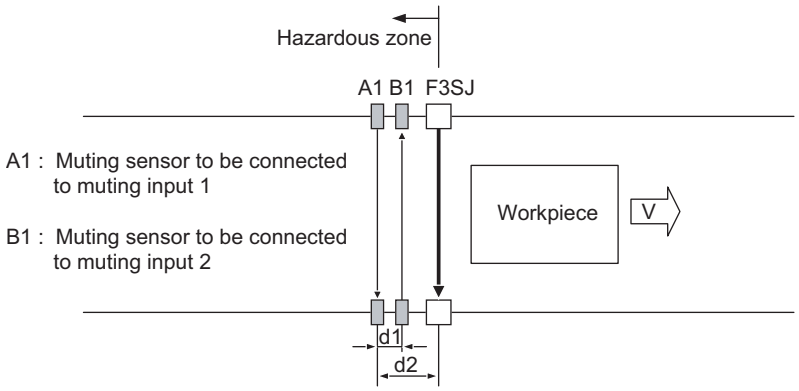

A workpiece passed F3SJ's detection zone. When muting end waiting time: T4 (0.1s) passed after F3SJ received light, muting state is released.

- Installation Distance

Distances between muting sensors A1, B1, and F3SJ must be configured based on speed of a workpiece.

Distance d1 between muting sensors A1 and B1 must satisfy Formulas (1) and (2).

Distance d2 between muting sensor A1 and F3SJ must satisfy Formulas (3) and (4).

Time t1 [s] to turn muting sensors A1 and B1 in this order is:

t1 = d1 / V . . . . . Formula (1) d1 [m] : Distance between muting sensors A1 and B1
V [m/s] : Approach speed of a workpiece

Time t1 in Formula (1) for F3SJ to enter muting state is within a range shown below:

T1min < t1 < T1max. . . . Formula (2) T1min [s] : Muting input time limit value (minimum)
T1max [s] : Muting input time limit value (maximum)

CHECK! The PC tool for F3SJ can change T1min and T1max.

Time t2 [s] for a workpiece to pass F3SJ's detection zone after passing the muting sensor A1 is:

t2 = d2 / V . . . . . Formula (3) d2 [m] : Distance between muting sensor A1 and F3SJ
V [m/s] : Approach speed of a workpiece

Time t2 in Formula (3) must satisfy following condition:

t2 < T5 . . . . . Formula (4) T5: Exit only muting delay time

The PC tool for F3SJ can change T5.

CHECK!

Sensors must be installed so that person's passing should not cause muting state.
Also, muting sensors and F3SJ must be installed so that muting state caused by a workpiece should be ended before the next workpiece arrives at the first muting sensor.

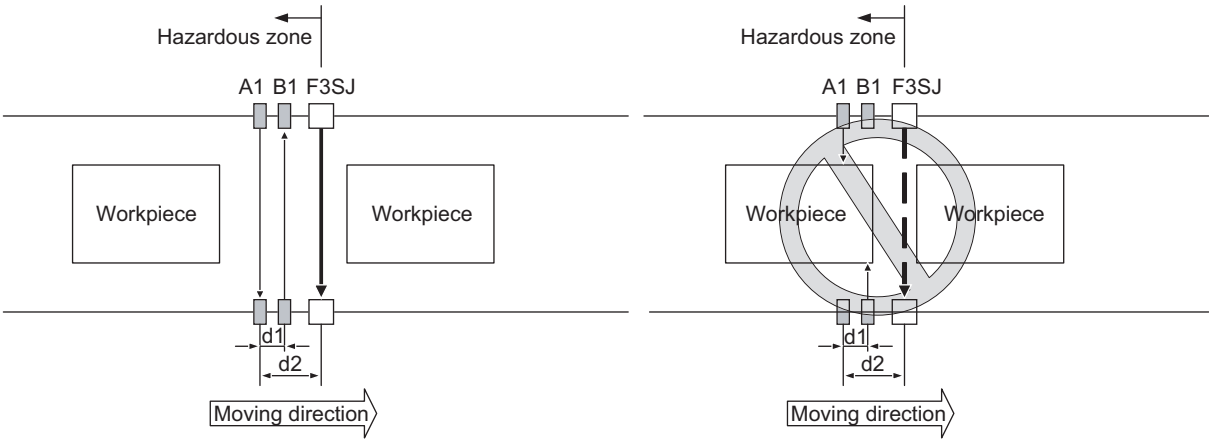

Timing Chart

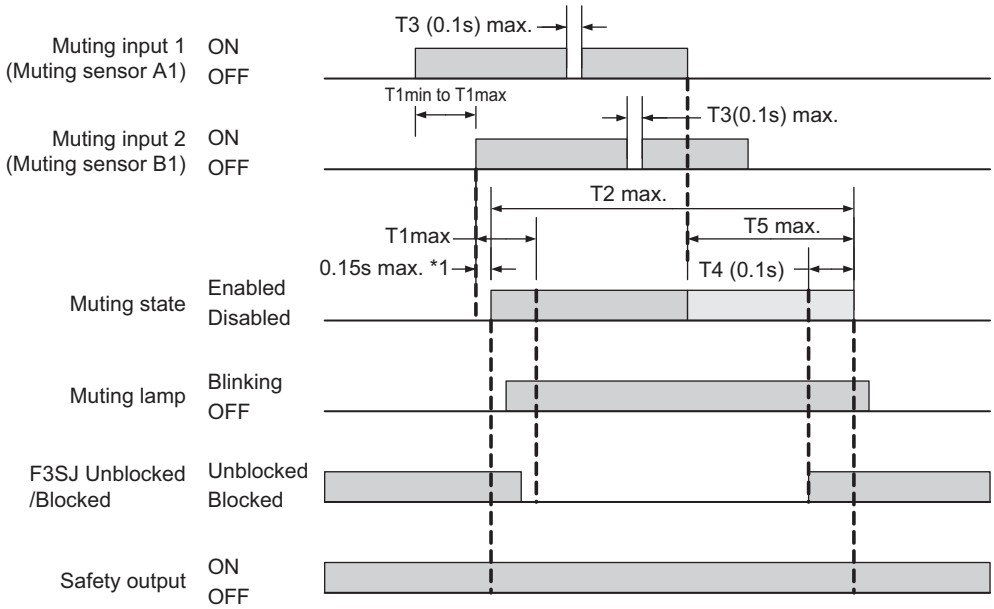

*1 The value is applied to a single sensor. Values for connected sensors are:

# of connections	*1 Value (s)
Single	0.15
2 connected	0.26
3 connected	0.29
4 connected	0.32

•T1min: Muting input time limit value (minimum)
Minimum time difference between muting inputs 1 and 2.
If the time difference between muting inputs 1 and 2 is smaller than this value, a muting error occurs.

•T1max: Muting input time limit value (maximum)

Maximum time difference between muting inputs 1 and 2.
Minimum value must be less than maximum value.

•T2: Muting time limit
Time to be continued for muting function. If muting state exceeds this time, the function is canceled.

•T3: Maximum muting input time with allowable waveform cracks
Indicates maximum time limit to allow waveform cracks regarding the muting input 1 and muting input 2 in the effective muting state. It is set as 0.1s.

•T4: Muting end waiting time
OFF delay time from F3SJ's light incidence to release of muting state. It is set as 0.1s.

•T5: Exit only muting delay time
OFF delay time from muting input 1 or 2's signal turning OFF to release of muting state.

CHECK!

If either of the following conditions are present, muting ended. In this timing chart, T4(0.1s) condition releases the muting state.

1. When exit only muting delay time T5 exceeds the setting value.
2. When a workpiece passed F3SJ's detection zone and muting waiting time T4(0.1s) passed.
3. When muting continuance time exceeds muting time limit T2.

3. Position Detection Muting Mode (Setting is Available only for PC Tool For F3SJ)

Muting function is enabled when muting input 1 turns ON from OFF and muting input 2 turns OFF from ON within the input time difference T1max, measured by a limit switch, etc. Muting inputs must be heterogeneous redundant inputs such as N.O. contact and N.C. contact types. (In case of PNP output type photoelectric sensor, use one by L/ON operation while the other by D/ON)
This can be used for such a case that F3SJ should be temporarily disabled as the switch is so operated by a worker who puts an object at a carry-in entrance.

• Start Conditions

If both of the following 2 conditions are present, muting is activated.
1. No interrupting object is found in the F3SJ's detection zone, and safety output is ON.
2. After muting input 1 is turned ON (connected to 9 to 24V) from OFF, muting input 2 is turned ON (connected to 9 to 24V) from OFF within the muting input time limit T1max (3 sec.: can be changed to between 0.1 and 4 sec.). Order of muting inputs 1 and 2 is irrelevant.

When condition 1 is satisfied but time of condition 2 is not, a muting sequence error occurs and receivers muting error indicator turns ON.
A muting error is canceled when either of the following condition is satisfied.
Muting is started by a proper muting sequence.
Cycle the power back ON with muting input 1 OFF and muting input 2 ON.

• End Conditions

If either of the following condition is satisfied, muting state will be released.
1. Muting input 1 stays OFF for maximum muting input time with allowable waveform cracks T3 (0.1sec.) or longer.
2. Muting input 2 stays ON for maximum muting input time with allowable waveform cracks T3 (0.1sec.) or longer.
3. When muting continuance time exceeds muting time (60s: can be changed).

CHECK!

Muting state can be also released when the sensor enters lockout.

• For Wiring

Muting inputs 1 and 2 must be N.O. and N.C. contact types of heterogeneous redundant input system respectively are recommended.

• Wiring when using position detection muting mode and external device monitoring function

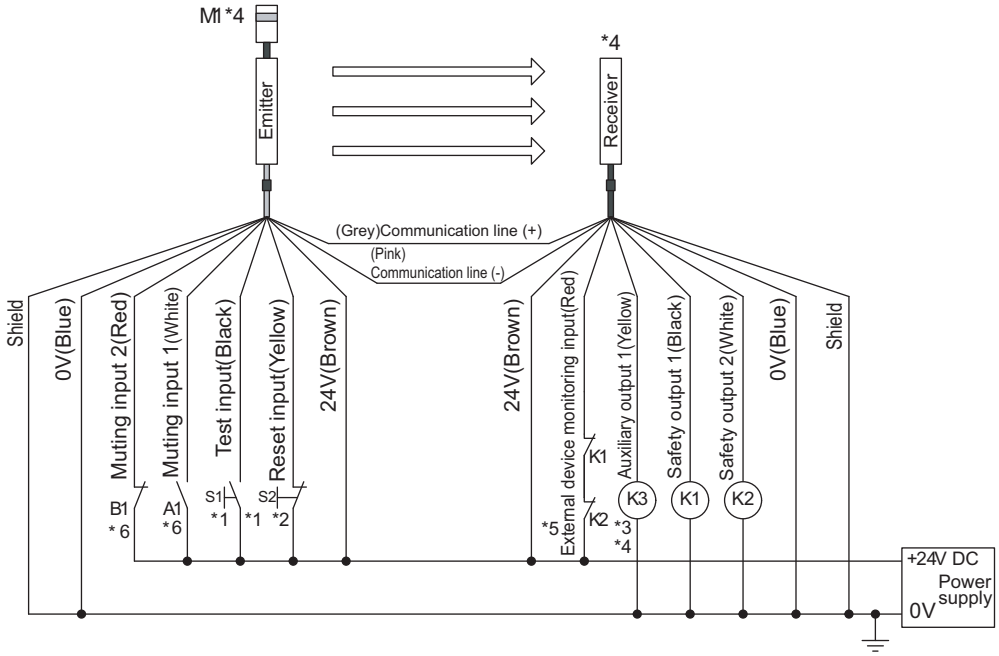

S1 : External test switch (connect to 0V if a switch is not required)
S2 : Lockout reset switch (connect to 24V if a switch is not required)
A1 : Limit switch, etc.
B1 : Limit switch, etc.
K1, K2 : Relay or other device that controls hazardous parts of the machine
K3 : Load or PLC, etc. (for monitoring)
M1 : Muting lamp

*1 Use a switch for micro loads (Input specifications: 24V, 1.0mA or less)
*2 Can work as an interlock reset switch when interlock function is used.
*3 F3SJ operates even when K3 is not connected.
*4 Connect a muting lamp to either of external indicator output or auxiliary output 1 of an emitter or a receiver. To connect a muting lamp to the auxiliary output 1, setting must be changed by the setting tool.
*5 When external device monitoring is not used, see below.
*6 Two-wire type muting sensor cannot be used.

Wiring When External Device Monitoring Function Is Not Required p.37

• Installation Example of Position Detection Muting Mode

Shown below is an installation example of position detection muting mode.

This is an application that places a workpiece on a machine's turntable surrounded by guard fence. When hazardous part of the machine is on the opposite side of a human body, safety function of F3SJ can be disabled so that an operator should be able to place a workpiece on the turntable.

1, Hazardous part of the machine is on the same side of a human body

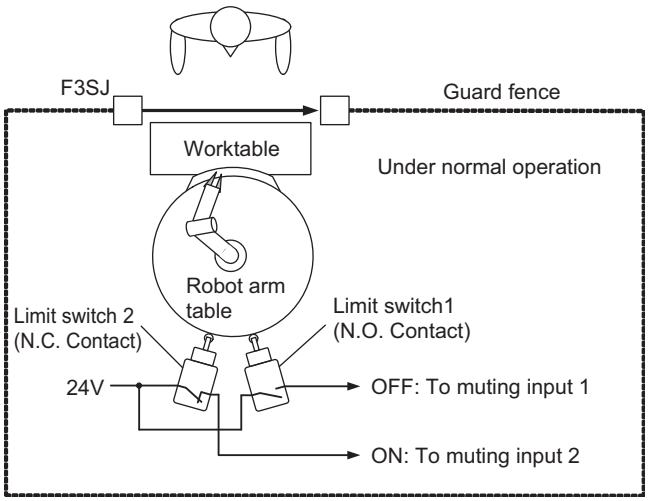

The limit switch 1 of N.O contact is open and the muting input 1 is OFF, and the limit switch 2 of N.C contact is short-circuited and the muting input 2 is ON, and safety function of F3SJ is being enabled.

2, Hazardous part of the machine is on the opposite side of a human body

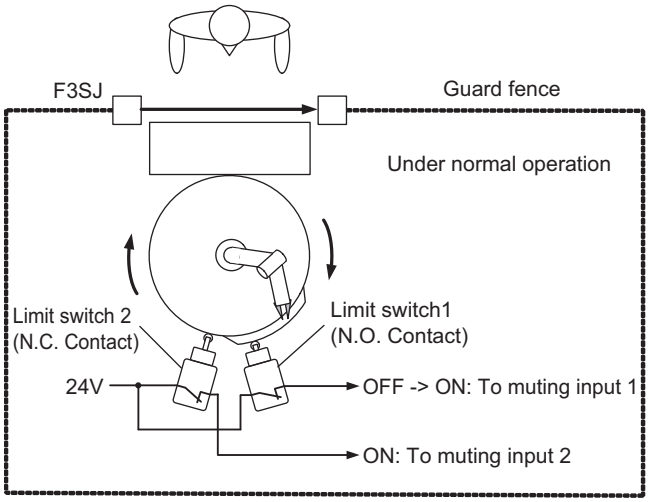

Rotation of a robot arm sets the muting input 1 from OFF to ON. Safety function of F3SJ is enabled.

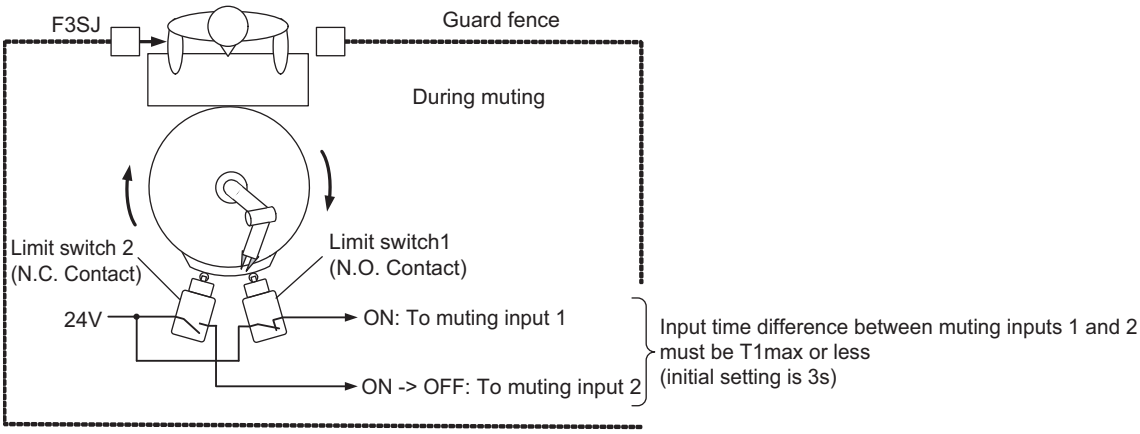

When the muting input 1 turns from OFF to ON and when the muting input 2 is turned from ON to OFF within T1max [s] before or after the muting input 1's turning ON, safety function of F3SJ is disabled. (Safety output is kept ON even if F3SJ is blocked)

Time t1 [s] for F3SJ to enter muting state is within a range shown below:

t1 < T1max. . . . . Formula (5) T1max [s] : Muting input time limit value (maximum)

CHECK! The PC tool for F3SJ can change T1max.

Timing Chart

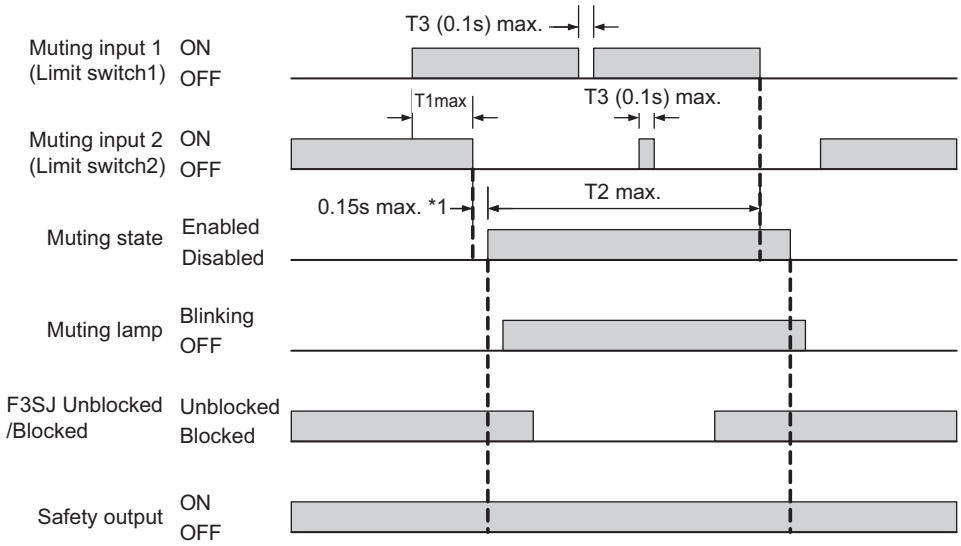

*1 The value is applied to a single sensor. Values for connected sensors are:

# of connections	*1 Value (s)
Single	0.15
2 connected	0.26
3 connected	0.29
4 connected	0.32

•T1max : Muting input time limit value (maximum)

Maximum time difference between muting inputs 1 and 2.

•T2 : Muting time limit

Time to be continued for muting function. If muting state exceeds this time, the function is canceled.

•T3 : Maximum muting input time with allowable waveform cracks

This is the maximum time limit allowed for waveform cracks for muting input 1 and muting input 2 when muting is in effect. It is set as 0.1s.

■ Setting Change

Setting items vary according to the mode.

Muting zone setting: Configure for each CH in case of a series connection.

Other than the above: Configure in a bulk in case of a series connection. (to be written into the primary sensor only)

Standard muting mode

Function	Initial Setting	Available Setup Item	Setting Console	PC Tool For F3SJ
Muting Zone Setting	All beams	1 to all beams	✓	✓
T1min: Muting input time limit (minimum value)	0.03s	0.03s, 0.1s to 3.9s (by 0.1s)	–	✓
T1max: Muting input time limit (maximum value)	3s	0.2s to 4s (by 0.1s)	–	✓
T2: Muting time limit	60s	1s to 600s (by 1s) or infinite	✓	✓

Exit only muting mode (PC tool for F3SJ only)

Function	Initial Setting	Available Setup Item	Setting Console	PC Tool For F3SJ
Muting Zone Setting	All beams	1 to all beams	–	✓
T1min: Muting input time limit (minimum value)	0.03s	0.03s, 0.1s to 3.9s (by 0.1s)	–	✓
T1max: Muting input time limit (maximum value)	3s	0.2s to 4s (by 0.1s)	–	✓
T2: Muting time limit	60s	1s to 600s (by 1s) or infinite	–	✓
T5: Exit only muting delay time	4s	0.1s to 4s (by 0.1s)	–	✓

Position detection muting mode (PC tool for F3SJ only)

Function	Initial Setting	Available Setup Item	Setting Console	PC Tool For F3SJ
Muting Zone Setting	All beams	1 to all beams	–	✓
T1min: Muting input time limit (maximum value)	3s	0.1s to 4s (by 0.1s)	–	✓
T2: Muting time limit	60s	1s to 600s (by 1s) or infinite	–	✓

CHECK!

If muting function is enabled, either output mode of external indicator output 1, 2, or auxiliary output 1 must be configured as shown below.

- Muting information
- Muting/override information

■ Limitation for Combination with Other Functions

You can use this function in combination with fixed blanking, floating blanking, and warning zone functions at the same time with the PC tool for F3SJ. Note that there is a limitation for setting with zones.

The setting console can be combined with fixed blanking function.

For details, see Setting Zone Adjacent Conditions p.88 .

Setting Zone Adjacent Conditions p.88

Override Function

Overview

Configures override function.

⚠ WARNING

The override function disables safety functions of the device. You must ensure safety using other measures during this function is enabled.

All external indicators that indicate state of override function must be installed where workers can see them from all the operating positions.

Install the switch that activates the override and that uses hold-to-run device, such as spring-return key switch, in a location that provides a clear view of the entire hazardous zone and where it cannot be activated from within the hazardous zone. Make sure that nobody is in the hazardous zone before activating the override function.

Override time must be properly configured for its application by a sufficiently trained and qualified person.

Example

•To extend override continuance time

Functional Description

• Override Function

The setting tool can disable override function. (Enabled for factory shipment)

Override Function p.48

• Override Time Limit

Override continuance time at the function's activation can be changed. (60s for factory shipment)

Setting Change

Configure in a bulk in case of a series connection. (to be written into the primary sensor only)

Function	Initial Setting	Available Setup Item	Setting Console	PC Tool For F3SJ
Override Function	Enabled	Enable/disable	–	✓
Override Time Limit	60s	1s to 600s (by 1s)	✓	✓

CHECK!

If override function is enabled, we recommend either output mode of external indicator output 1, 2, or auxiliary output 1 should be configured as shown below.

- Override information
- Muting/override information

Setting Zone Adjacent Conditions

If any two functions of muting, fixed blanking, floating blanking, or warning zone functions are used at the same time, the setting zones have limitations.

This section describes the limitations for following points:

1. Zone adjacent condition: If zones for multiple functions are configured adjacently
2. Zone overlap condition: If zones for multiple functions are configured as overlapped

1. Zone Adjacent Condition

A condition to configure setting zones as adjacent beams.

Except for some conditions, setting zones for these 4 functions can be configured adjacently by the PC tool for F3SJ.

The setting console cannot combine other functions than muting and fixed blanking functions.

Zone Adjacent Condition (configured by PC tool for F3SJ)

	Muting Function	Fixed Blanking Function	Floating Blanking Function	Warning Zone Function
Muting Function	-	✓	✓	✓
Fixed Blanking Function	✓	*2	*1	✓
Floating Blanking Function	✓	*1	-	✓
Warning Zone Function	✓	✓	✓	-

✓: Setup available

x: Setting not possible

*1 When following conditions are satisfied, setting zones cannot be adjacent.

1. Fixed blanking function: Fixed blanking allowable beam is configured
2. Floating blanking function: Floating blanking monitoring is enabled under sequential beam mode

If adjacent beam is fixed blanking allowable beam or floating blanking zone, they cannot be adjacent. (Figure 2)

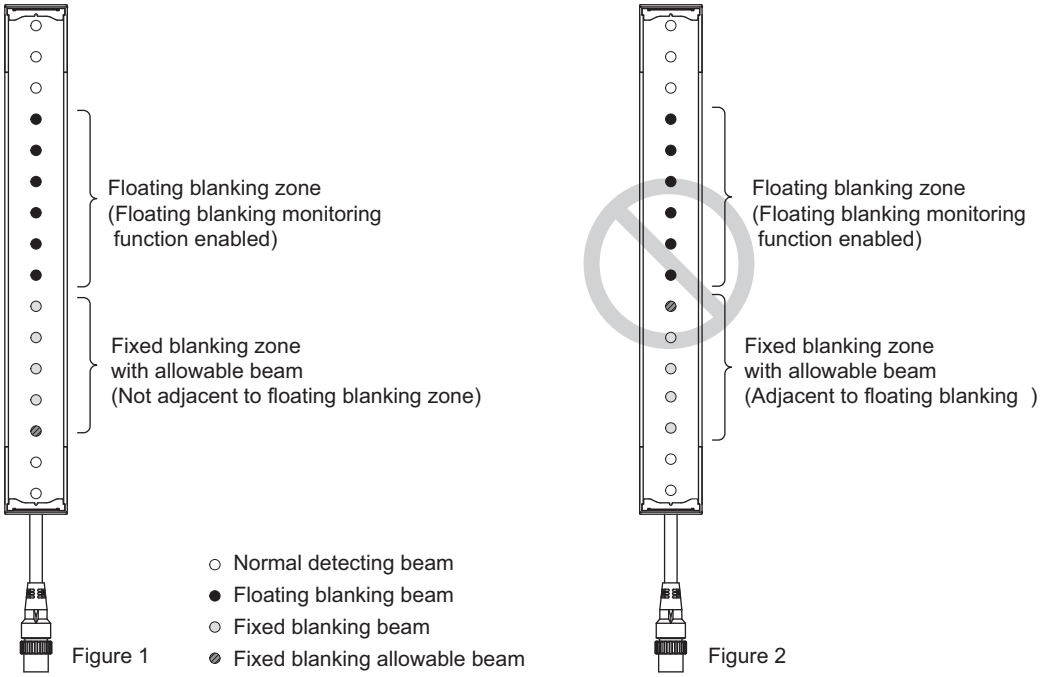

Figure 1 Figure 2

*2 For details about setting adjacent fixed blanking zones, see the section on fixed blanking.

Restriction Condition between Fixed Blanking Zones p.65

2. Zone Overlap Condition

A condition to configure setting zones as overlapped.

Except for combination of muting zone and fixed blanking zone (figure 3), setting zones of these 4 functions cannot be configured as overlapped. (Figure 4)

Zone overlap condition

	Muting Function	Fixed Blanking Function	Floating Blanking Function	Warning Zone Function
Muting Function	-	✓	x	x
Fixed Blanking Function	✓	x	x	x
Floating Blanking Function	x	x	-	x
Warning Zone Function	x	x	x	-

✓: Setup available

x: Setting not possible

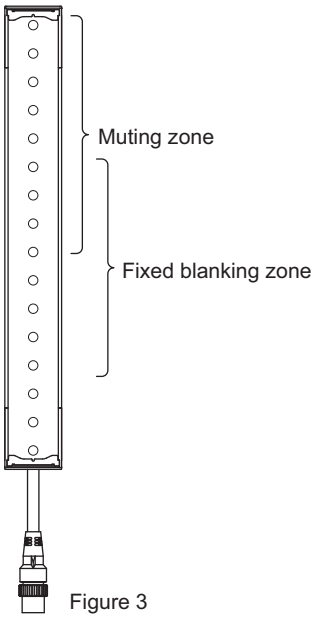

Figure 3

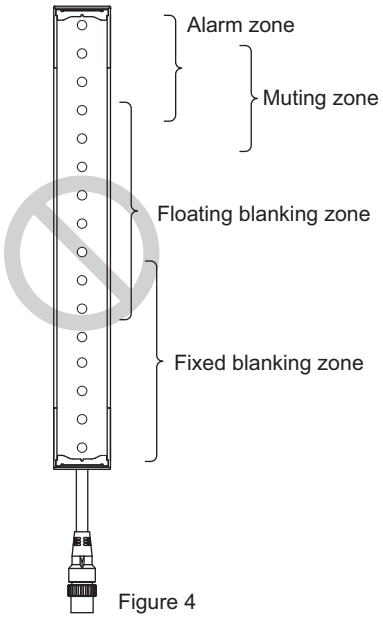

Figure 4

CHECK!

Even if a muting zone and a fixed blanking zone are configured as overlapped, fixed blanking monitoring function is effective. Thus a fixed blanking beam receives light under muting, operation is based on setting of the monitoring function.

Indicator/Input & Output Setting

Auxiliary Output (Non-Safety Output)

■ Overview

Auxiliary outputs 1 and 2 can be changed.

⚠ WARNING

Do not use auxiliary output or external indicator output for safety applications. Failure of these outputs may result in serious injury.

■ Example

•To assign lockout output or warning zone output to auxiliary output

•To blink an external indicator connected to auxiliary output

■ Functional Description

• Auxiliary Output (Non-Safety Output)

Chapter 2 Basic System Auxiliary Output (Non-Safety Output) p.28

• Output Operation Mode

Select output detail from auxiliary output.

• Reverse Output Mode

Reverses auxiliary output logic.

• Lighting-Up Pattern

Configures lighting-up/blinking pattern when connecting an indicator to auxiliary output.

• Auxiliary Output Diagnosis Function

Enabling auxiliary output diagnosis allows breakage*1 and short circuit detection*2 of auxiliary output 1.

Use incandescent lamp if you want to use an indicator connected to auxiliary output 1 and enable the diagnosis function.

*1 Breakage detection: When there is breakage of auxiliary output 1, F3SJ is transitioned to lockout.

*2 Short circuit detection:When there is short-circuit of auxiliary output 1, F3SJ is transitioned to lockout.

CHECK!

- If output operation mode and reverse output mode are used for other than initial setting, do not short-circuit by auxiliary output and external device monitoring input. When external device monitoring function is not used, disable the external device monitoring function.

External Device Monitoring Function p.98

- For auxiliary output 1 and 2, load current must be 300mA or less and 50mA or less respectively.

■ Setting Change

• Auxiliary Output 1

Configure in a bulk in case of a series connection. (to be written into the primary sensor only)

Function	Initial Setting	Available Setup Item	Setting Console	PC Tool For F3SJ
Output Operation Mode	Safety Output Information	See Output Operation Mode	✓	✓
Reverse Output Mode	Enabled	Enable/disable	✓	✓
Lighting-Up Pattern	ON	On/Blink[0.5s]/Blink[1.0s]/ Blink[2.0s]	✓	✓
Auxiliary Output Diagnosis Function	Disabled	Enable/disable	✓	✓

• Auxiliary Output 2

Function	Initial Setting	Available Setup Item	Setting Console	PC Tool For F3SJ
Output Operation Mode	Power-On Time Information (30,000 hours)	See table below	✓	✓
Reverse Output Mode	Disabled	Enable/disable	✓	✓

CHECK!

If F3SJ is used for a muting system, auxiliary output 2 cannot be used because it is used as muting input 2.

Muting System Wiring Diagrams p.36

■ Output Operation Mode (when assigned to auxiliary output and external indicator output)

Output Operation Mode	Operational Description (Output turns ON under following condition)	Setting Console	PC Tool Forpc tool for F3SJ
Safety Output Information	When safety output is ON	✓	✓
Light Level Diagnosis Information *1	When F3SJ is under ON state and light intensity is within a range from 100 to 130% of ON-threshold for 10 seconds or longer.	✓	✓
Error/Lockout Information	Under error/lockout state	✓	✓
Muting/Override Information	Under either muting or override state	✓	✓
Blanking/Warning Zone Information *2	When fixed blanking/floating blanking functions and warning zone function are enabled	✓	✓
Designated Beam Output Information *3	When designated beam is interrupted	–	✓
Power-On Time Information	When power-on time exceeds power-on time threshold	✓	✓
Warning Zone Information *4	When a warning zone is interrupted	✓	✓
Test input ON information	When test input is turned ON	✓	✓
Blanking Beam Incidence Information *5	When fixed blanking or floating blanking beams are incident	✓	✓
Interlock Information	Under interlock state	✓	✓
Muting Error Information	Under muting error state	✓	✓
Excess Load Switch Frequency Information	When the load switching frequency exceeds its threshold.	✓	✓
Information Trigger Information	Under either interlock, lockout, or muting error	–	✓
Connected Sensor Individual Output (1CH)	When safety output of 1CH under series connection is ON	✓(auxiliary output 1 only)	✓(auxiliary output 1 only)
Connected Sensor Individual Output (2CH)	When safety output of 2CH under series connection is ON	✓(auxiliary output 1 only)	✓(auxiliary output 1 only)
Connected Sensor Individual Output (3CH)	When safety output of 3CH under series connection is ON	✓(auxiliary output 1 only)	✓(auxiliary output 1 only)
Connected Sensor Individual Output(4CH)	When safety output of 4CH under series connection is ON	✓(auxiliary output 1 only)	✓(auxiliary output 1 only)

*1 Beams for which output does not turn ON when interrupted, such as fixed or floating blanking beams, are excluded. Evaluation is not performed during overriding as well.
*2 Fixed blanking or floating blanking beam setting is required.
*3 Designated beam setting is required.
*4 Warning Zone beam setting is required.
*5 ON state is kept until the sensor is reset by power cycle or the reset input.

- Fixed Blanking Function p.62
- Floating Blanking Function p.66
- Designated Beam Output Function p.93
- Warning Zone Function p.74

CHECK!
If "designated beam output information" is assigned for output operation mode of auxiliary outputs 1 or 2 or external indicator outputs 1 or 2, these cannot be assigned to other output operation.

Designated Beam Output Function

■ Overview

Incidence/interruption information of a given beam can be output. This function is for the PC tool for F3SJ only.

■ Example

•To turn an external indicator ON when a specified beam of F3SJ is interrupted
•To provide an auxiliary output when a specified beam of F3SJ is receiving light

■ Functional Description

• Designated Beam Output Function

If one or more specified beams are interrupted or receiving light, the state of interruption/reception can be provided as an auxiliary output or an external indicator output operation.
Note that a designated beam output must be assigned to an output operation mode.

- Auxiliary Output (Non-Safety Output) p.91
- External Indicator Output (Non-Safety Output) p.95

• Designated Beam Zone Setting

Use this setting to set the beams to use as designated beams.
With an interrupting object in the appropriate position, it is possible to perform teaching and designate beams manually.

• Designated Beam Incidence State

Specifies output status of a designated beam whether it is receiving light or interrupted.
ON when interrupted: Output turns ON if one or more beams are interrupted.
ON when receiving: Output turns ON if one or more beams are receiving light.

■ Setting Change

Configure for each CH in case of a series connection.

Function	Initial Setting	Available Setup Item	Setting Console	PC Tool For F3SJ
Designated Beam Zone Setting	0	Any beam	–	✓
Designated Beam Incidence State	ON when Interrupted	ON when Interrupted/On when receiving	–	✓

CHECK!

- If you need output of designated beam's incidence/interruption status, set output mode of auxiliary output or external indicator output to designated beam information.
  - Auxiliary Output (Non-Safety Output) p.91
  - External Indicator Output (Non-Safety Output) p.95
- Combination of reverse output mode of external indicator output or auxiliary output enables setting of designated beam output as shown below.

Designated Beam Incidence State	Reverse Output Mode: Disabled	Reverse Output Mode: Enabled
ON when Interrupted	ON if 1 or more beams are interrupted (OFF when all beams are receiving light)	OFF even if 1 or more beams are interrupted (ON when all beams are receiving light)
ON when Receiving Light	ON if 1 or more beams are receiving light (OFF when all beams are interrupted)	OFF if 1 or more beams are receiving light (ON when all beams are interrupted)

• Operation Example

Designated beam incidence state: ON when interrupted

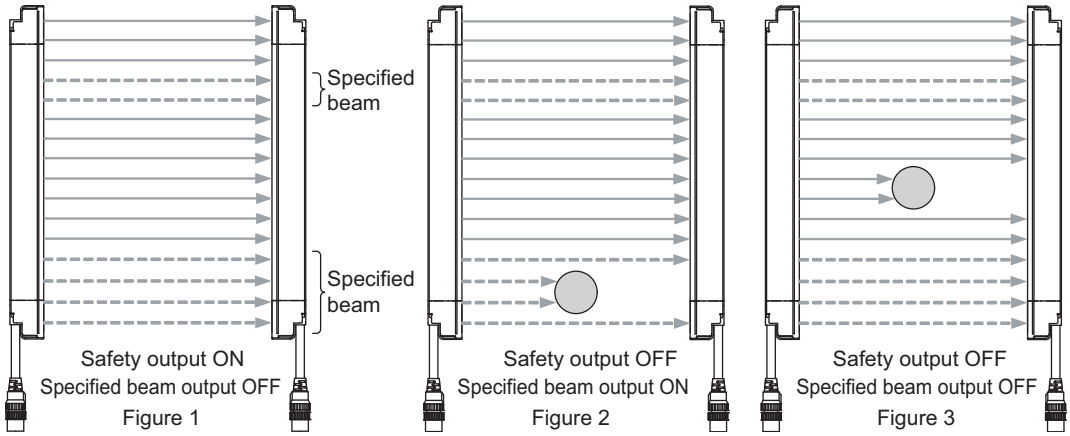

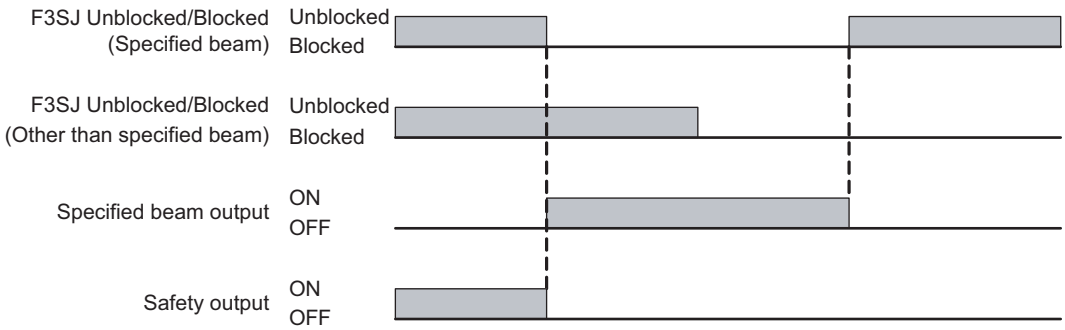

External Indicator Output (Non-Safety Output)

■ Overview

External indicator output detail and lighting-up pattern can be configured.

⚠ WARNING

Do not use the auxiliary output or external indicator output for safety applications. Failure of these outputs may result in serious injury.

■ Example

•To set an external indicator to blink when a warning zone is interrupted

•To turn an external indicator ON when F3SJ surface is dirty

■ Functional Description

• External Indicator Output

Attaching External Indicators p.124

• Output Operation Mode

Selects output detail from external indicator output.

• Reverse Output Mode

Reverses external indicator output.

• Lighting-Up Pattern

Sets external indicator output detail and lighting-up pattern.

• External Indicator Output Diagnosis Function

Enabling external indicator output diagnosis allows breakage*1 and short circuit detection*2 of external indicator or muting lamp connected to the output.

Use incandescent lamp if you want to enable external indicator output diagnosis function.

If the diagnosis function is enabled while no external indicator is connected to an emitter nor a receiver, lockout (external indicator output error) should occur.

*1breakage detection: When there is breakage between output terminals for external indicator, F3SJ is transitioned to lockout.

*2Short circuit detection: When there is short-circuit between output terminals for external indicator, F3SJ is transitioned to lockout.

■ Setting Change

• External Indicator 1 (Receiver Side)

Configure in a bulk in case of a series connection. (to be written into the primary sensor only)

Function	Initial Setting	Available Setup Item	Setting Console	PC Tool For F3SJ
Output Operation Mode	Safety Output Information*1	See Output Operation Mode	✓	✓
Reverse Output Mode	Enabled *2	Enable/disable	✓	✓
Lighting-Up Pattern	ON *3	On/Blink[0.5s]/Blink[1.0s]/Blink[2.0s]	✓	✓
External Indicator Output Diagnosis Function	Disabled	Enable/disable	✓	✓

• External Indicator 2 (Emitter Side)

Function	Initial Setting	Available Setup Item	Setting Console	PC Tool For F3SJ
Output Operation Mode	Error/Lockout Information *1	See Output Operation Mode	✓	✓
Reverse Output Mode	Disabled *2	Enable/disable	✓	✓
Lighting-Up Pattern	ON *3	On/Blink[0.5s]/Blink[1.0s]/Blink[2.0s]	✓	✓
External Indicator Output Diagnosis Function	Disabled	Enable/disable	✓	✓

*1 For a muting system, muting/override information is set.

*2 For a muting system, it is configured as disabled.

*3 For a muting system, it is configured as blinking [1.0s].

■ Output Operation Mode

See Chapter 3 Auxiliary Output (Non-Safety Output) p.91 Output Operation Mode.

Output Operation Mode p.92

Interlock Function

■ Overview

Start and restart interlock functions can be configured.

⚠ WARNING

Install the interlock reset switch in a location that provides a clear view of the entire hazardous zone and where it cannot be activated from within the hazardous zone.

■ Example

•To operate a machine after power-on and inspection

•To restart a machine after safety check when F3SJ was blocked and the machine stopped

■ Functional Description

• Interlock Function

Chapter 2 Interlock Function p.25

• Start Interlock

With this setting, F3SJ enters interlock only when power is turned ON. Applying reset input can release interlock state when no interrupting object exists in the detection zone. This can be used to operate a machine after power-on and inspection.

• Restart Interlock

With this setting, F3SJ enters interlock state only when the sensor is interrupted. Applying reset input can release interlock state when no interrupting object exists in the detection zone. If F3SJ is blocked, the machine can be restarted after safety is ensured.

• Interlock Reset

For basic system: Apply voltage of 9 to Vs (nominal 24V) for 250ms or longer to the reset input line, and set it open or apply 0 to 1.5V.

For muting system: Open or apply voltage of 0 to 1.5V for 450ms or longer to the reset input line, and apply 9V to Vs (nominal 24V) again.

■ Setting Change

• For Basic System

Configure in a bulk in case of a series connection. (to be written into the primary sensor only)

Function	Initial Setting	Available Setup Item	Setting Console	PC Tool For F3SJ
Start Interlock	Enabled	Enable/disable	✓	✓
Restart Interlock	Enabled	Enable/disable	✓	✓

CHECK!

If wiring is for auto reset, the interlock function won't work regardless of these functional settings.

• For Muting System

Function	Initial Setting	Available Setup Item	Setting Console	PC Tool For F3SJ
Start Interlock	Disabled	Enable/disable	✓	✓
Restart Interlock	Disabled	Enable/disable	✓	✓

CHECK!

Interlock state can be provided to auxiliary output or external indicator output.

- Auxiliary Output (Non-Safety Output) p.91
- External Indicator Output (Non-Safety Output) p.95

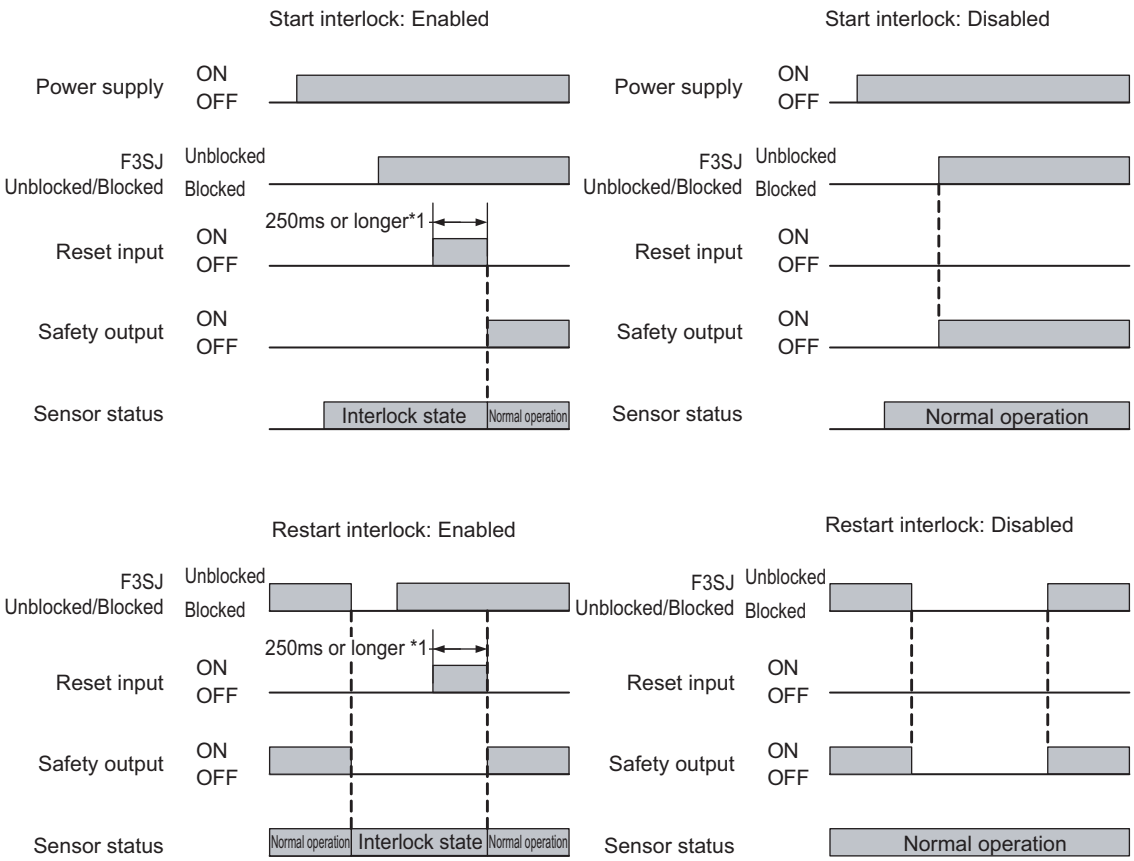

*1 For a muting system, 450ms or more.

External Device Monitoring Function

■ Overview

Settings for external device monitoring function can be changed.

■ Example

•To adjust allowable delay time to a device's response time

■ Functional Description

• External Device Monitoring Function

External Device Monitoring Function p.30

• Allowable Delay Time

Specifies the maximum allowed value of external device operation time T1 after safety output changes. Lockout state occurs if the external device monitoring input does not change when the time exceeds this maximum value.

When a short allowable delay time is set, there is a possibility of lockout (external device monitoring error) occurring in cases such as when F3SJs are connected in series.

When setting a short allowable delay time, set it so that it is equal to or greater than the F3SJ OFF response time (from ON to OFF).

Also, the history of the allowable delay time can be displayed for the PC tool for F3SJ only.

CHECK!

External device input information can be provided to auxiliary output or external indicator output.

- Auxiliary Output (Non-Safety Output) p.91
- External Indicator Output (Non-Safety Output) p.95

■ Setting Change

Configure in a bulk in case of a series connection. (to be written into the primary sensor only)

Function	Initial Setting	Available Setup Item	Setting Console	PC Tool For F3SJ
External Device Monitoring Function	Enabled	Enable/disable	✓	✓
Allowable Delay Time	0.3s	0.1 to 2.5s (by 0.1s)	✓	✓

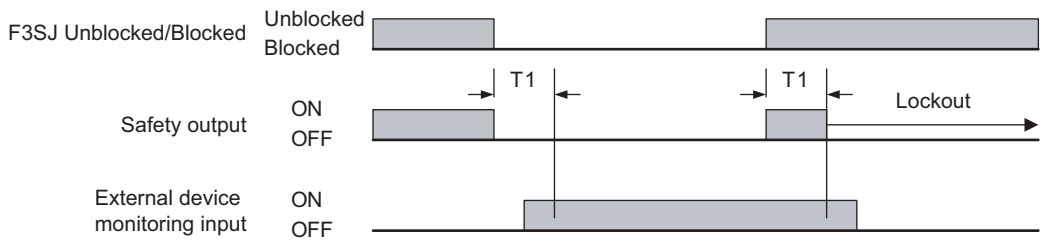

T1: Allowable delay time

Operating Range Change

Operating Range Change Function

■ Overview

Can set F3SJ's operating range shorter.

■ Example

•To set shorter operating range for F3SJ to prevent other photoelectric sensor to be affected
•To set shorter operating range for short installation distance to prevent mutual interference

■ Functional Description

• Operating Range

Setting for operating range can be selected from 0.5m, 1m, 2m, 3m, 5m, and MAX (7m or 9m).
Best operating range can be configured for installation distance.

MAX indicates rated operating range.

Rated Operating Range
F3SJ-A□□□□Pxx : If □□□□ ≤ 1649; 9m
F3SJ-A□□□□Pxx : If □□□□ ≥ 1655; 7m

CHECK! Setting shorter operating range for F3SJ can reduce emission light intensity thus influence on other photoelectric sensor. At the same time, F3SJ's threshold value is improved, reducing influence from other photoelectric sensor.

■ Setting Change

Configure for each CH in case of a series connection.

Function	Initial Setting	Available Setup Item	Setting Console	PC Tool For F3SJ
Operating Range Change Function	MAX	0.5m, 1m, 2m, 3m, 5m, and MAX (7m or 9m)	✓	✓

CHECK! In case of series connection, it must be configured for each F3SJ.
- Auxiliary Output (Non-Safety Output) p.91
- External Indicator Output (Non-Safety Output) p.95

• Setting Example

Optimizing operating range prevents influence on other photoelectric sensor.

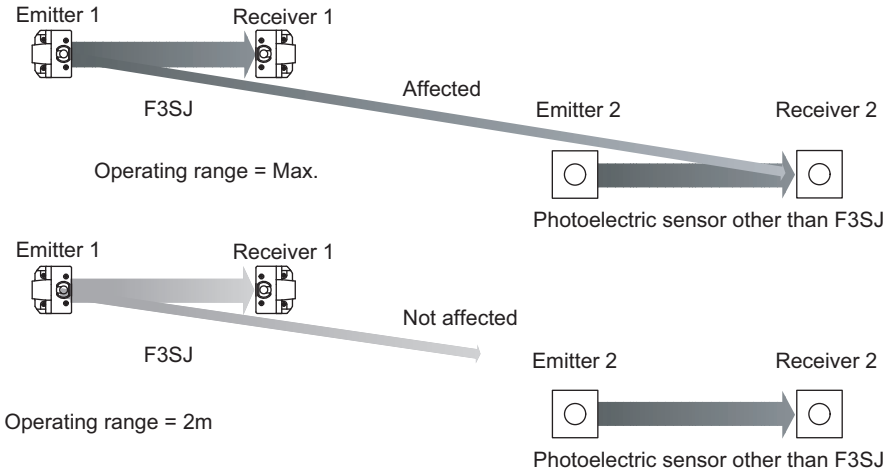

Operation Monitoring

Incident Light Level Display

■ Overview

Provides readout of F3SJ's receiving light intensity.

■ Example

To adjust beams while checking F3SJ's receiving light intensity.

■ Functional Description

• Incident Light Level Display

Provides indication of F3SJ's receiving light intensity.

Receiving light intensity indication can be checked by the setting tool.

■ Setting Change

Configure for each CH in case of a series connection.

Function	Initial Setting	Available Setup Item	Setting Console	PC Tool For F3SJ
Incident Light Level Display	Read only		✓	✓

Disturbance Light Level Display

■ Overview

Disturbance light from other photoelectric sensor into F3SJ can be read out.

■ Example

To take measure against disturbance light from other nearby photoelectric sensor or adjacent F3SJ

■ Functional Description

• Disturbance Light Level Display

Indicates disturbance light intensity from other photoelectric sensor into F3SJ.

You can identify an photoelectric sensor causing the disturbance light and an affected beam.

CHECK! Incident light level cannot be displayed because emission stops when the disturbance light level display is used.

■ Setting Change

Configure for each CH in case of a series connection.

Function	Initial Setting	Available Setup Item	Setting Console	PC Tool For F3SJ
Disturbance Light Level Display	Read only		✓	✓

Status Information Display

■ Overview

Provides readout of F3SJ's I/O information and status. This function is for the PC tool for F3SJ only.

■ Functional Description

F3SJ's I/O information and status can be read out by the PC tool for F3SJ.

■ Setting Change

Configure in a bulk in case of a series connection. (to be written into the primary sensor only)

Function	Initial Setting	Available Setup Item	Setting Console	PC Tool For F3SJ
Status Monitor	Read only		–	✓

Information available to read

F3SJ Status	Description
Test Input	Linked to test input
Reset Input	Linked to reset input
Interlock Selection Input	Linked to interlock selection input
Muting Input 1	Linked to muting input 1 (for a muting system)
Muting Input 2	Linked to muting input 2 (for a muting system)
Safety Output 1 *1	Linked to safety output 1
Safety Output 2 *1	Linked to safety output 2
Auxiliary Output 1	Linked to auxiliary output 1
Auxiliary Output 2	Linked to auxiliary output 2
External Indicator (Emitter)	Linked to external indicator output 1
External Indicator (Receiver)	Linked to external indicator output 2
Incident Light Level Indicator	Indicates light intensity level indicator
Interlock state	Displayed when in interlock
Source Voltage	Indicates supplied source voltage
Muting state	ON when muting
Muting error state	ON when there is a muting error
Override state	ON when in override
Blanking beam incidence state	ON when blanking beam is incident
Light level diagnosis information	When F3SJ is ON and the incident light level is 130% or less of the ON threshold value for 10 seconds or more

*1 When the F3SJ is in maintenance status, the actual safety output does not turn ON even when the output status of the safety output is ON.

Maintenance Information

Error History

■ Overview

Details of errors that occurred in the past are displayed.

■ Functional Description

The PC tool for F3SJ can display the past 20 error codes, and the setting console can display the past 10 error codes.The PC setting tool for F3SJ can record error codes as well as F3SJ's internal temperature, which can be displayed too. For an explanation of the error codes, refer to the troubleshooting section at the end of this manual.

Troubleshooting p.184

■ Monitor Items

Configure for each CH in case of a series connection.

Function	Setting Console	PC Tool For F3SJ
Error history	✓	✓

CHECK!

- When the setting tool is connected while power is being supplied to the F3SJ, the F3SJ enters communication error lockout. When checking errors in the error log, ignore the error that occurred most recently and check the second or earlier errors.
- When an error occurred, a supply voltage error may be recorded in addition to the original error code if supply voltage is out of specification range.

Power-on Time

■ Overview

The power-on time of the F3SJ is displayed.

■ Functional Description

Data related to the power-on time of the F3SJ is recorded in the F3SJ main unit every 15 minutes. The record is made when in normal operation or during lockout. By knowing the power-on time, you can better understand when to schedule F3SJ maintenance.

- Power-on time

  This is the current power-on time since the power-on time was last reset. If the power-on time has never been reset, this value is the same as the accumulated power-on time. This value can be checked for an emitter and a receiver separately.

- Power-on time threshold value

  When the power-on time exceeds this value, output can be performed to the auxiliary output or the external indicator output.

  Note that the power-on time information must be assigned to an output mode.

  (In the initial settings, it is assigned to auxiliary output 2.)

- Auxiliary Output (Non-Safety Output) p.91
- External Indicator Output (Non-Safety Output) p.95

- Accumulated power-on time
  This value represents the cumulative power-on time, from the time that the power was first supplied until the present. It is not possible to reset this value using the power-on time reset function.

- Power-on time reset
  This function can reset the power-on time of the F3SJ to 0. In the case of series connection, the power-on time can be reset for each F3SJ CH.

■ Monitor Items

Configure or display for each CH in case of a series connection.

Function	Initial Setting	Available Setup Item	Setting Console	PC Tool For F3SJ
Power-on time	Read out only		✓	✓
Power-on time threshold value	30,000 hours	Setting Console: 100 to 999,900 hours (by 100 hours) PC Tool for F3SJ: 100 to 1,000,000 hours (by 100 hours)	✓	✓
Accumulated power-on time	Read out only		✓	✓
Power-on time reset	–	Reset	✓	✓

Load Switching Frequency

Overview

This value represents load switching frequency connected to F3SJ.

Functional Description

The number of times the F3SJ safety output has switched from ON to OFF is recorded in the F3SJ main unit every 15 minutes. The record is made when in normal operation or during lockout. By monitoring the number of times the safety output has switched from ON to OFF, you can understand the number of responses that have been made by the relays and contactors connected to the F3SJ.

- Load switching frequency
  This value represents load switching frequency connected to F3SJ. In the case of series connection, load switching frequency can be displayed for each F3SJ CH.

- Load switching frequency threshold value
  When load switching frequency exceeds this value, output can be performed to the auxiliary output or the external indicator output.
  Note that excess load switching frequency information must be assigned to an output operation mode.

- Auxiliary Output (Non-Safety Output) p.91
- External Indicator Output (Non-Safety Output) p.95

- Accumulated load switching frequency
  This value indicates the cumulative value for load switching frequency, from the time that power was first supplied to the F3SJ until the present.
  It is not possible to reset this value using load switching frequency reset function.

- Load switching frequency reset
  This function resets load switching frequency recorded in the F3SJ. Use this reset function whenever you install or replace relays or contactors.

Monitor Items

Configure in a bulk or display in case of a series connection. (to be written into the primary sensor only)

Function	Initial Setting	Available Setup Item	Setting Console	PC Tool For F3SJ
Load switching frequency	Read out only		–	✓
Load switching frequency threshold value	100,000 times	1,000 to 4,000,000 times (by 1,000 unit)	–	✓
Accumulated load switching frequency	Read out only		✓	✓
Load switching frequency reset	–	Reset	✓	✓

Setting Recovery

Setting Recovery Function

⚠ WARNING

A sufficiently trained and qualified person must perform setting recovery. Incorrect setting may cause a person to go undetected, resulting in serious injury.

To reset the configuration to previous one, safety distance may get longer. Always verify recalculation of safety distance and intended operation of F3SJ based on the change.

■ Overview

Resets F3SJ's settings to the factory shipment values or previous setting values.

■ Example

To reset the configuration because the settings were forgotten

■ Functional Description

- Setting Recovery Function

By performing the setting recovery function, the setting console can be used to restore the F3SJ's configuration to the factory settings. With the PC tool for F3SJ, the factory settings or the previous settings (before the most recent change) can be restored.

■ Setting Change

Function	Initial Setting	Available Setup Item	Setting Console	PC Tool For F3SJ
Setting Recovery Function	–	Factory Shipment Setting/ Previous Setting	✓ (Factory shipment setting only)	✓

Other

Safety Distance Calculation Function

■ Overview

The safety distance specified by the international standard ISO13855-2002 (European standard EN999) is calculated.

■ Functional Description

This function displays the safety distance based on the international standard ISO13855-2002 (European standard EN999), according to the conditions that are input. This function is available only for the PC tool for F3SJ.

■ Monitor Items

Function	Setting Console	PC Tool For F3SJ
Safety distance calculation function	–	✓

Connection Cable Length Calculation Function

■ Overview

This function displays the connection cable's extendable length, which varies according to the F3SJ configuration.

■ Functional Description

The function displays the extendable length of the cable (excluding the length of cables between series connections), according to the conditions that are input. For series connections, the maximum extendable length is 15 meters. This function is available only for the PC tool for F3SJ.

■ Monitor Items

Function	Setting Console	PC Tool For F3SJ
Connection cable extension calculation function	–	✓

Power Cable Length p.19

Rated Response Time Check

■ Overview

The rated response time of the F3SJ is displayed.

■ Functional Description

This function displays the OFF response time (from ON to OFF) and the ON response time (from OFF to ON) by connecting the F3SJ whose response time you want to check. If the F3SJ are in a series connection, the response time for all F3SJ connected in series is shown.

■ Monitor Items

Function	Setting Console	PC Tool For F3SJ
Rated response time check	✓	✓

Chapter4 Wiring/Installation

Installation Conditions 110

Detection Zone and Approach 110
Safety Distance 111
Distance from Reflective Surfaces 116
Mutual Interference Prevention 117

Series Connection 120

Connection Procedure 122

Attaching External Indicators 124

Connection Procedure 124
Output Operation 125
Setting Change by the Setting Tool 125

Dimensions 126

When Using Standard Mounting Brackets 126
When Using Optional Mounting Brackets 129
When Using Spatter Protection Covers 146
Setting Tool 147
Mounting a Protect Bar 148
Mounting an Environment-Resistant Case 150

Mounting 152

Top/Bottom Mounting Brackets 152
Intermediate Mounting Brackets 152
Mounting Procedure 153
Adjustment Procedure 156

Wiring 157

Wiring Precautions 157
Power Supply Unit 158
Wiring Procedure 159

Installation Conditions

Detection Zone and Approach

⚠ WARNING

Install a protective structure so that the hazardous part of a machine can only be reached by passing through the sensor's detection zone. Install the sensors so that part of the person is always present in the detection zone when working in a machine's hazardous zones. If a person is able to step into the hazardous zone of a machine and remain behind the F3SJ's detection zone, configure the system with an interlock function that prevents the machine from being restarted. Failure to do so may result in serious injury.

Do not use this sensor for machines that cannot be stopped by electrical control. For example, do not use it for a pressing machine that uses a full-rotation clutch. Otherwise, the machine may not stop before a person reaches the hazardous part, resulting in serious injury.

To use the F3SJ in PSDI mode (Reinitiation of cyclic operation by the protective equipment), you must configure an appropriate circuit between the F3SJ and the machine. For details about PSDI, refer to OSHA1910.217, IEC61496-1, and other relevant standards and regulations.

Install the interlock reset switch in a location that provides a clear view of the entire hazardous zone and where it cannot be activated from within the hazardous zone.

Do not use the F3SJ in environments where flammable or explosive gases are present. Doing so may cause an explosion.

The F3SJ cannot protect a person from an object flying from a hazardous zone. Install protective cover(s) or fence(s).

Make sure that the F3SJ is securely mounted and its cables and connectors are properly connected.

Correct installation

The hazardous zone of a machine can be reached only by passing through the sensor's detection zone.

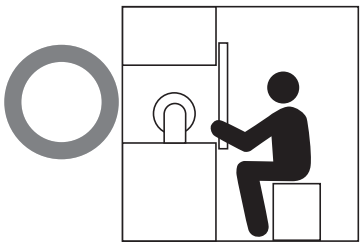

While working, a person is inside the sensor's detection zone.

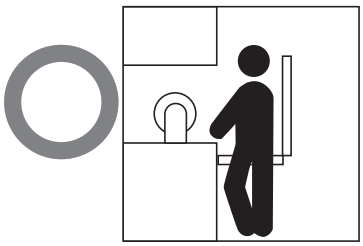

Incorrect installation

It is possible to reach the hazardous zone of a machine without passing through the sensor's detection zone.

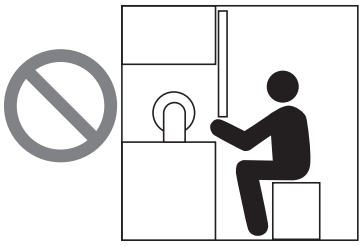

A person is between the sensor's detection zone and the hazardous zone of a machine.

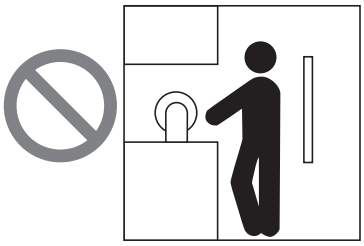

Safety Distance

The safety distance is the distance that must be set between the F3SJ and a machine's hazardous part to stop the hazardous part before a person or object reaches it. The safety distance varies according to the standards of each country and the individual specifications of each machine. Always refer to the relevant standards.

⚠ WARNING

Make sure to secure the safety distance (S) between the F3SJ and the hazardous part. Otherwise, the machine may not stop before a person reaches the hazardous part, resulting in serious injury.

CHECK!

The response time of a machine is the time period from when the machine receives a stop signal to when the machine's hazardous part stops. Measure the response time on the actual system. Also, periodically check that the response time of the machine has not changed.

■ How to calculate the safety distance specified by International Standard ISO 13855 (European standard EN ISO 13855)(Reference)

<u>If a person approaches the detection zone of the F3SJ perpendicularly</u>

S = K x T + C . . . Formula (1)

- S: Safety distance
- K: Approach speed to the detection zone
- T: Total response time of the machine and F3SJ
- C: Additional distance calculated by the detection capability of the F3SJ

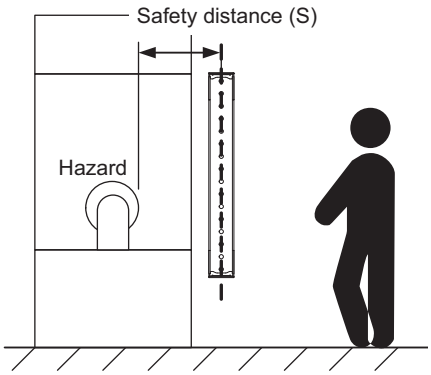

<System that has detection capability of 40mm or less>

Use K = 2,000mm/s and C = 8 x (d - 14mm) in formula (1) for the calculation.

S = 2,000mm/s x (Tm + Ts) + 8 x (d - 14mm)

•S = Safety distance (mm)

•Tm = Machine's response time (s)

•Ts = Response time of the F3SJ from ON to OFF (s)

•d = Detection capability of the F3SJ (mm)

[Calculation example]

When Tm = 0.05s, Ts = 0.01s, and d = 14mm:

S=2,000mm/s x (0.05s + 0.01s) + 8 x (14mm - 14mm)

= 120mm . . . Formula (2)

If the result < 100mm, use S = 100mm.

If the result exceeds 500mm, use the following expression where K = 1,600mm/s.

S=1,600mm/s x (Tm + Ts) + 8 x (d - 14mm) . . . Formula (3)

If the result of this formula (3) < 500mm, use S = 500mm.

<A system with larger detection capability than 40mm>

Calculate by using Formula (1) with K = 1,600mm/s and C = 850mm:

S = 1,600mm/s x (Tm + Ts) + 850 . . . Formula (4)

•S = Safety distance (mm)

•Tm = Response time of the machine (s)
•Ts = F3SJ's response time from ON to OFF (s)

[Example]
If Tm = 0.05s and Ts = 0.01s:
S = 1,600mm/s x (0.05s + 0.01s) + 850mm
= 946mm

Possible circumventing by reaching over the detection zone

If access to the hazardous zone by reaching over the detection zone of vertically mounted F3SJ cannot be excluded, the height and the safety distance, S, of the F3SJ shall be determined. S shall be determined by comparison of the calculated values in If a person approaches the detection zone of the F3SJ perpendicularly. The greater value resulting from this comparison shall be applied.

S=(K × T) + Cro . . . Formula (5)
•S: Safety distance
•K: Approach speed to the detection zone
•T: Total response time of the machine and F3SJ
•Cro: Approach distance based on the distance which personnel can move towards the hazardous zone of a machine by reaching over the detection zone. The distance is determined in the table below based on the height of the hazardous zone, a, and the height of the upper edge of the detection zone, b.

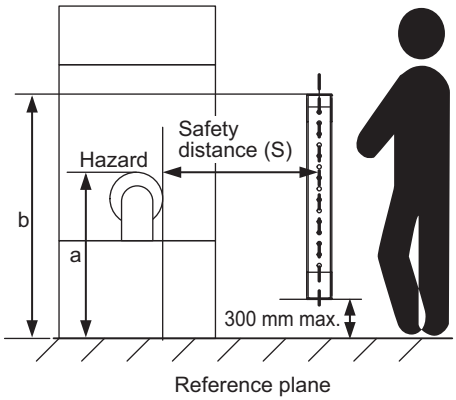

Note:Lower edge of the detection zone above 300 mm in relation to the reference plane does not offer sufficient protection against crawling below.

First, use K = 2,000 mm/s in formula (5) for the calculation. If the result of this calculation is less than 100 mm, use S = 100 mm.
If the result exceeds 500 mm, use K = 1,600 mm/s to recalculate it. If the result of the recalculation is less than 500 mm, use S = 500 mm.

Height of hazardous zone, a	Height of upper edge of detection zone, b											
	900	1000	1100	1200	1300	1400	1600	1800	2000	2200	2400	2600
	Additional distance to hazardous zone, Cro											
2600	0	0	0	0	0	0	0	0	0	0	0	0
2500	400	400	350	300	300	300	300	300	250	150	100	0
2400	550	550	550	500	450	450	400	400	300	250	100	0
2200	800	750	750	700	650	650	600	550	400	250	0	0
2000	950	950	850	850	800	750	700	550	400	0	0	0
1800	1100	1100	950	950	850	800	750	550	0	0	0	0
1600	1150	1150	1100	1000	900	850	750	450	0	0	0	0
1400	1200	1200	1100	1000	900	850	650	0	0	0	0	0
1200	1200	1200	1100	1000	850	800	0	0	0	0	0	0
1000	1200	1150	1050	950	750	700	0	0	0	0	0	0
800	1150	1050	950	800	500	450	0	0	0	0	0	0
600	1050	950	750	550	0	0	0	0	0	0	0	0
400	900	700	0	0	0	0	0	0	0	0	0	0
200	600	0	0	0	0	0	0	0	0	0	0	0
0	0	0	0	0	0	0	0	0	0	0	0	0

Note 1.Upper edge of the detection zone below 900 mm is not included since they do not offer sufficient protection against circumventing or stepping over.

Note 2.When determining the values of this table, it shall not be interpolated. If the known values a, b or Cro are between two values of this table, the greater safety distance shall be used.

[Calculation example]

- T: Tm + Ts (s)
- Tm: Machine's response time (s)
- Ts: Response time of the F3SJ from ON to OFF (s)
- a: Height of machine hazardous zone (mm)
- b: Height of upper edge of detection zone (mm)

When Tm = 0.05 s, Ts = 0.01 s, a = 1,400 mm, b = 1,500 m:
From the table above, Cro = 850 mm. Since b is between 1,400 mm and 1,600 mm, b = 1,400 mm which has the greater Cro value, shall be used.
S = 2,000 mm/s × (0.05 s + 0.01 s) + 850 mm
= 970 mm
Since 970 mm is greater than 500 mm, use K = 1,600 mm/s and recalculate it.
S = 1,600 m/s × (0.05 s + 0.01 s) + 850 mm
= 946 mm

Compare S = 946 mm with the calculation in "If a person approaches the detection zone of the F3SJ perpendicularly", and choose the larger value as the safety distance.
For the system with a detection capability of 40 mm max., the safety distance S is 946 mm since this is larger than S = 120 mm calculated in the calculation example of "If a person approaches the detection zone of the F3SJ perpendicularly".
For the system with a detection capability larger than 40 mm, the safety distance S is 946 mm since this is the same value as S = 946 mm calculated in the calculation example of "If a person approaches the detection zone of the F3SJ perpendicularly".

In case of horizontal approach of a human body to F3SJ's detection zone

Use K = 1,600mm/s and C = (1200 - 0.4 x H) in formula (1) for calculation.Note that C must not be less than 850mm.
S = 1,600mm/s x (Tm + Ts) + 1200 - 0.4 x H
•S = Safety distance (mm)
•Tm = Machine's response time (s)
•Ts = Response time of F3SJ from ON to OFF (s)
•H = Installation height (mm)
Note that H must satisfy:
1000 >= H >= 15 (d - 50mm) >= 0mm

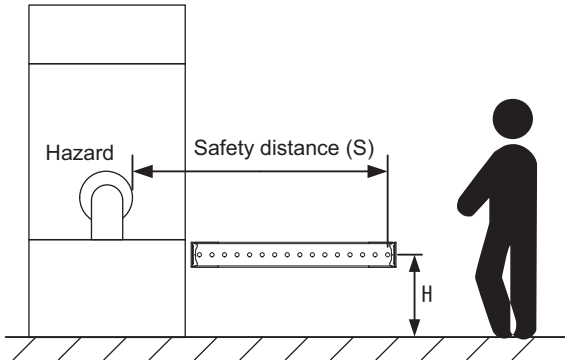

Also, you must include a hazardous condition under which a person may go through under a detection zone carelessly if it exceeds 300mm (200mm for other purpose than industrial use) into risk assessment.

[Calculation example]
When Tm = 0.05s, Ts = 0.01s, and d = 14mm:
S = 1,600mm/s x (0.05s + 0.01s) + 1200 - 0.4 x 500mm
= 1096mm

When a warning zone is configured as in the figure, you must calculate L, a distance form an end of casing to a detection zone, using a formula below:

L = (Total number of F3SJ beams - number of warning zone beams - 1) x P + 10
•P: Beam Gap (mm)
F3SJ-A□□□□P14 . . . 9mm
F3SJ-A□□□□P20 . . . 15mm
F3SJ-A□□□□P25 . . . 20mm
F3SJ-A□□□□P30 . . . 25mm
F3SJ-A□□□□P55 . . . 50mm

For total number of F3SJ beams, see "Model Name List/Response Times p.17 ".

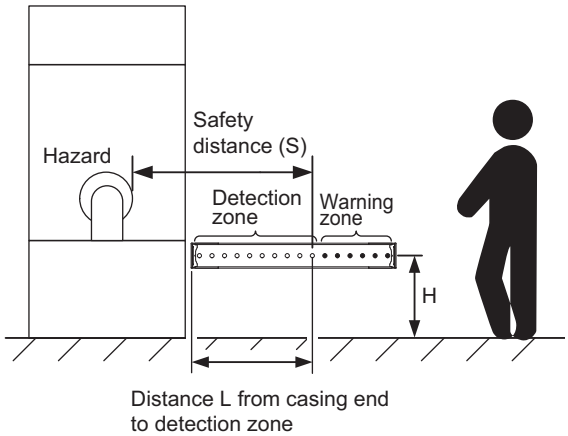

■ How to calculate the safety distance specified by American standard ANSI B11.19 (reference)

If a person approaches the detection zone of the F3SJ perpendicularly, calculate the safety distance as shown below.
S = K x (Ts + Tc + Tr + Tbm) + Dpf
•S: Safety distance
•K: Approach speed to the detection zone (the value recommended by OSHA standard is 1,600mm/s)

Approach speed K is not specified in the ANSI B.11.19 standard. To determine the value of K to apply, consider all factors, including the operator's physical ability.

•Ts = Machine's stopping time (s)

•Tr = Response time of the F3SJ from ON to OFF (s)

•Tc = Machine control circuit's maximum response time required to activate its brake (s)

•Tbm = Additional time (s)

If a machine has a brake monitor, "Tbm= Brake monitor setting time - (Ts + Tc)". If it has no brake monitor, we recommend using 20% or more of (Ts + Tc) as additional time.

•Dpf = Additional distance

According to ANSI's formula, Dpf is calculated as shown below:

Dpf = 3.4 x (d - 7.0): Where d is the detection capability of the F3SJ (unit: mm)

[Calculation example]

When K = 1,600mm/s, Ts + Tc = 0.06s, brake monitor setting time = 0.1s,

Tr = 0.01s, and d = 14mm:

Tbm = 0.1 - 0.06 = 0.04s

Dpf = 3.4 x (14 - 7.0) = 23.8mm

S = 1,600 x (0.06 + 0.01 + 0.04) + 23.8 = 199.8mm

Distance from Reflective Surfaces

⚠ WARNING

Install the sensor system so that it is not affected by reflective surfaces. Failure to do so may hinder detection, resulting in serious injury.

Install the sensor system at distance D or further from highly reflective surfaces such as metallic walls, floors, ceilings, or workpieces, as shown below.

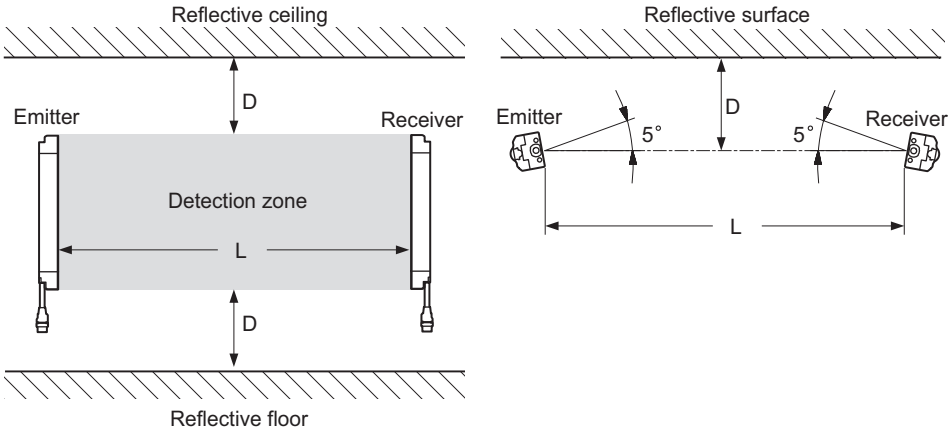

Distance between an emitter and a receiver (operating range L)	Allowable installation distance D
For 0.2 to 3m	0.13m
For 3m or more	L/2 x tan5 ° = L x 0.044 (m)

Mutual Interference Prevention

⚠ WARNING

Do not use the sensor system with mirrors in a retro-reflective configuration. Doing so may hinder detection. It is possible to use mirrors to "bend" the detection zone to a 90-degree angle.

When using more than 1 set of F3SJ, install them so that mutual interference does not occur, such as by configuring series connections or using physical barriers between adjacent sets.

■ Series Connection

Series connection can prevent mutual interference when multiple sensors are used. Up to 4 sets, 400 beams, can be connected. The emission of series-connected F3SJ is time-divided, so mutual interference does not occur and safety is ensured.

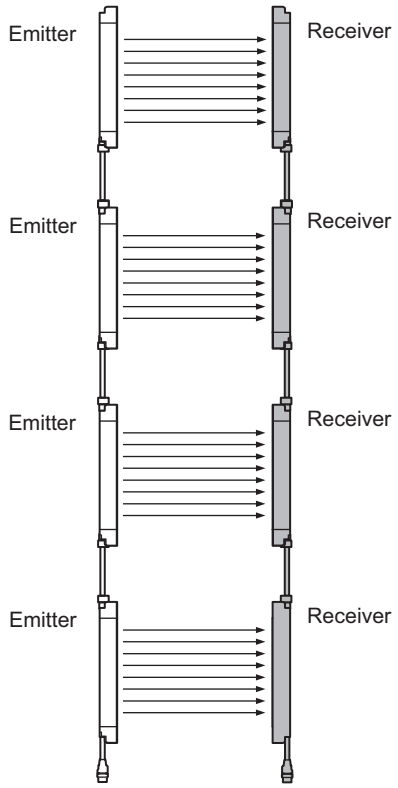

How to perform series connection p.120

■ No Connection

Mutual interference is prevented in up to 3 sets, using interference light avoidance algorithm. If 4 or more sets of F3SJ are installed and are not connected to each other, arrange them so that mutual interference does not occur. If 2 sets are installed near each other, reflection from the surface of the F3SJ may cause mutual interference. When mutual interference occurs, the safety outputs are turned OFF in a moment or the F3SJ enters lockout.
Combining countermeasures 1 to 4 shown below is effective.

1. Install a physical barrier between 2 sets

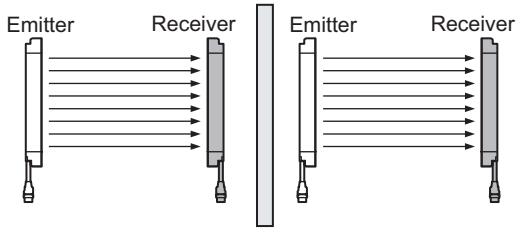

2. Alternate the direction of emission between 2 sets (alternation)

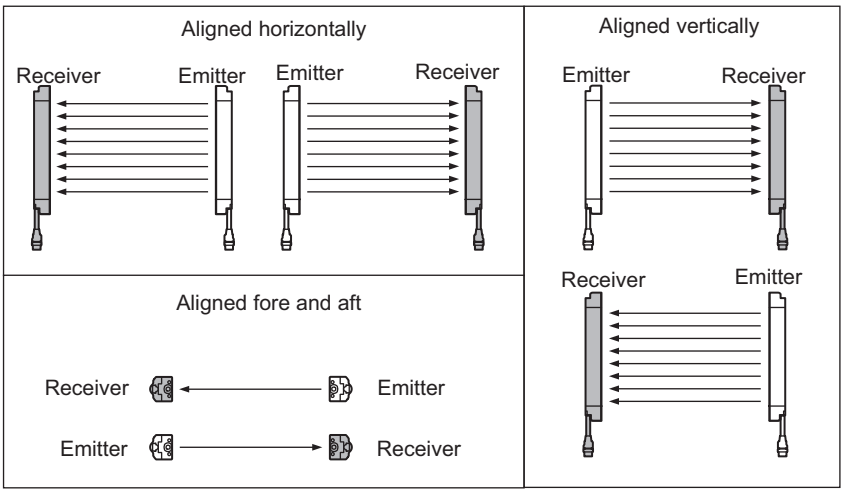

If 2 sets are installed near each other, reflection from the surfaces may cause mutual interference. For such a case, it can be improved by reducing operating range through the setting tool (see Step 3).

3. Reducing operating range (setting change by the setting tool is required)

< Before the change >

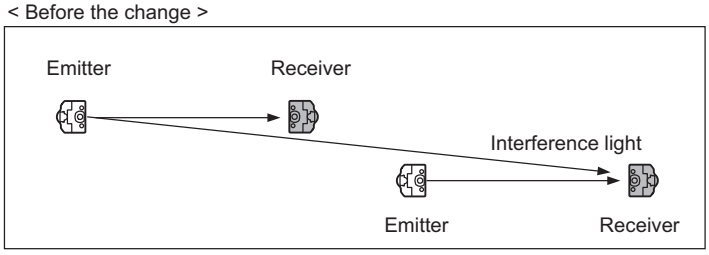

< After the change >

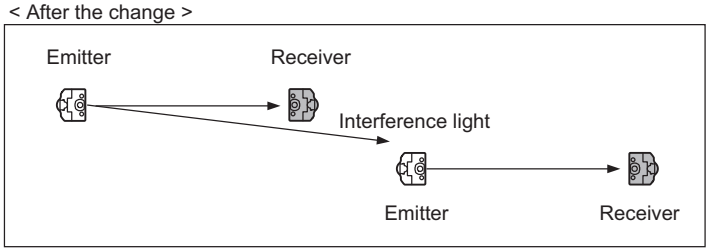

4. Keep sufficient distance between the F3SJs so that mutual interference does not occur

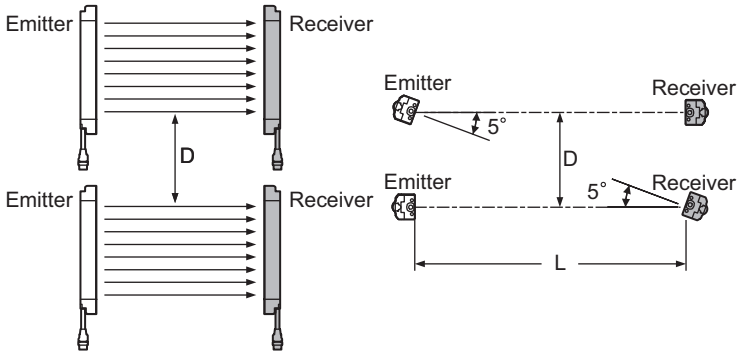

Distance between emitter and receiver (operating range L)	Allowable installation distance D
For 0.2 to 3m	0.26m
For 3m or more	L x tan5 ° = L x 0.088 (m)

When using 4 or more sets that are not series-connected, the installations shown below may cause mutual interference. When mutual interference occurs, the safety outputs are turned OFF in a moment or the F3SJ enters lockout.

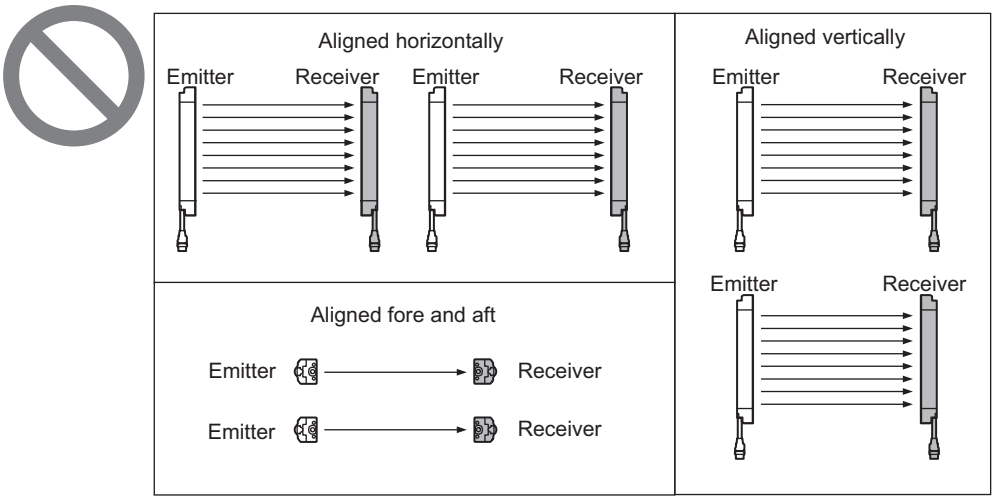

Series Connection

From 2 to 4 sets of F3SJ can be series-connected. Series connection allows them to be used as a a safety light curtain, requiring only 1 set to be wired to a controller and preventing mutual interference.
If any 1 set of series-connected F3SJ is blocked, both of the safety outputs turn OFF. The indication LED for each F3SJ turns ON separately.

- Number of connections: Up to 4 sets
- Total number of beams: Up to 400 beams
- Connection cable length between 2 F3SJ in series connection: 15m max.

Ex.: Configuring an L- or U-shaped detection zone

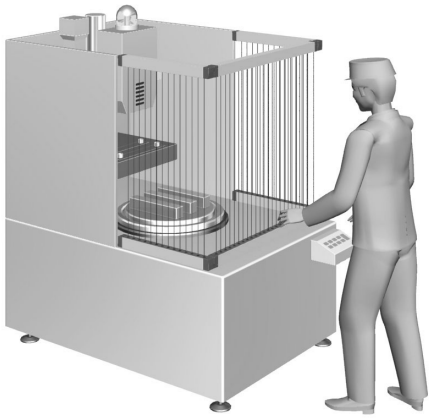

The terms used in this document to describe each F3SJ in a series connection are shown below.

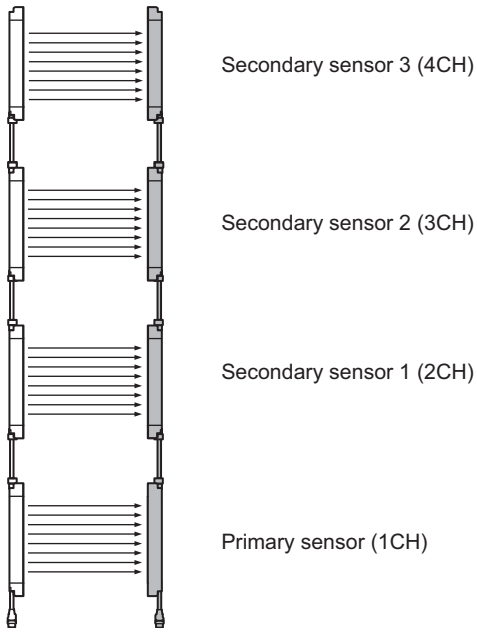

CHECK!

When attaching a cable or cap, tightly fasten the screws (M2, in 4 places, recommended torque: 0.15N• m). Failure to do so may cause the cable/cap to come loose, leading to deterioration of the protective functions.

Connect an emitter to another emitter, and a receiver to another receiver, as shown below.

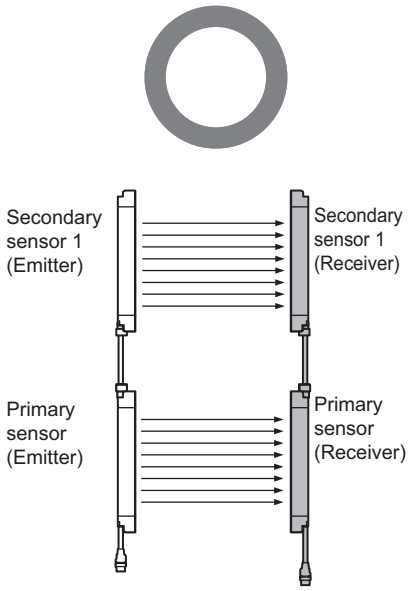

Do not series-connect an emitter and receiver. They will enter lockout state.

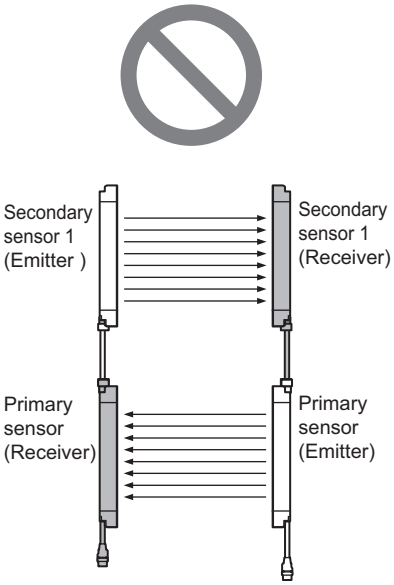

Do not face different models of emitters and receivers toward each other. They will enter lockout state or will be unable to detect objects.

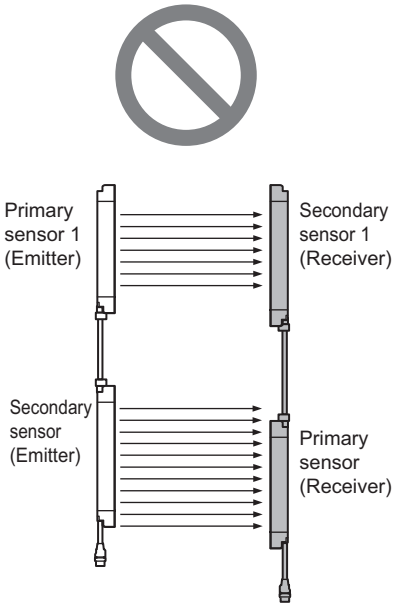

CHECK!

If caps and series connection cables are not connected properly, the F3SJ enters lockout (when power is turned ON).

Connection Procedure

■ When Using the F39-JJR□L Series Connection Cable for Close Contact (sold separately)

1. Remove the connection cable of the secondary-side F3SJ. (driver comes with F39-JJR□L)
2. Remove the cap from the secondary-side F3SJ.
3. Use the F39-JJR□L series connection cable for close contact to connect them.

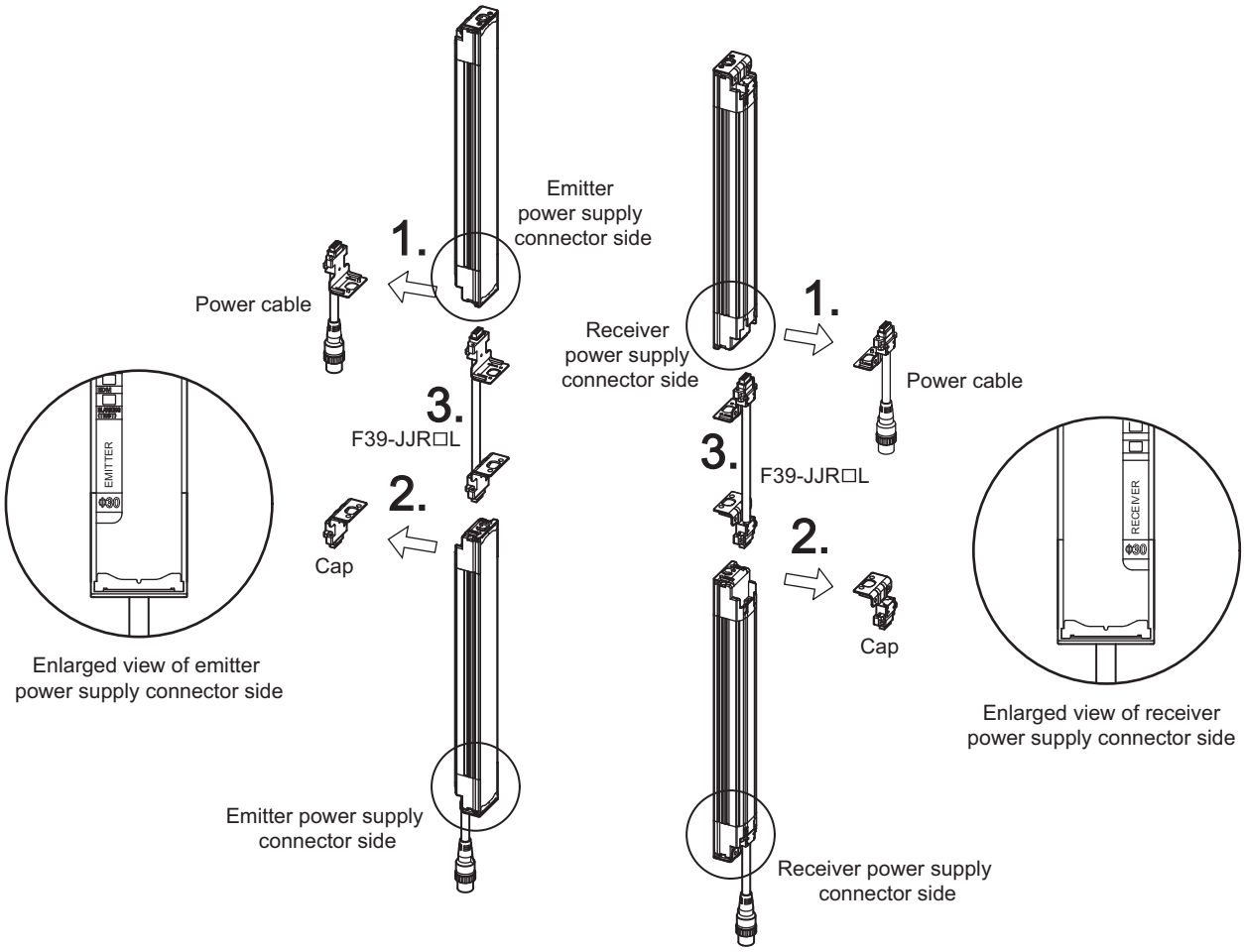

CHECK!

- Attaching/detaching of a cap or a series-connection cable may cause misalignment of rubber grommet in a connector assembly. Press the grommet to the bottom of the connector and attach the connector F3SJ again.

p.125

- Use the F39-JJR□L series connection cable for close contact when the connection distances between F3SJ are short for a L-shaped configuration, and use the F39-JJR3W (and F39-JD□B) series connection cable for extension when the connection distances are long.
  Ex.: L-shaped configuration

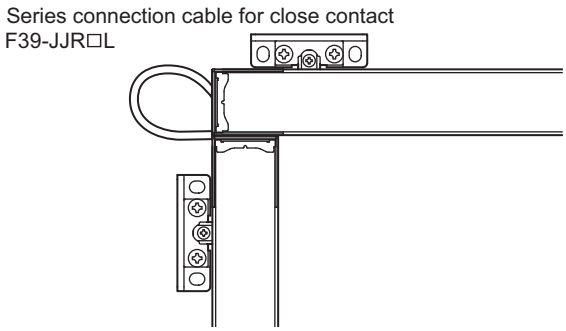

■ When Using the F39-JJR3W Series Connection Cable for Extension (sold separately)

1. Remove the caps from the primary sensor. (driver comes with key cap for muting)
2. Use the F39-JJR3W series connection cable for extension to connect them.
3. When changing the connection distance between the F3SJ, connect a double-ended cable F39-JD□B (optional).

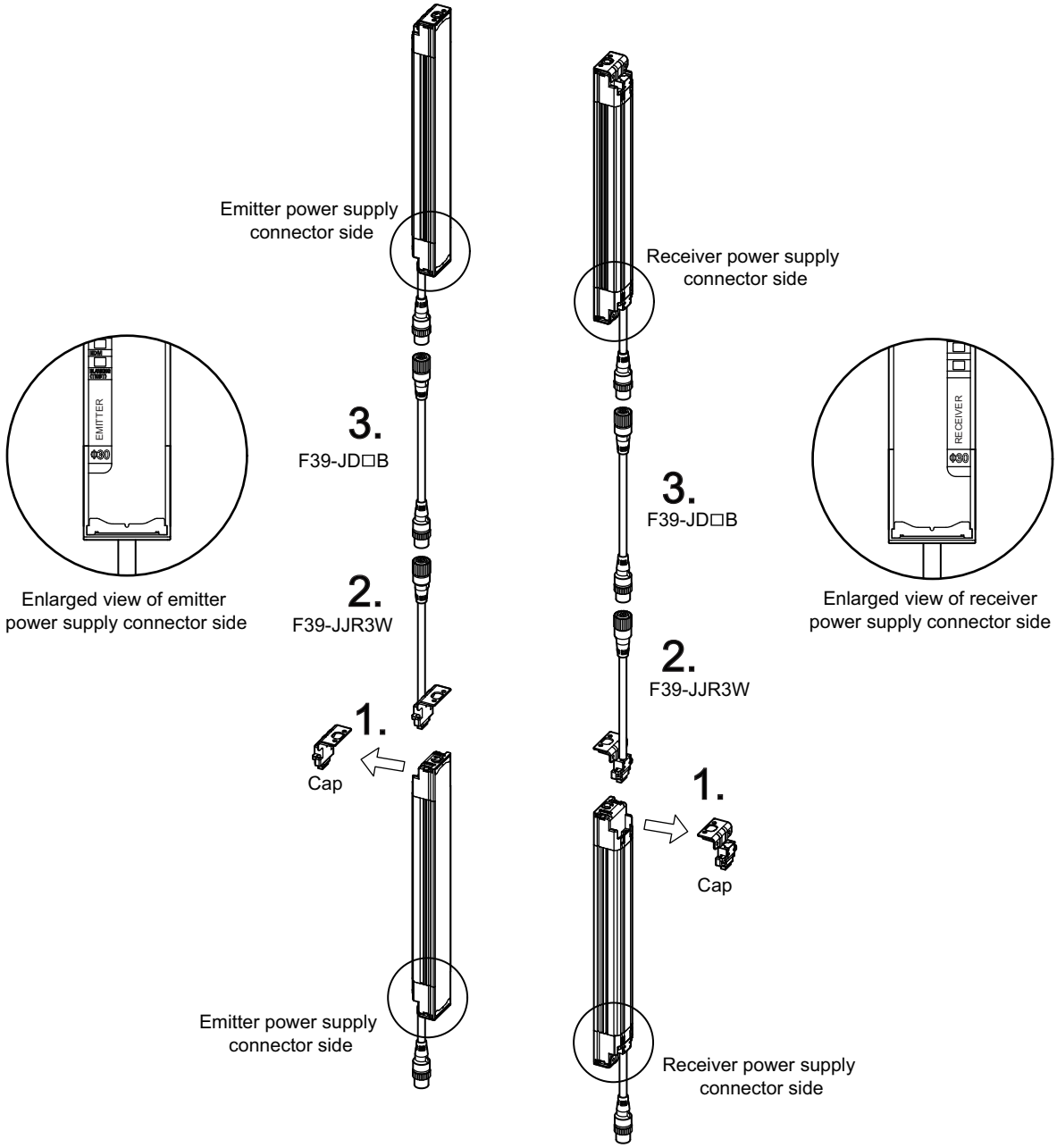

CHECK!

- When attaching a cable or a cap, tightly fasten the screws (M2, in 4 places, recommended torque: 0.15N• m). Failure to do so may cause the cable/cap to come loose, leading to deterioration of the protective functions.
- Attaching/detaching of a cap or a series-connection cable may cause misalignment of rubber grommet in a connector assembly.
  Press the grommet to the bottom of the connector and attach the connector F3SJ again.

p.125

Attaching External Indicators

An external indicator can be connected and turned ON based on the operation of the F3SJ. Indicators can be attached to emitters and/or receivers.

Example:

- Indicate that the F3SJ is in lockout
- Indicate that a machine is stopped (safety output is OFF)
- Indicate that the F3SJ is in muting or override

⚠ WARNING

Do not use the auxiliary output or external indicator output for safety applications.
Human body may not be detected when F3SJ fails, resulting in serious injury.

Connection Procedure

1. Remove the cap from the side (emitter or receiver) to which you want to attach the external indicator. (driver comes with F39-A01P□-PAC, F39-JJ3N)
2. Attach the external indicator.

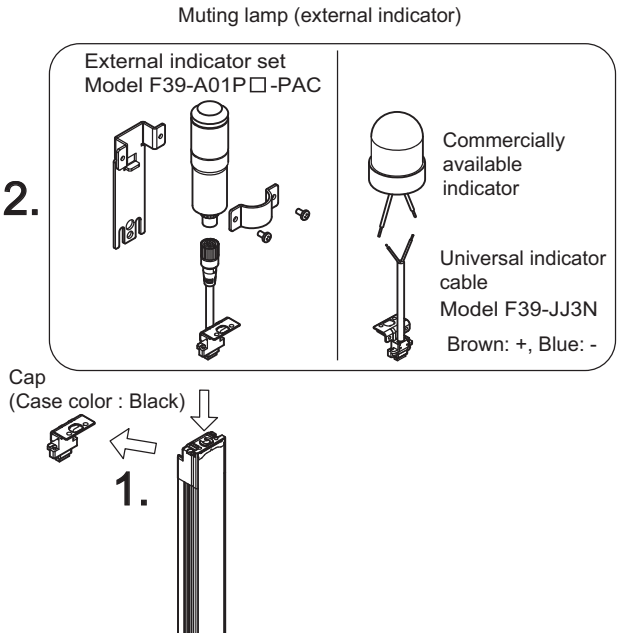

Recommended items

Name	Model name	Description
External indicator set	F39-A01P□-PAC	A set consisting of an LED indicator, connection cable, and mounting brackets. The LED indicator is available in red, green, or yellow.
Universal indicator cable	F39-JJ3N	Available external indicators - Incandescent lamp: 24VDC, 3 to 7W - LED lamp: Load current 300mA max.

CHECK!

- When attaching a cable or cap, tightly fasten the screws (M2, in 4 places, recommended torque: 0.15N• m). Failure to do so may cause the cable/cap to come loose, leading to deterioration of the protective functions.

- Attaching/detaching of a cap or a series-connection cable may cause misalignment of rubber grommet in a connector assembly.
  Press the grommet to the bottom of the connector and attach the connector F3SJ again.

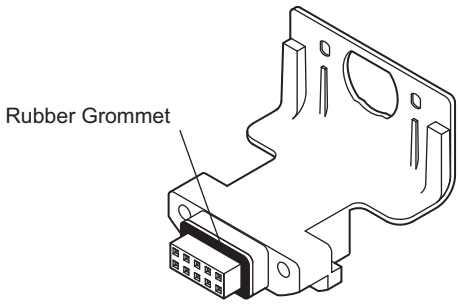

Rubber Grommet in Right Position

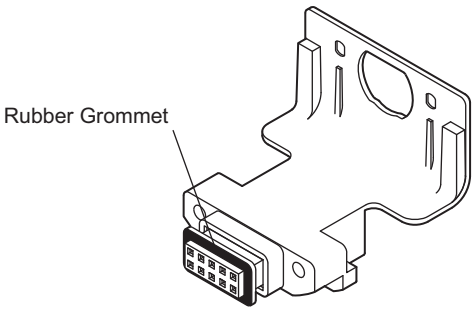

Misaligned Grommet

Output Operation

The external indicator output 1 (on the receiver side) is configured as "safety output reverse output (ON when blocked)", while the external indicator output 2 (on the emitter side) is configured as "lockout output (ON during lockout)".
When the muting function is used, both the emitter and receiver are configured as muting/override output (Blinking during muting and during override).

Timing chart of basic system

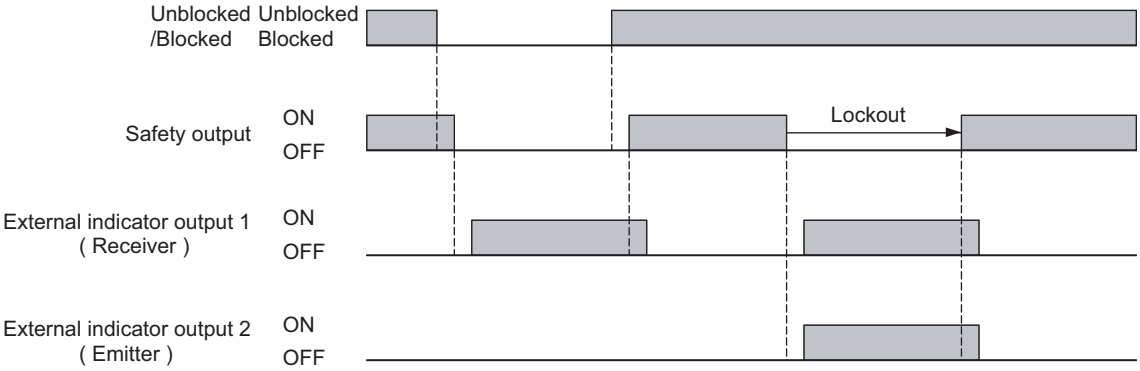

Setting Change by the Setting Tool

Functional setting is available through the setting tool.

External Indicator Output (Non-Safety Output) p.95

•Changing output operation mode
•Reversing output
•Changing indication mode of external indicator
•Enabling diagnosis function of external indicator

Dimensions

When Using Standard Mounting Brackets

■ Backside Mounting

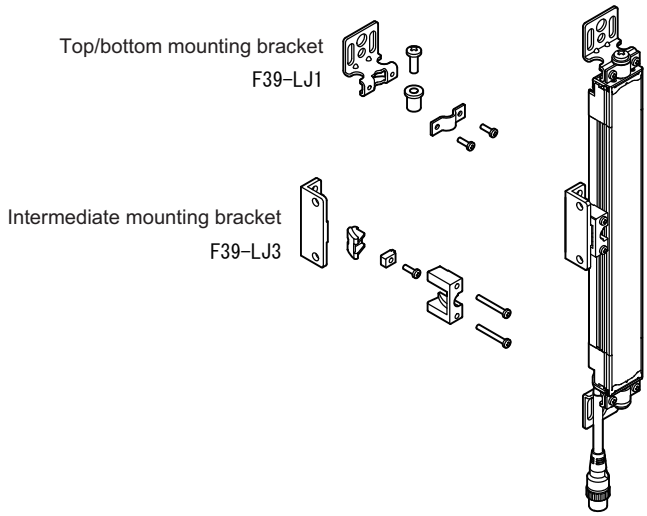

CHECK! The adjustment angle of F39-LJ3 is from -10deg to +10deg.

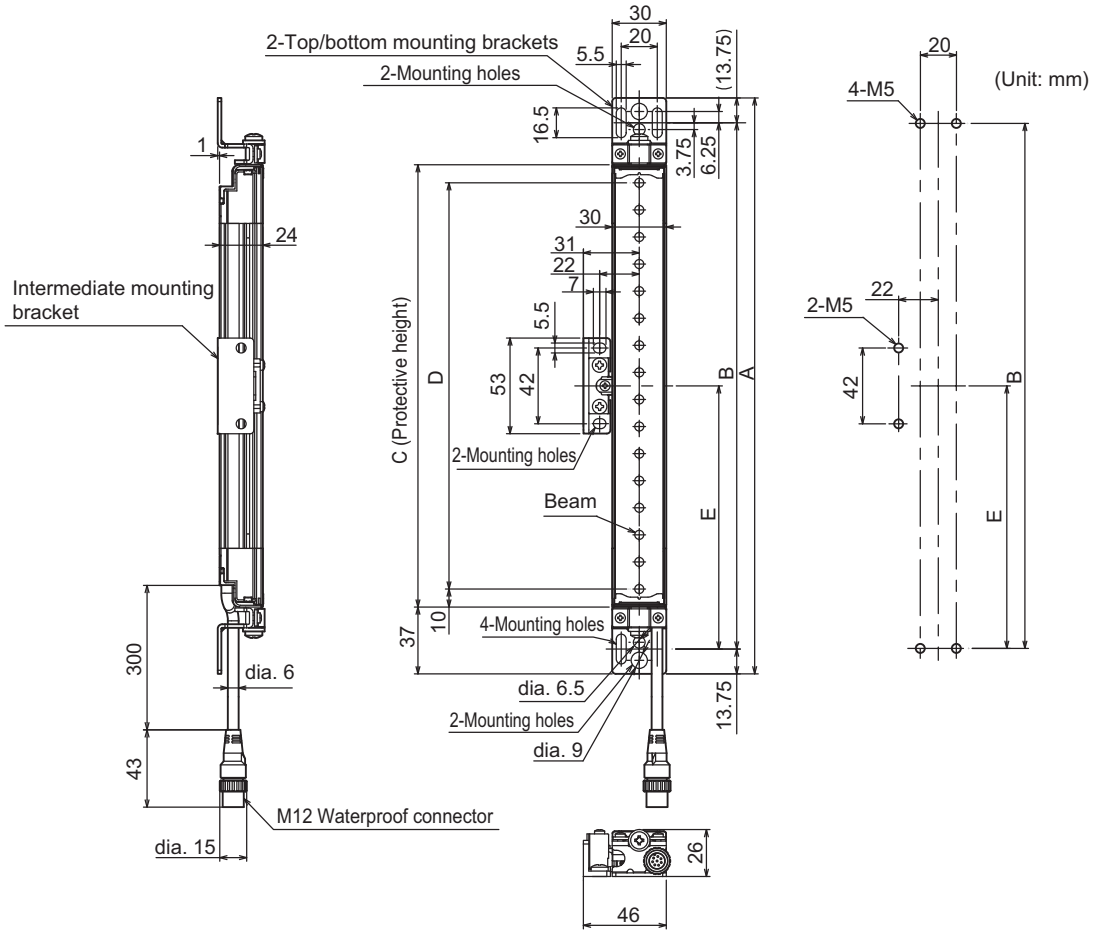

Bracket mounting procedure (Mounting) p.152

■ Side Mounting

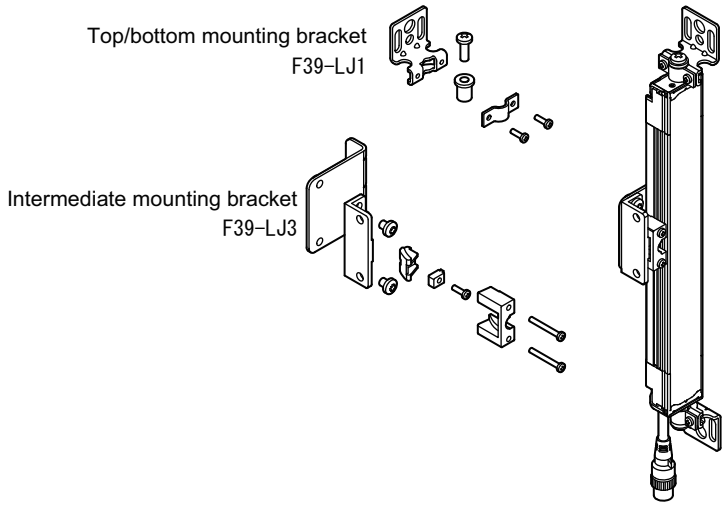

CHECK!

The adjustment angle of F39-LJ3 is from -10deg to +10deg.

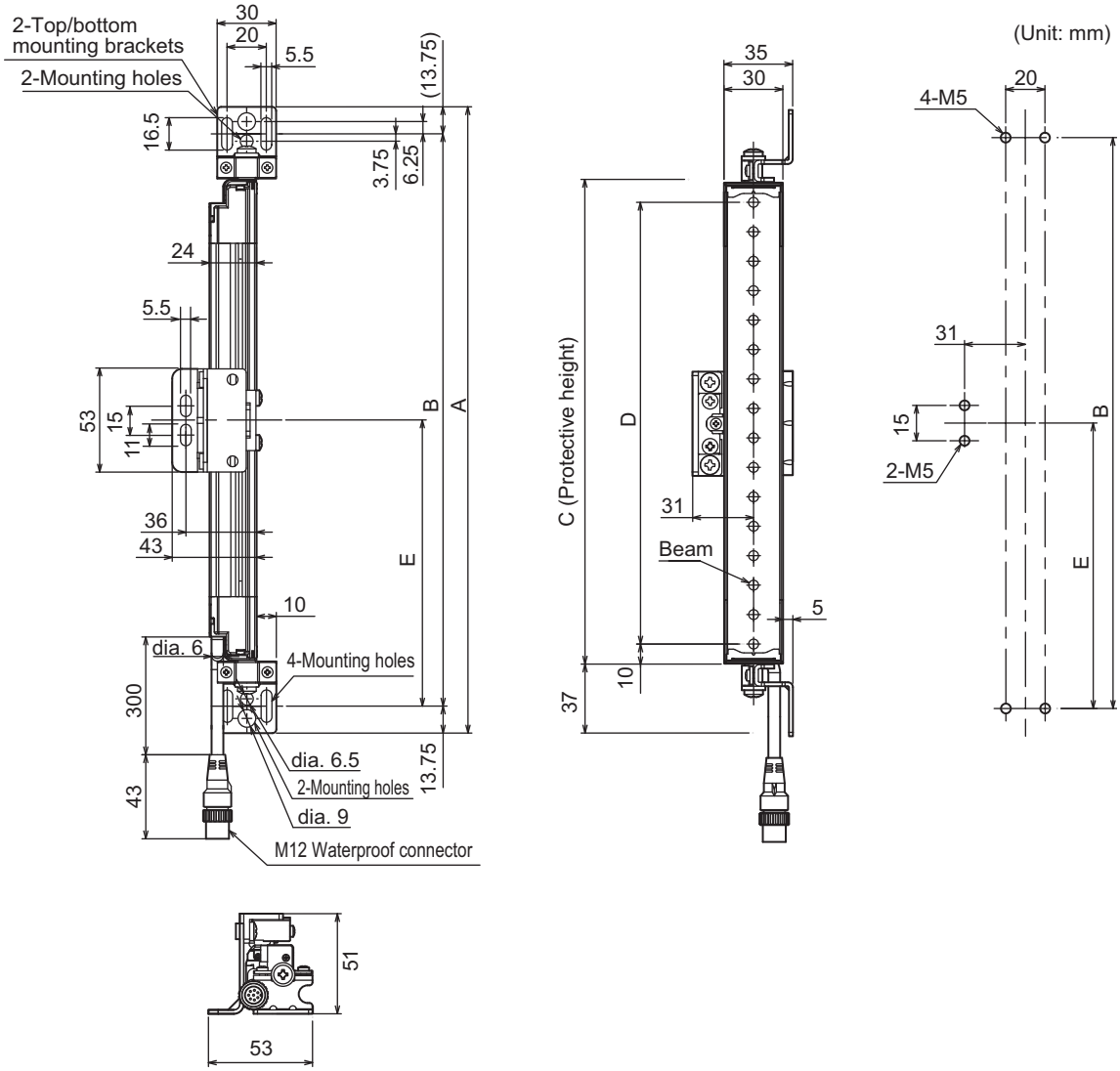

Bracket mounting procedure (Mounting) p.152

Dimensions A to E

A	C + 74
B	C + 46.5
C	4-digit number of the model name (protective height)
D	C - 20
E	Depends on the protective height. See the table below.

Dimension E

Protective height	Number of intermediate mounting brackets	E*1
0245 to 0596	0	-
0600 to 1130	1	B/2
1136 to 1658	2	B/3
1660 to 2180	3	B/4
2195 to 2500	4	B/5

*1. Use E = 530 or less when none of the E values shown above are used.

■ Dimensions of Standard Brackets (top/bottom mounting brackets)

(Unit: mm)

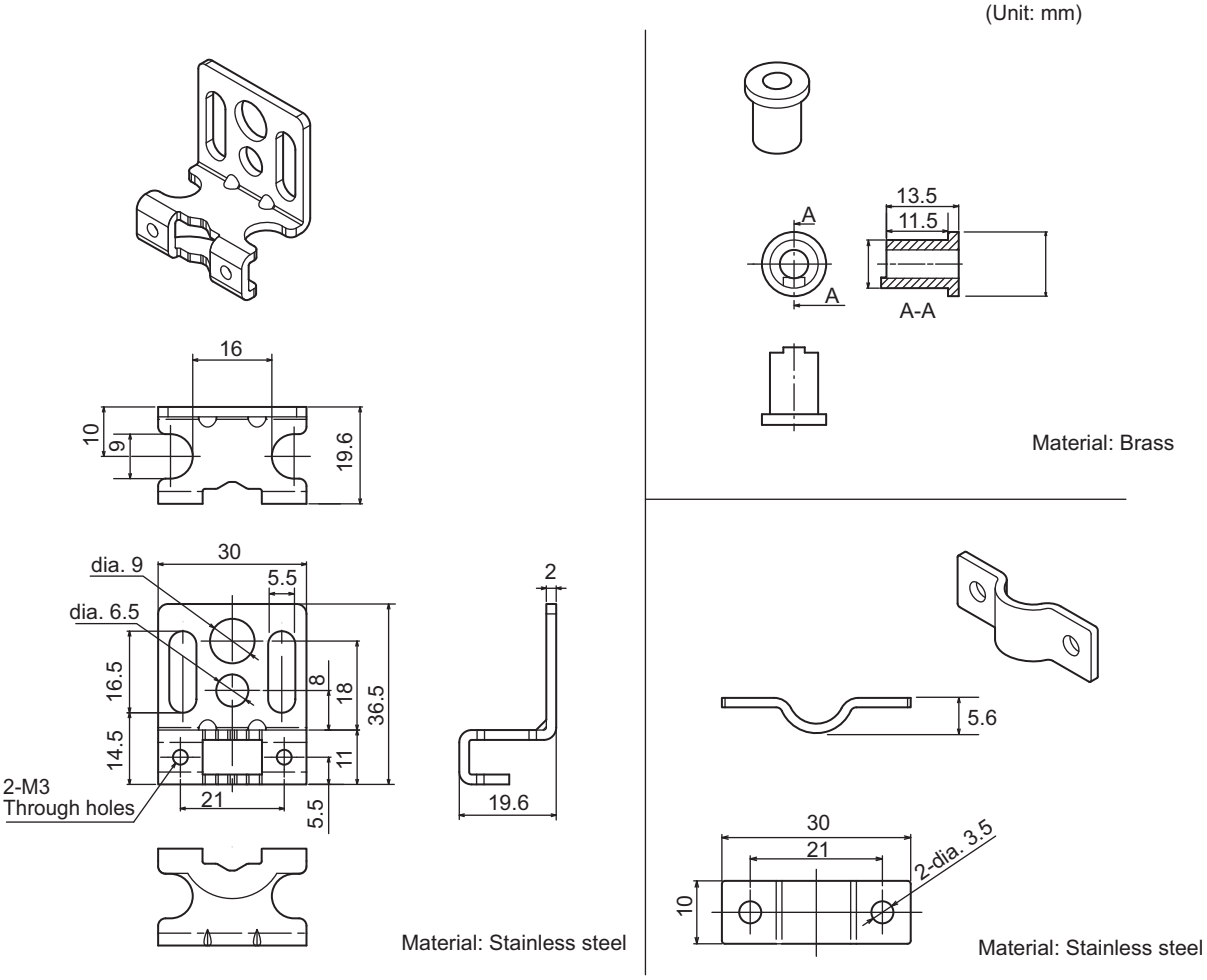

When Using Optional Mounting Brackets

■ F39-LJ2 Side-mounting Optional Bracket

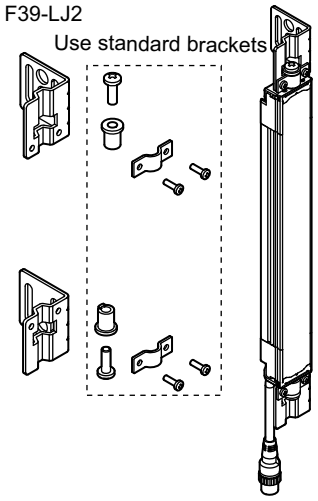

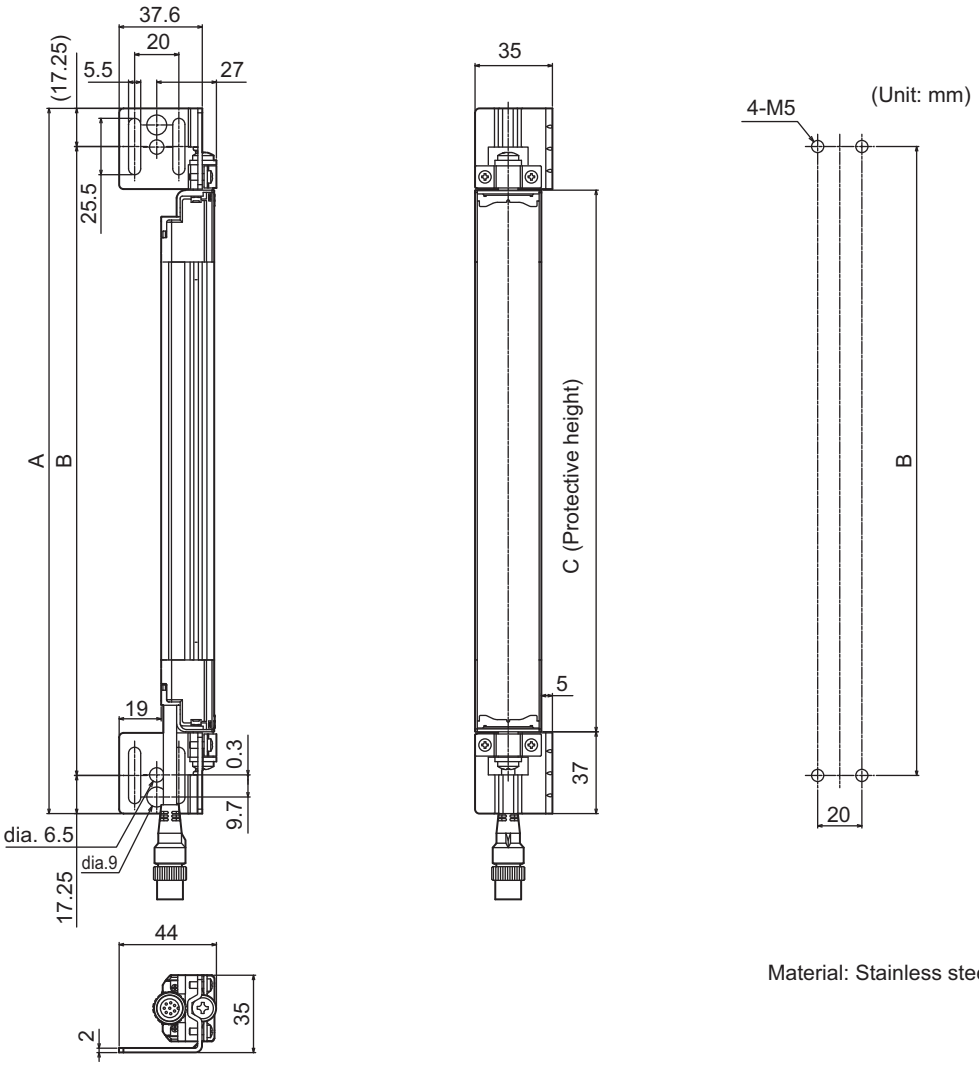

Material: Stainless steel

Dimensions A to C

A	C + 74
B	C + 39.5
C	4-digit number of the model name (protective height)

■ F39-LJ3 Free-location Mounting Bracket

Backside mounting

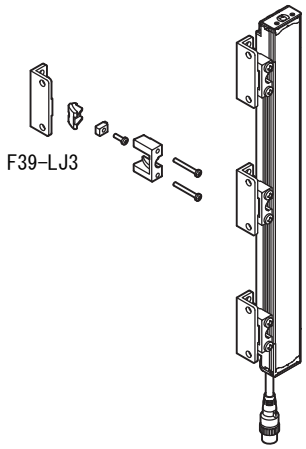

CHECK!

The adjustment angle of F39-LJ3 is from -10deg to +10deg.

(Unit: mm)

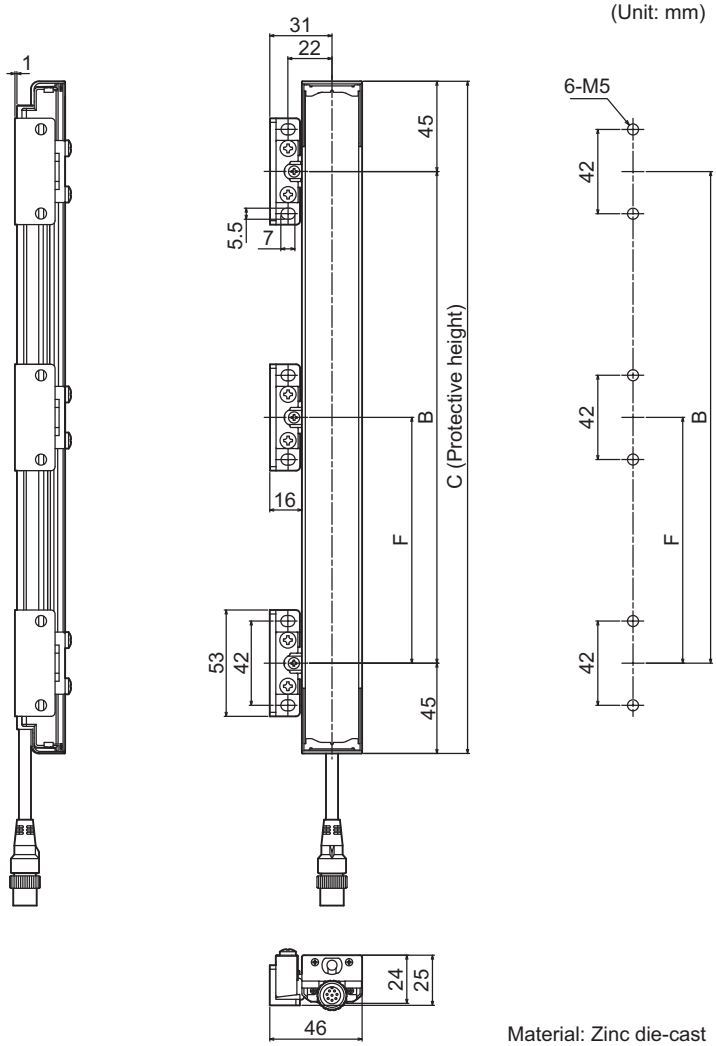

Material: Zinc die-cast

Side mounting (when using intermediate brackets for side mounting)

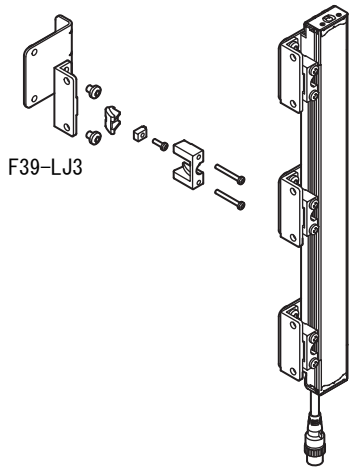

CHECK!

The adjustment angle of F39-LJ3 is from -10deg to +10deg.

(Unit: mm)

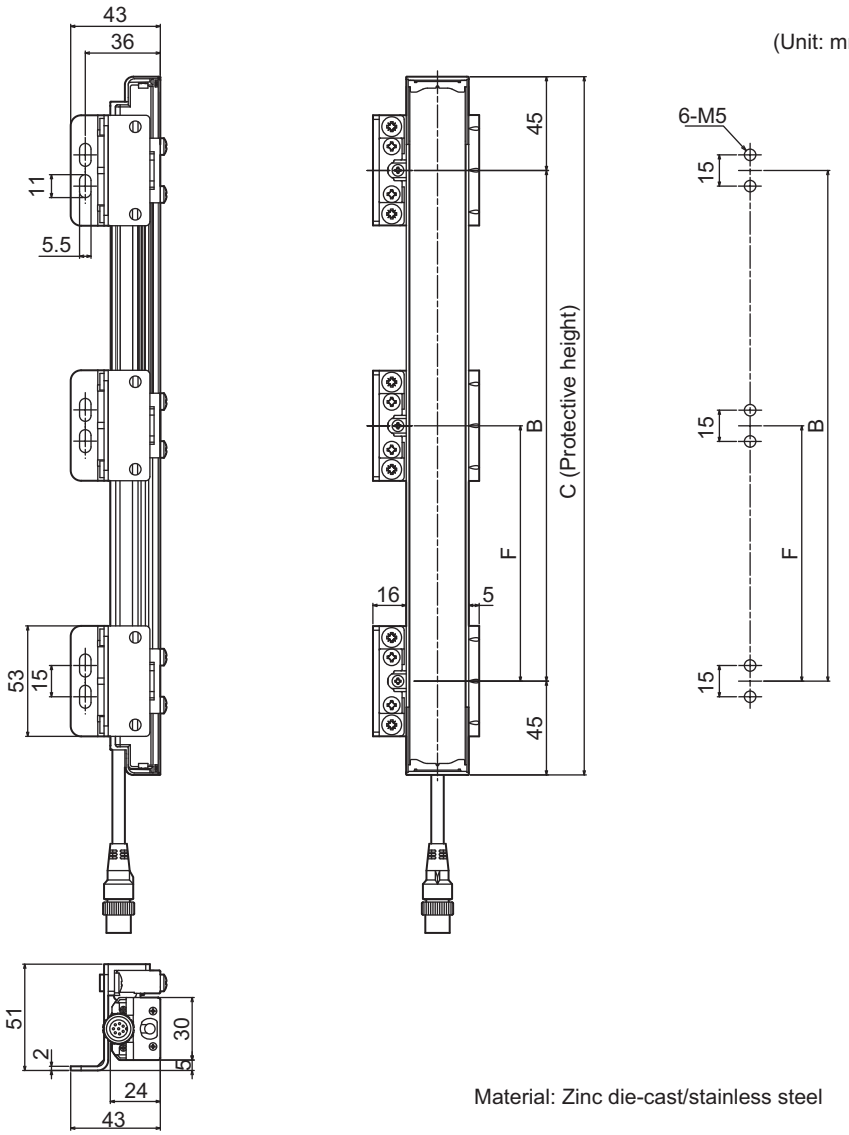

Material: Zinc die-cast/stainless steel

Side mounting (when not using intermediate brackets for side mounting)

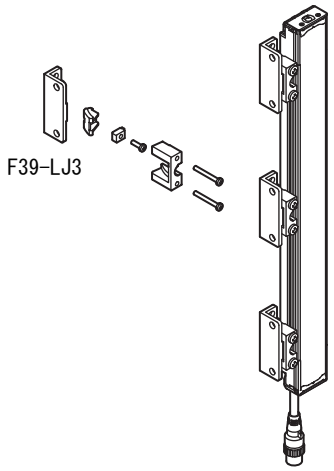

CHECK!

The adjustment angle of F39-LJ3 is from -10deg to +10deg.

(Unit: mm)

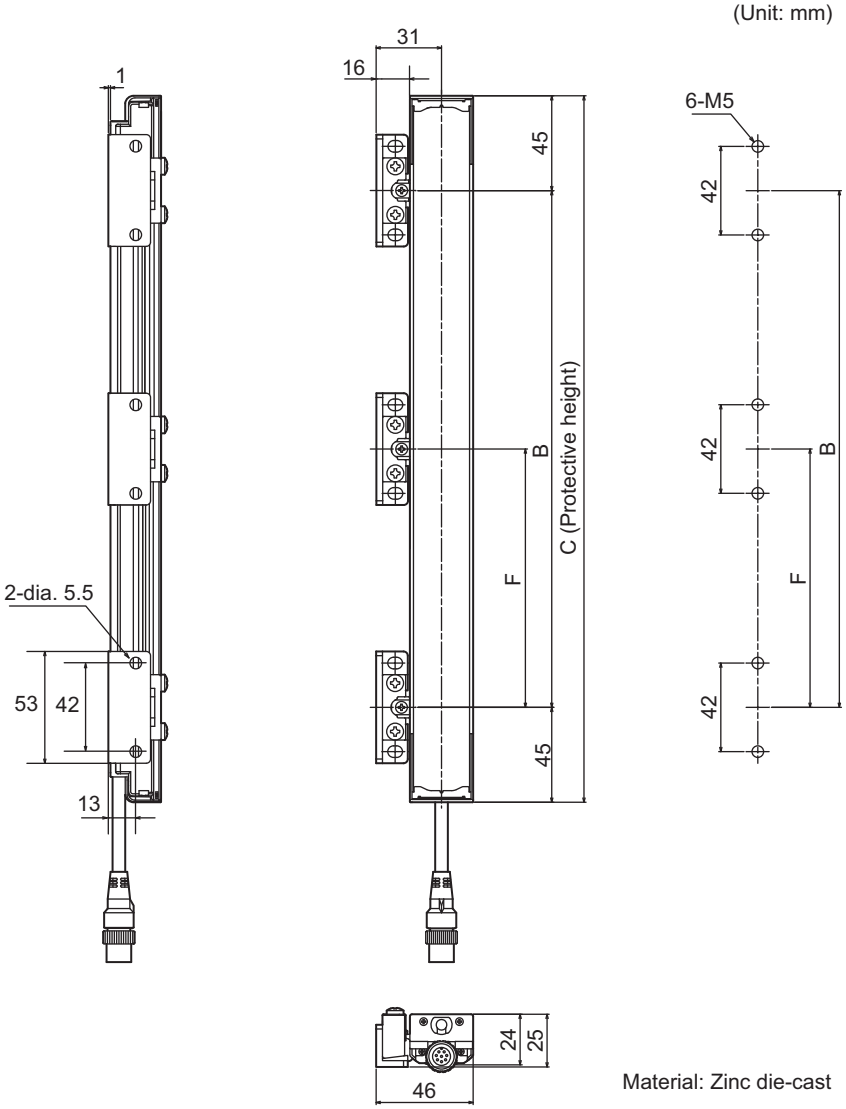

Material: Zinc die-cast

CHECK!

When performing side mounting without using intermediate brackets for side mounting, F39-LJ3 brackets cannot be used in combination with standard brackets.

Dimensions B, C, and F

B	C - 90
C	4-digit number of the model name (protective height)
F	Depends on the protective height. See the table below.

Dimension F

Protective height	Number of intermediate mounting brackets	F*1
245 to 440	2	-
443 to 785	3	B/2
794 to 1140	4	B/3
1145 to 1490	5	B/4
1495 to 1840	6	B/5
1845 to 2180	7	B/6
2195 to 2500	8	B/7

*1. Use F = 350 or less when none of the F values shown above are used.

When only F39-LJ3 free-location mounting brackets are used without standard brackets, allow a space of at least 350mm between the brackets. The number of brackets required varies according to the protective height. For details about the number of required brackets, refer to the table below.
The intermediate mounting brackets shipped with the product are the same as the F39-LJ3 free-location mounting brackets. Purchase brackets as necessary if there are fewer intermediate mounting brackets than required. When intermediate mounting brackets are included, they can be used as free-location mounting brackets.

Required number of F39-LJ3 free-location mounting brackets (2 pieces are included with F39-LJ3) for 1 F3SJ set (emitter/receiver)

Protective height	Number of free-location mounting brackets included as intermediate mounting brackets	Number of free-location mounting brackets required for mounting F3SJ	Number of additional free-location mounting bracket sets (number of brackets) that need to be purchased
245 to 440	0	4	2 sets (4)
443 to 596	0	6	3 sets (6)
600 to 785	2	6	2 sets (4)
794 to 1130	2	8	3 sets (6)
1136 to 1140	4	8	2 sets (4)
1145 to 1490	4	10	3 sets (6)
1495 to 1658	4	12	4 sets (8)
1660 to 1840	6	12	3 sets (6)
1845 to 2180	6	14	4 sets (8)
2195 to 2500	8	16	4 sets (8)

■ F39-LJ4 Top/bottom Mounting Bracket B

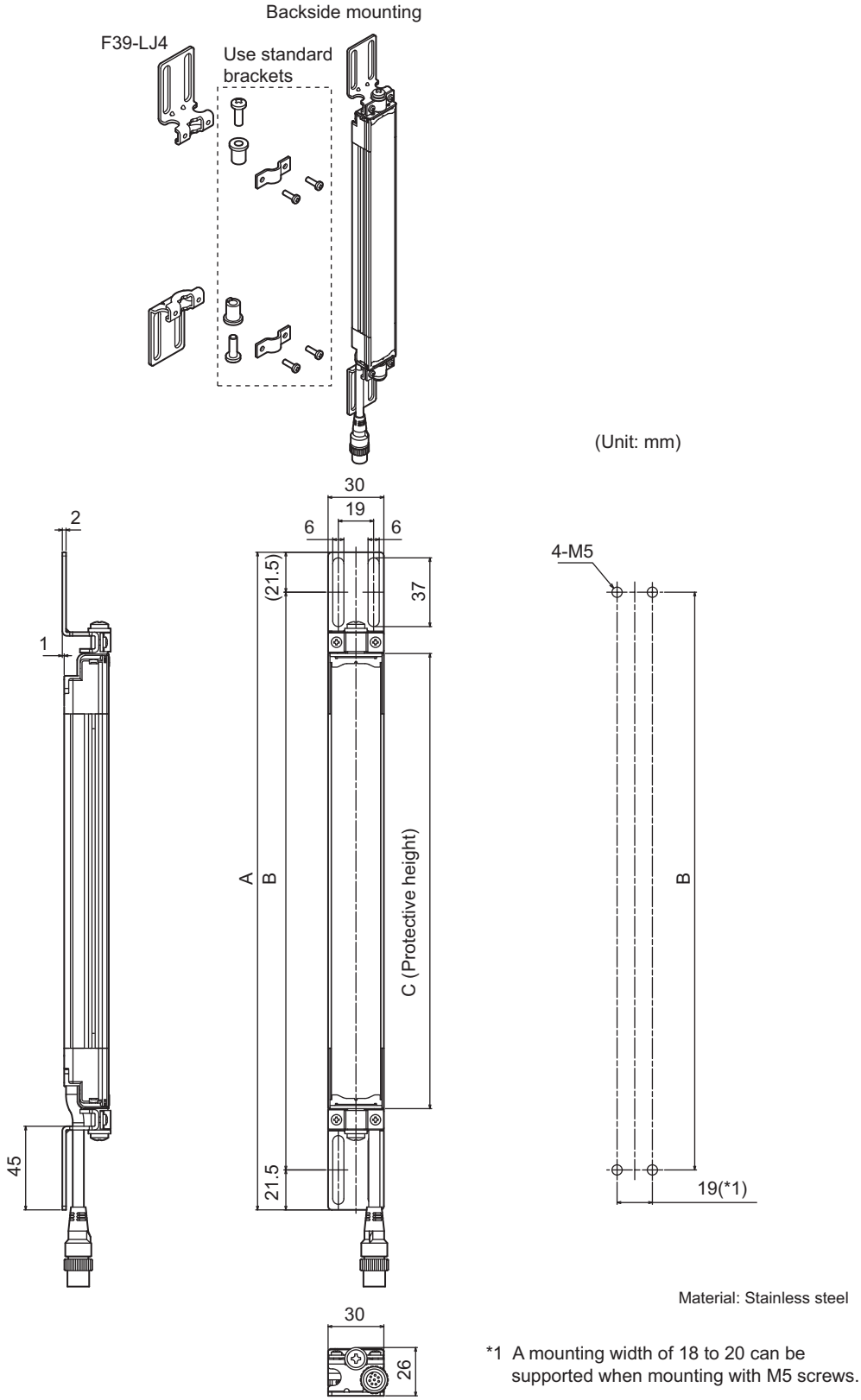

Material: Stainless steel

*1 A mounting width of 18 to 20 can be supported when mounting with M5 screws.

Dimensions A to C

A	C + 109
B	C + 66
C	4-digit number of the model name (protective height)

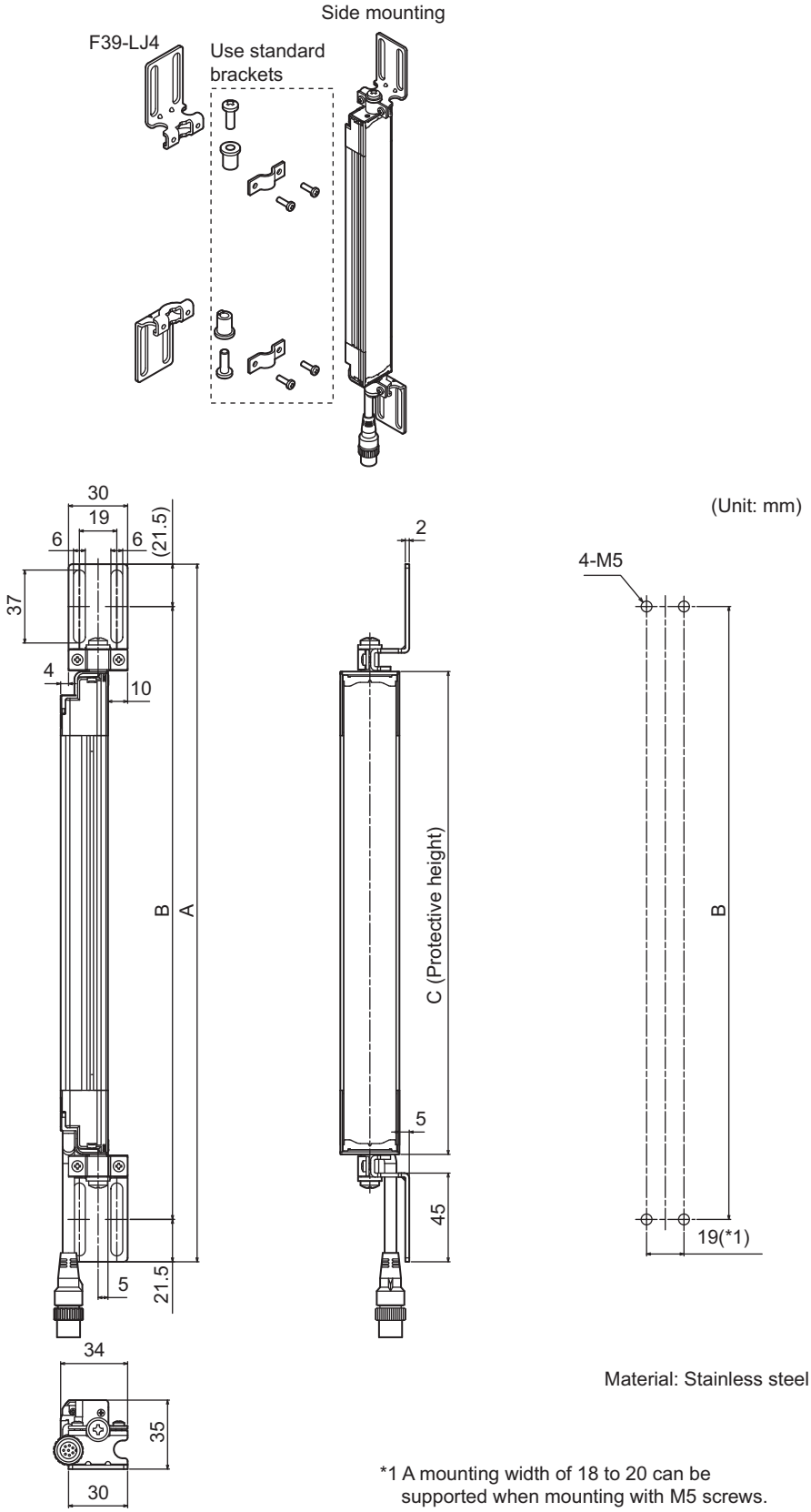

Dimensions A to C

A	C + 109
B	C + 66
C	4-digit number of the model name (protective height)

■ F39-LJ5 Replacement Bracket for F3SN

Use these replacement brackets for an F3SN with a small protective height.
(These brackets are designed for use with the F3SN's mounting holes.)

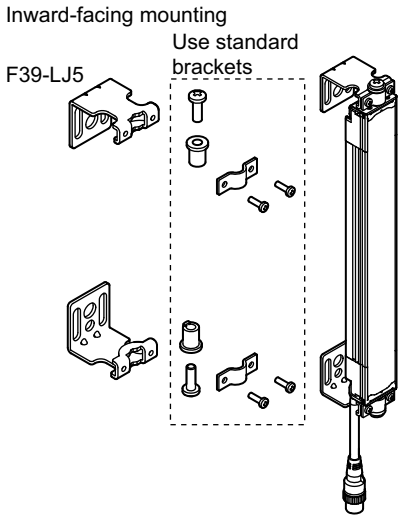

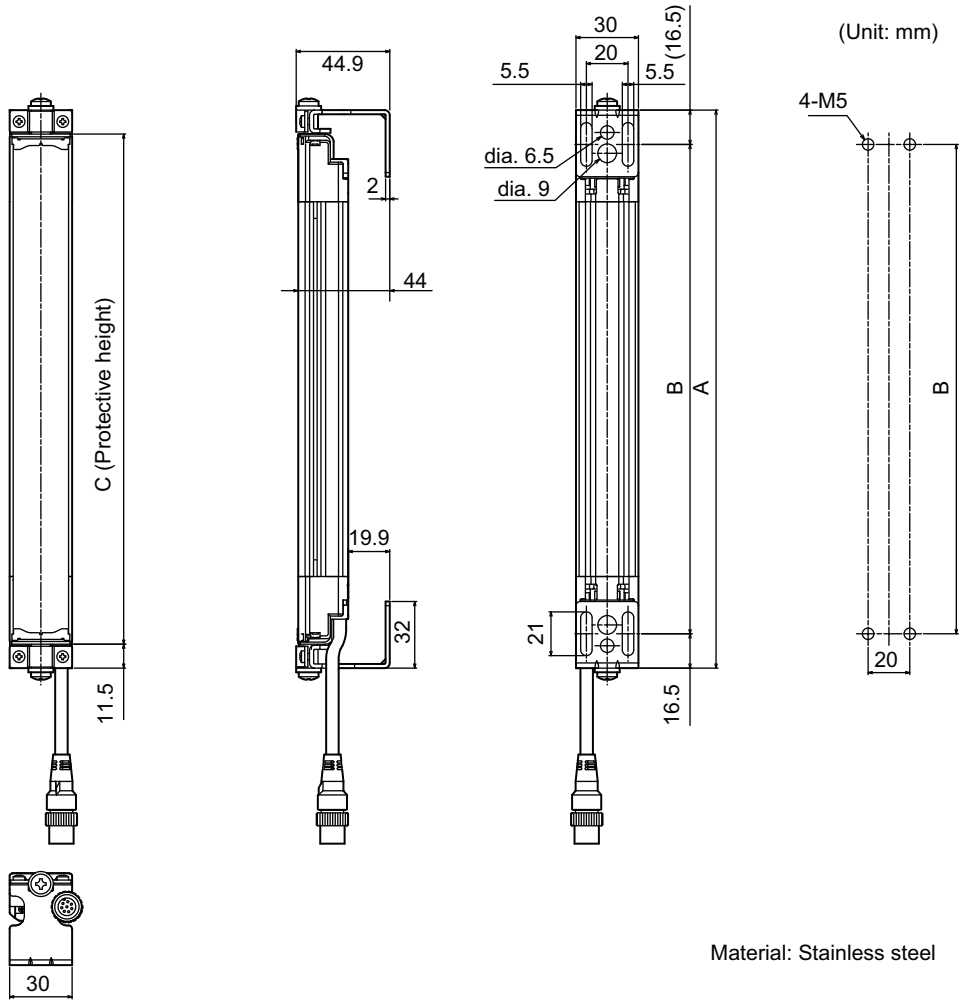

Dimensions A to C

A	C + 23
B	C - 10
C	4-digit number of the model name (protective height)

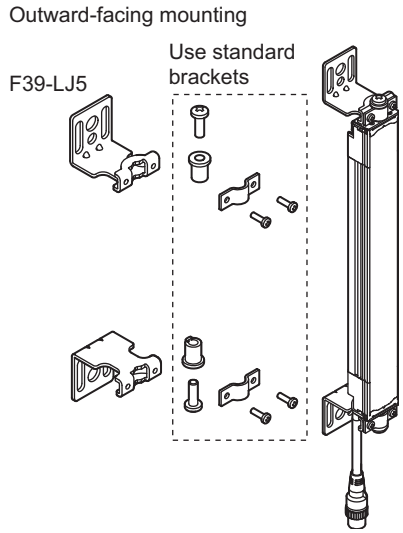

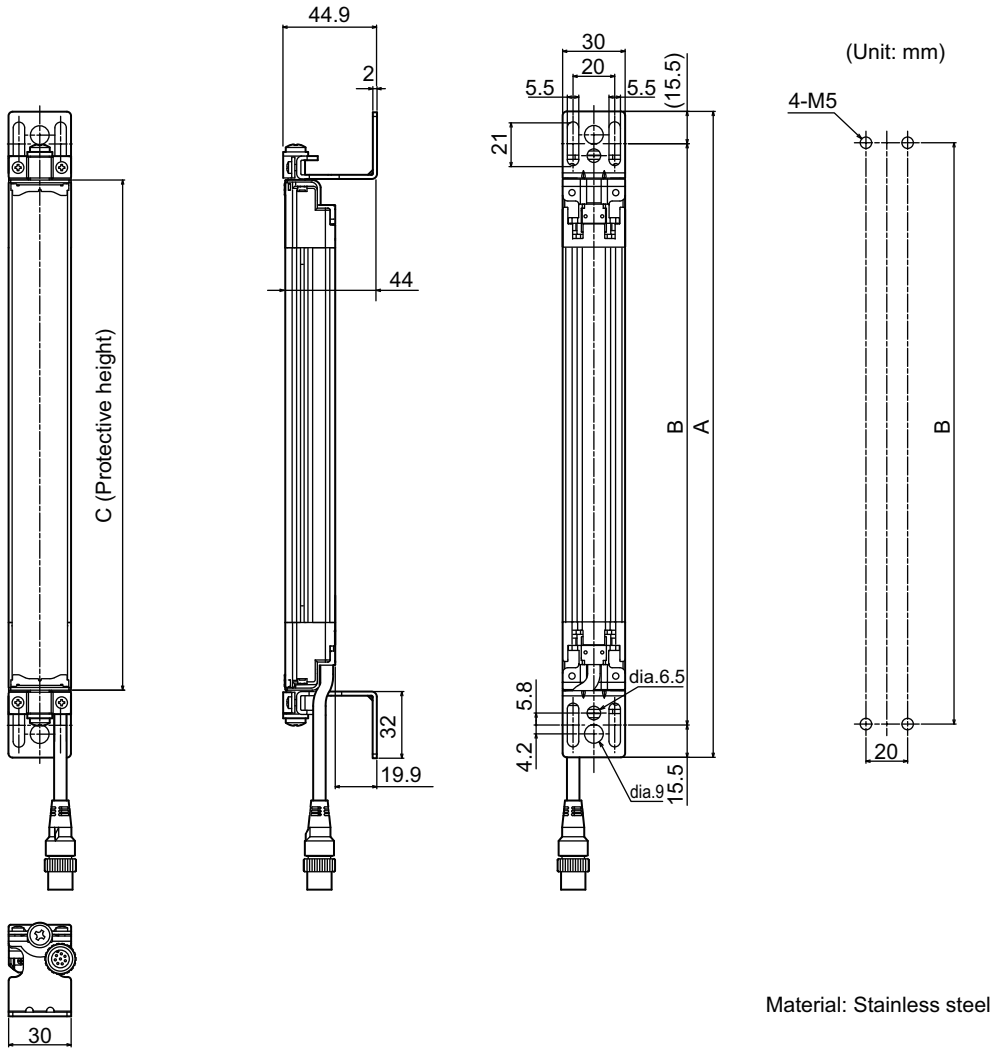

Material: Stainless steel

Dimensions A to C

A	C + 65
B	C + 34
C	4-digit number of the model name (protective height)

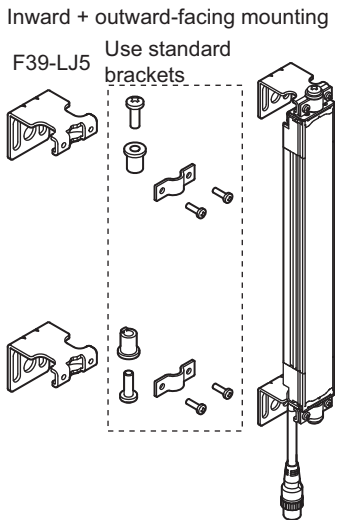

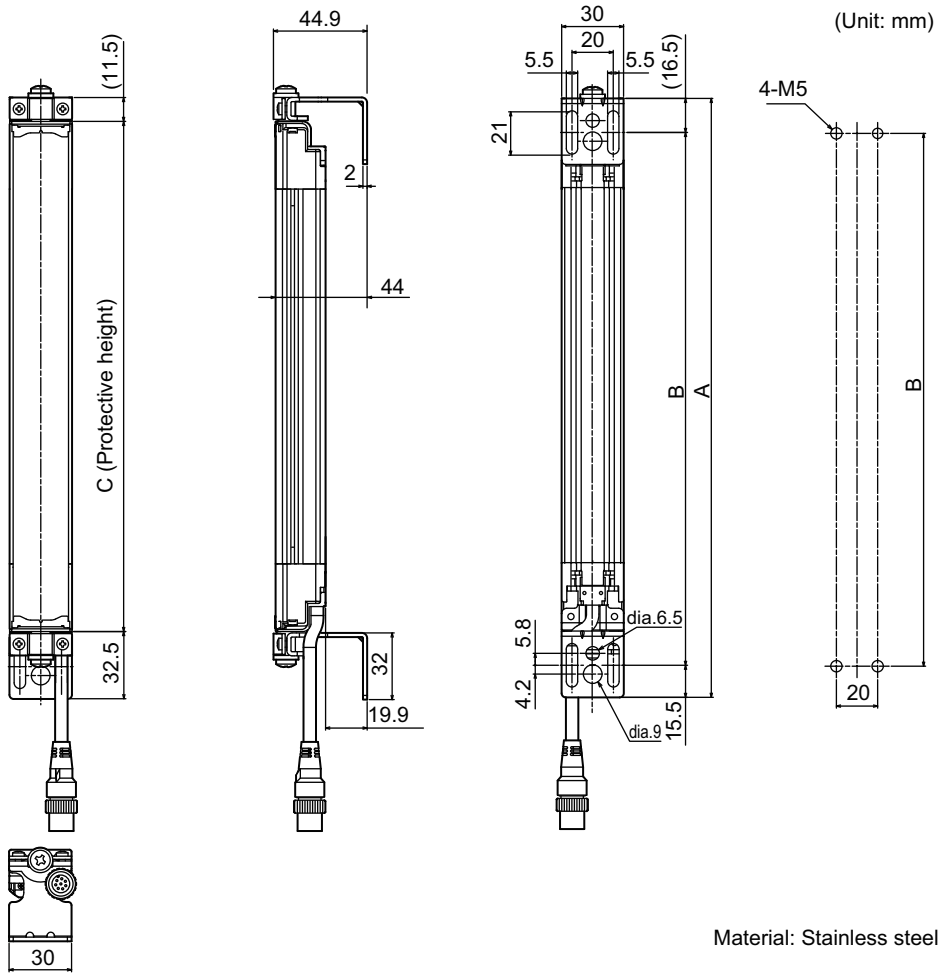

Material: Stainless steel

Dimensions A to C

A	C + 44
B	C + 12
C	4-digit number of the model name (protective height)

F3SN replacement correspondence table (F3SN mounting holes can be used without modification)

•When replacing F3SN-□□□□□P14 with F3SJ-A□□□□P14

F3SN		Replacement F3SJ		Replacement method using F39-LJ5
Model name	Protective height	Model name	Protective height	
F3SN-□0153P14	153	-	-	-
F3SN-□0180P14	180	F3SJ-A0245P14	245	Inward-facing mounting
F3SN-□0189P14	189	F3SJ-A0245P14	245	Inward-facing mounting
F3SN-□0198P14	198	F3SJ-A0245P14	245	Inward + outward-facing mounting
F3SN-□0207P14	207	F3SJ-A0245P14	245	Inward + outward-facing mounting
F3SN-□0216P14	216	F3SJ-A0245P14	245	Outward-facing mounting
F3SN-□0225P14	225	F3SJ-A0245P14	245	Outward-facing mounting

For lengths greater than the F3SN-□0234P14:

Add 11 to the F3SN's 4-digit number and apply it as the F3SJ's 4-digit number, and then replace with the standard brackets included with the product.

[Selection example] F3SN-A0315P14 becomes F3SJ-A0326P14 (replace with standard brackets)

CHECK!

- The protective height is 11mm longer.
- Replace with outward-facing mounting of F39-LJ5 when you want to set the detection surface height to be same as the F3SN.

However, the F39-LJ5 and intermediate mounting brackets cannot be mounted simultaneously, so set the protective height to 600mm or less.

•When replacing F3SN-□□□□□P25 with F3SJ-A□□□□P20

F3SN		Replacement F3SJ		Replacement method using F39-LJ5
Model name	Protective height	Model name	Protective height	
F3SN-□0187P25	187	-	-	-
F3SN-□0217P25	217	F3SJ-A0260P20	260	Inward-facing mounting
F3SN-□0232P25	232	F3SJ-A0260P20	260	Inward + outward-facing mounting
F3SN-□0247P25	247	F3SJ-A0245P20	245	Outward-facing mounting

For lengths greater than the F3SN-□0262P25:

Subtract 17 from the F3SN's 4-digit number and apply it as the F3SJ's 4-digit number, and then replace with the standard brackets included with the product.

[Selection example] F3SJ-A0322P25 becomes F3SJ-A0305P20 (replace with standard brackets)

CHECK!

- The protective height becomes 17mm shorter.
- Replace with outward-facing mounting of F39-LJ5 when you want to set the detection surface height to be same as the F3SN.

However, the F39-LJ5 and intermediate mounting brackets cannot be mounted simultaneously, so set the protective height to 600mm or less.

•When replacing F3SN-□□□□□P25 with F3SJ-A□□□□P25

F3SN		Replacement F3SJ		Replacement method using F39-LJ5
Model name	Protective height	Model name	Protective height	
F3SN-□0187P25	187	-	-	-
F3SN-□0217P25	217	F3SJ-A0260P25	260	Inward-facing mounting
F3SN-□0232P25	232	F3SJ-A0260P25	260	Inward + outward-facing mounting
F3SN-□0247P25	247	F3SJ-A0260P25	260	Inward + outward-facing mounting
F3SN-□0262P25	262	F3SJ-A0260P25	260	Outward-facing mounting

For lengths greater than the F3SN-□0277P25:
Subtract a number, ranging from 7 to 22, from the F3SN's 4-digit number and apply it as the F3SJ's 4-digit number, and then replace with the standard brackets included with the product.
[Selection example] F3SN-A0322P25 becomes F3SJ-A0300P25 (replace with standard brackets)

The formula shown above is recommended for mounting in the center of a mounting hole. If a mounting position is unmatched, another mounting hole must be drilled.

CHECK!

- The protective height becomes shorter by 7 to 22mm.
- Replace with outward-facing mounting of F39-LJ5 when you want to set the detection surface height to be same as the F3SN.
However, the F39-LJ5 and intermediate mounting brackets cannot be mounted simultaneously, so set the protective height to 600mm or less.

■ F39-LJ8 Space-saving Mounting Bracket

Brackets that can save mounting space for top and bottom

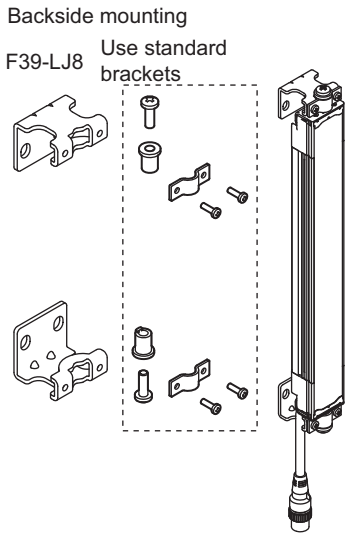

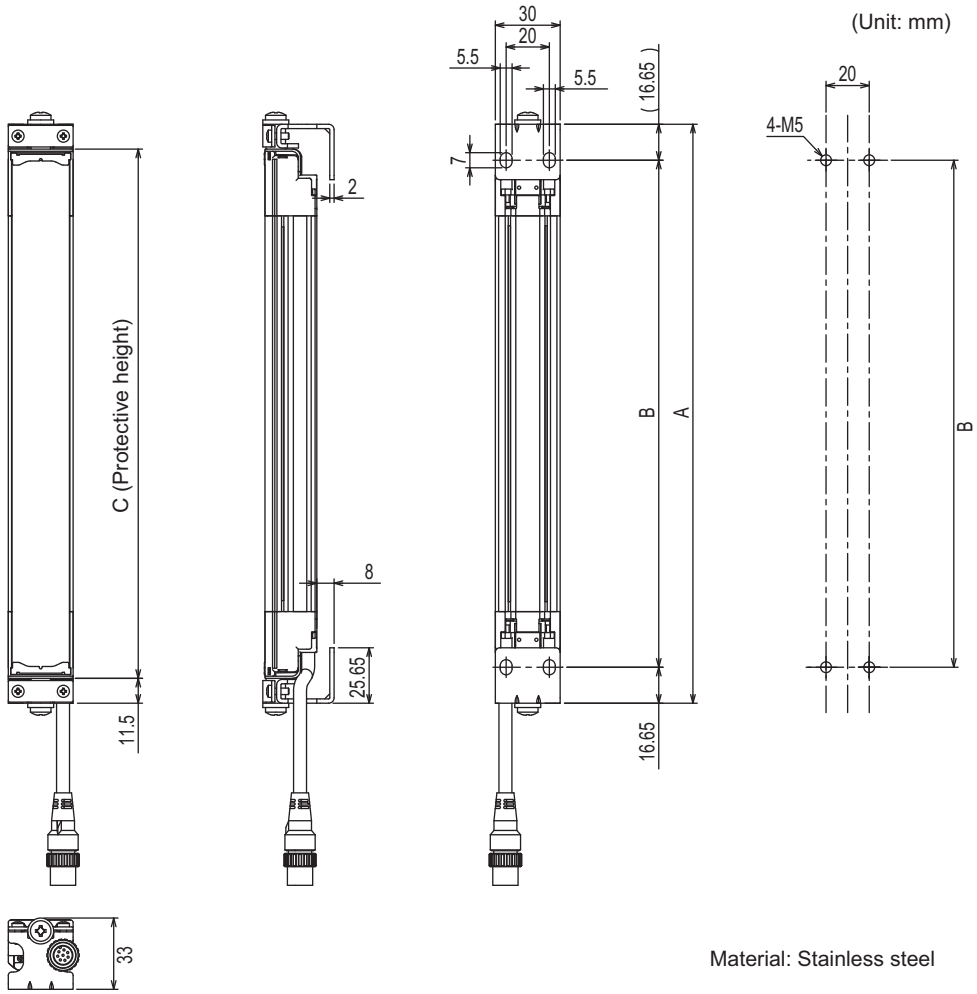

Material: Stainless steel

Dimensions A to C

A	C + 23
B	C - 10.3
C	4-digit number of the model name (protective height)

CHECK!

The F39-LJ8 and intermediate mounting brackets cannot be mounted simultaneously, so set the protective height to 600mm or less.

■ F39-LJ9 Mounting Bracket for F3W-C Replacement

Use these brackets to replace F3W-C.

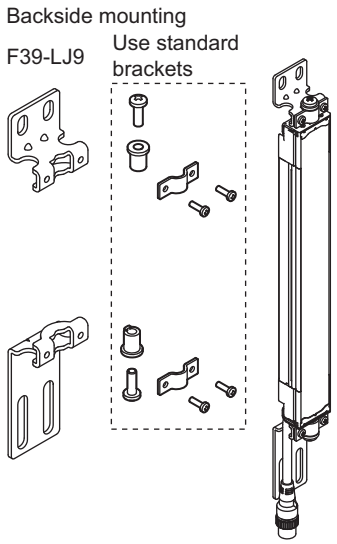

(Unit: mm)

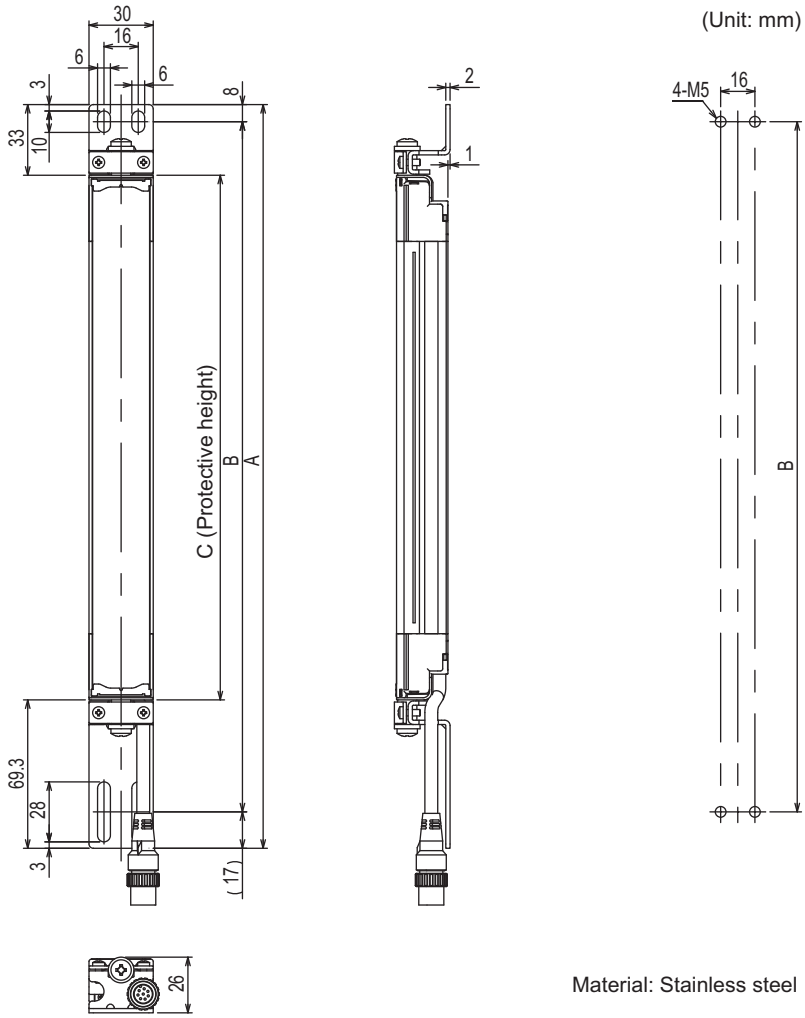

Material: Stainless steel

Dimensions A to C

A	C + 102.3
B	C + 77.3
C	4-digit number of the model name (protective height)

Side mounting

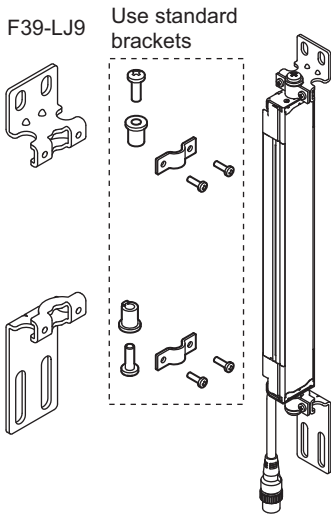

(Unit: mm)

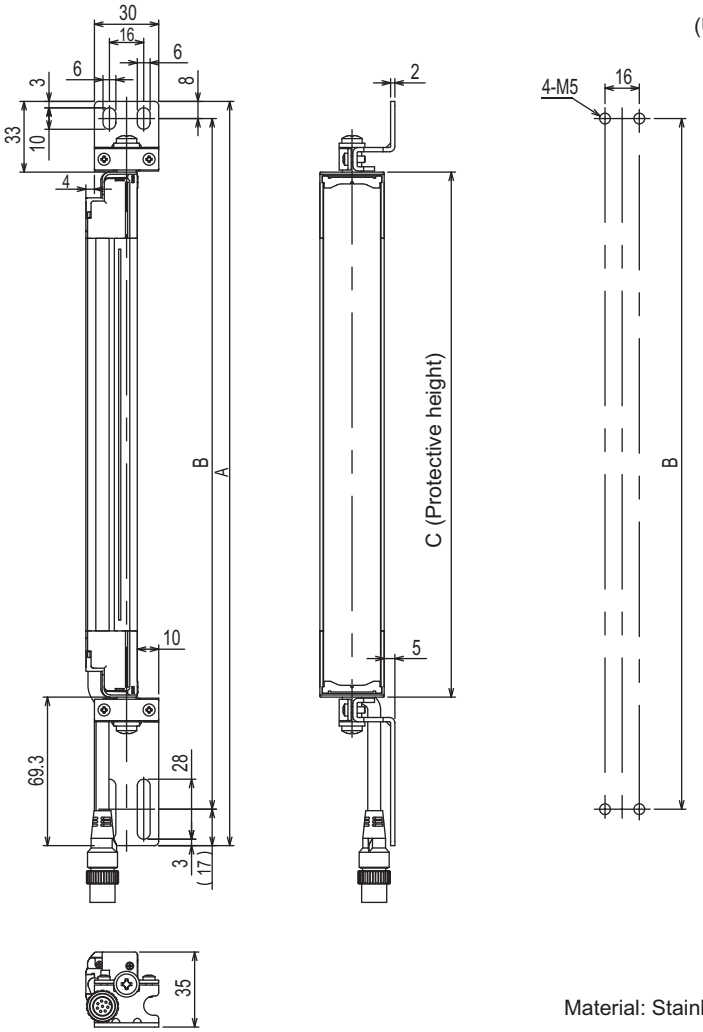

Material: Stainless steel

Dimensions A to C

A	C + 102.3
B	C + 77.3
C	4-digit number of the model name (protective height)

F3W-C replacement correspondence table (F3W-C mounting holes can be used without modification)

•When replacing F3W-C□□□□ with F3SJ-A□□□□30

Target F3W-C□□□□4

F3SN		Replacement F3SJ	
Model	Protective height	Model	Protective height
F3W-C044	120	-	-
F3W-C084	280	F3SJ-A0320□30	320
F3W-C124	440	F3SJ-A0470□30	470
F3W-C164	600	F3SJ-A0620□30 *1	620
F3W-C204	760	F3SJ-A0795□30 *1	795
F3W-C244	920	F3SJ-A0945□30 *1	945

*1 New mounting holes are required for intermediate mounting brackets.

■ F39-LJ11 Top/bottom Mounting Bracket C

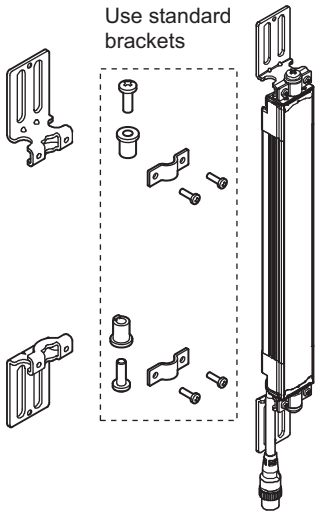

(Unit: mm)

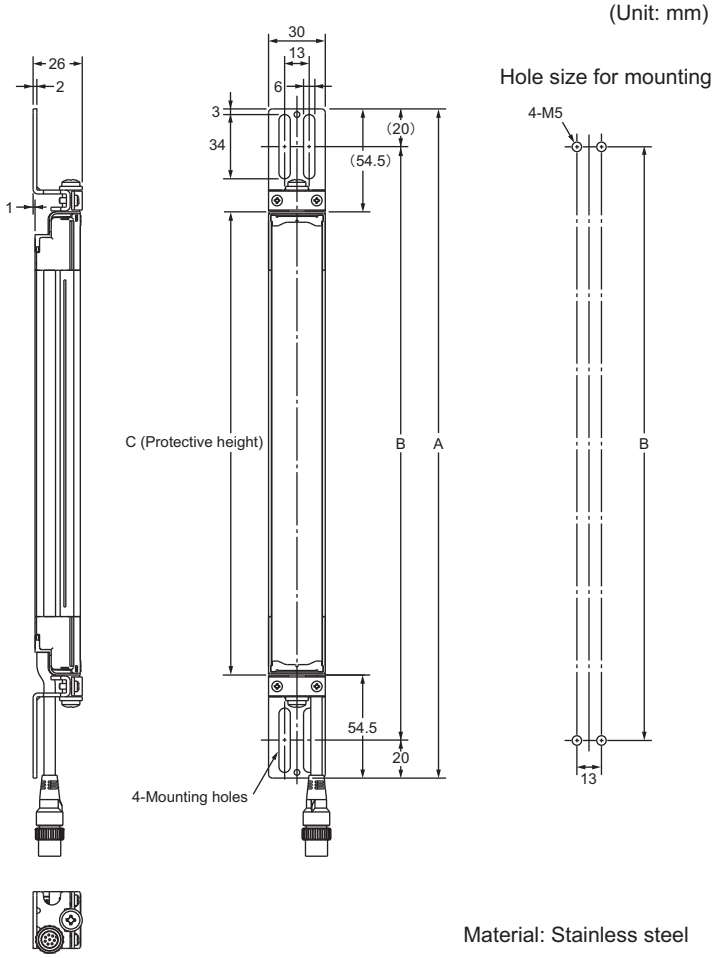

Material: Stainless steel

Dimensions A to C

A	C + 109
B	C + 69
C	4-digit number of the model name (protective height)

F39-A01P□-PAC External Indicator Set

•F39-A01P□-PAC

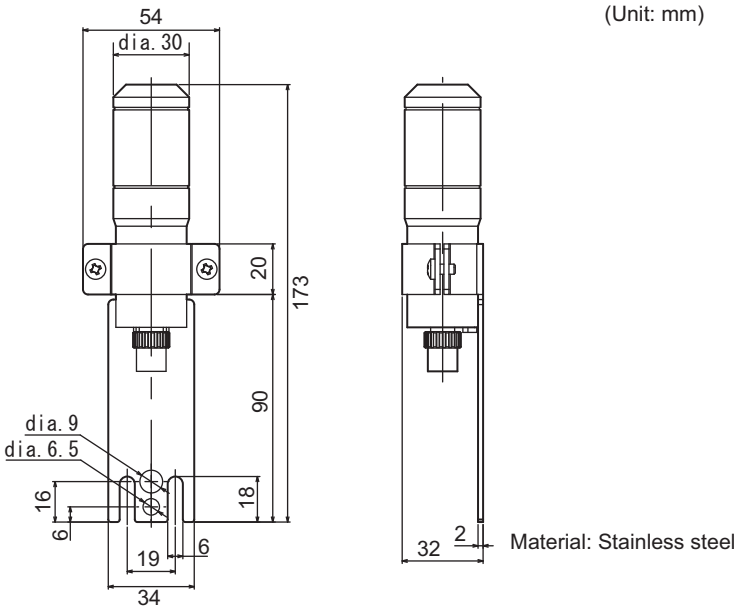

When Using Spatter Protection Covers

■ Dimensions of the Spatter Protection Cover F39-HJ□□□□

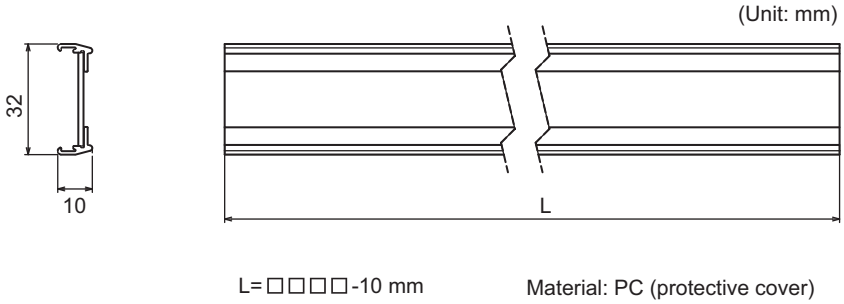

■ Assembly Dimensions

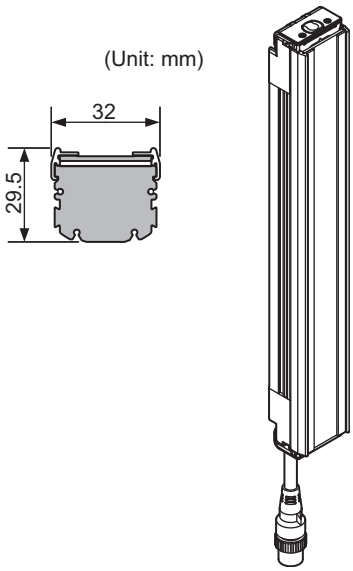

Setting Tool

■ F39-GWUM PC Tool for F3SJ

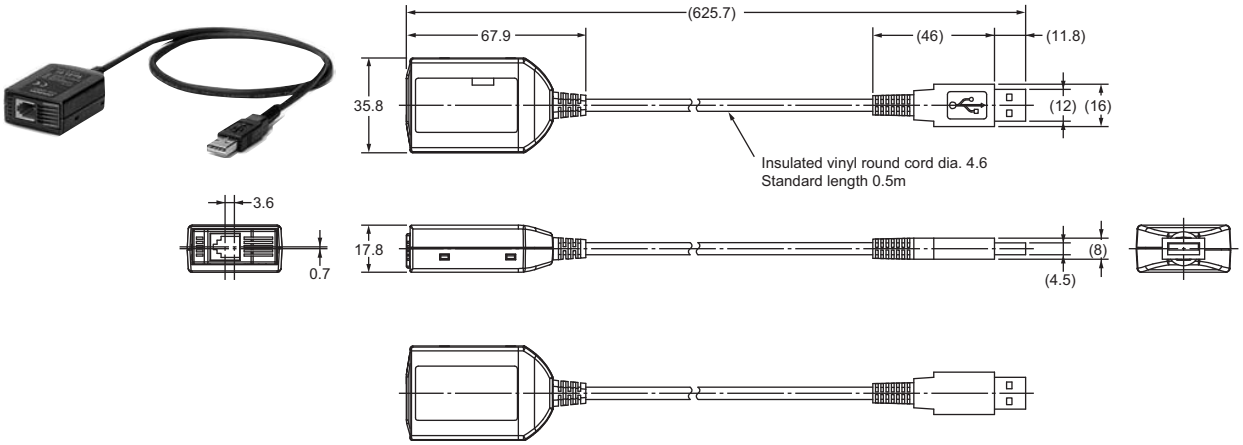

■ F39-MC21 Setting Console

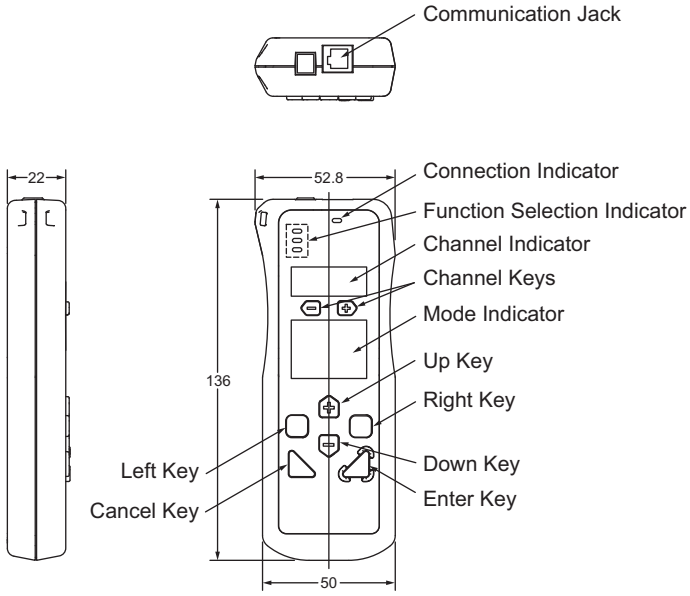

Mounting a Protect Bar

■ External Dimensions of Protect Bar F39-PJ□□□□-S

Backside mounting

(Unit: mm)

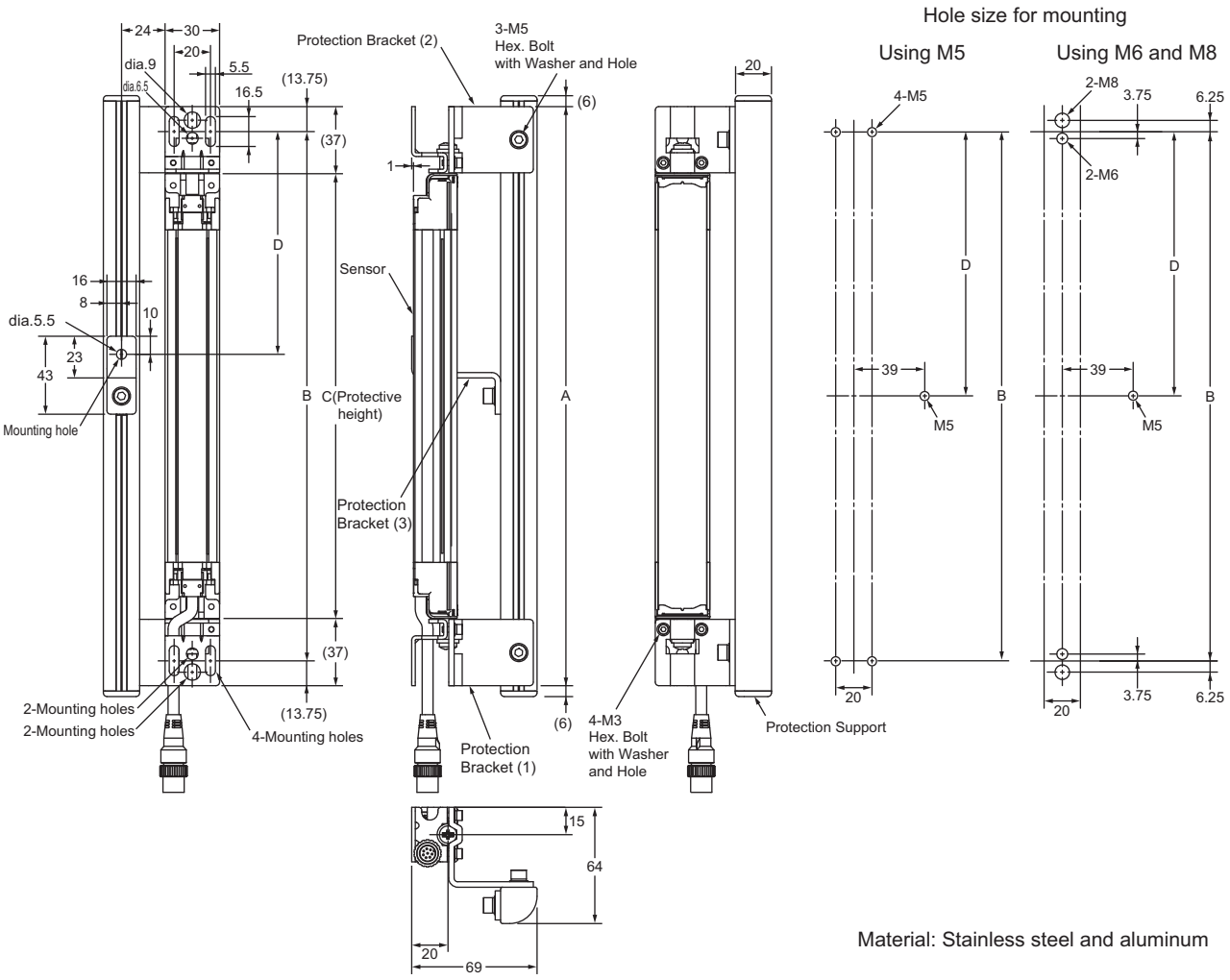

Material: Stainless steel and aluminum

Dimensions A to C

A	C+74
B	C+46.5
C	4-digit number of the model name (protective height)

Dimension D

Protective height	Number of used protection brackets (3)	D *1
245 to 1000	0	-
1001 to 2000	1	B/2
2009 to 2500	2	B/3

*1 D is for reference and must be a length that should not affect intermediate mounting bracket

Side mounting

(Unit: mm)

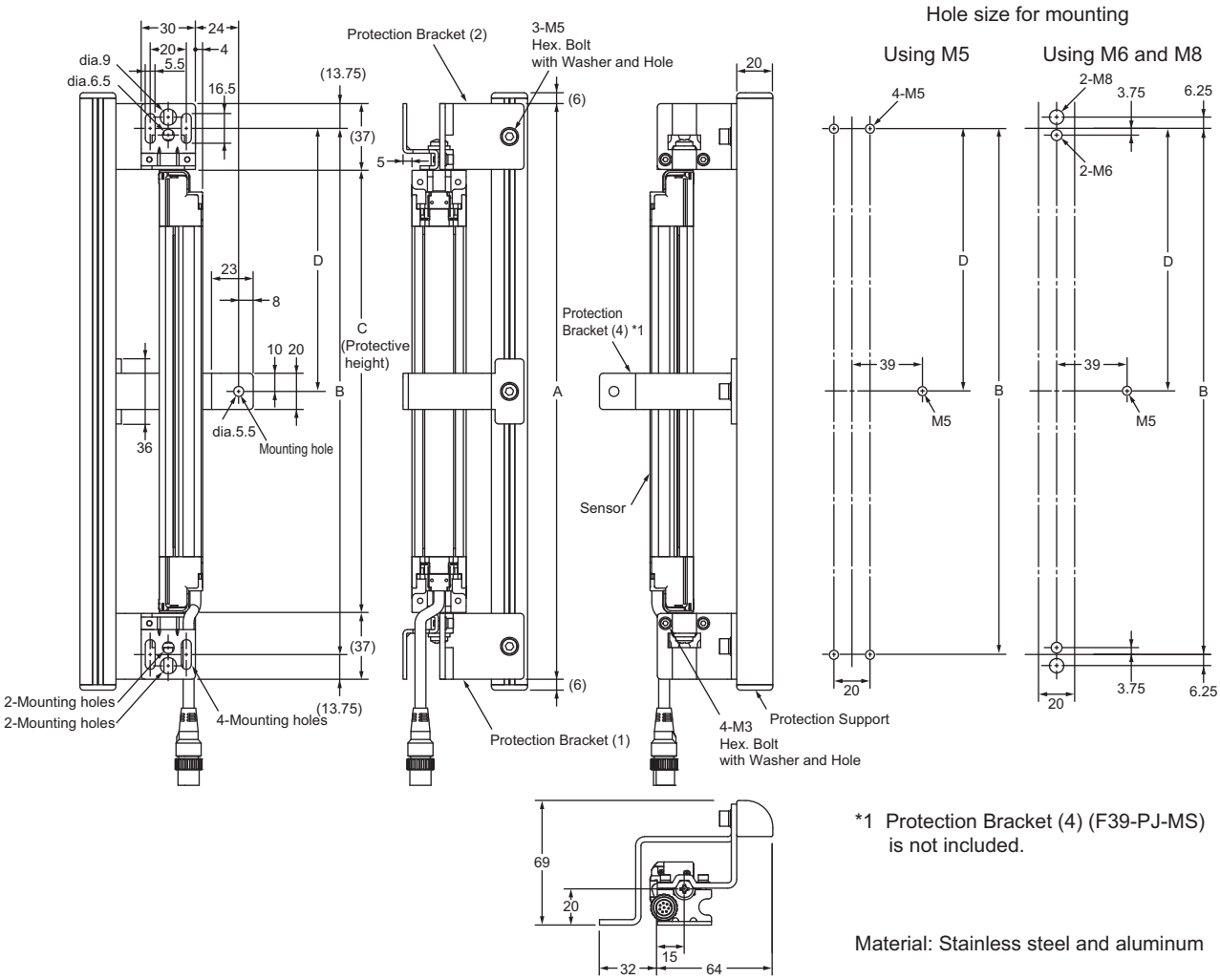

*1 Protection Bracket (4) (F39-PJ-MS) is not included.

Material: Stainless steel and aluminum

Dimensions A to C

A	C+74
B	C+46.5
C	4-digit number of the model name (protective height)

Dimension D

Protective height	Number of used protection brackets (4)	D *2
245 to 1000	0	-
1001 to 2000	1	B/2
2009 to 2500	2	B/3

*2 D is for reference and must be a length that should not affect intermediate mounting bracket

Mounting an Environment-Resistant Case

■ External Dimensions of Environment-Resistant Case F39-EJ□□□□

Backside mounting

(Unit: mm)

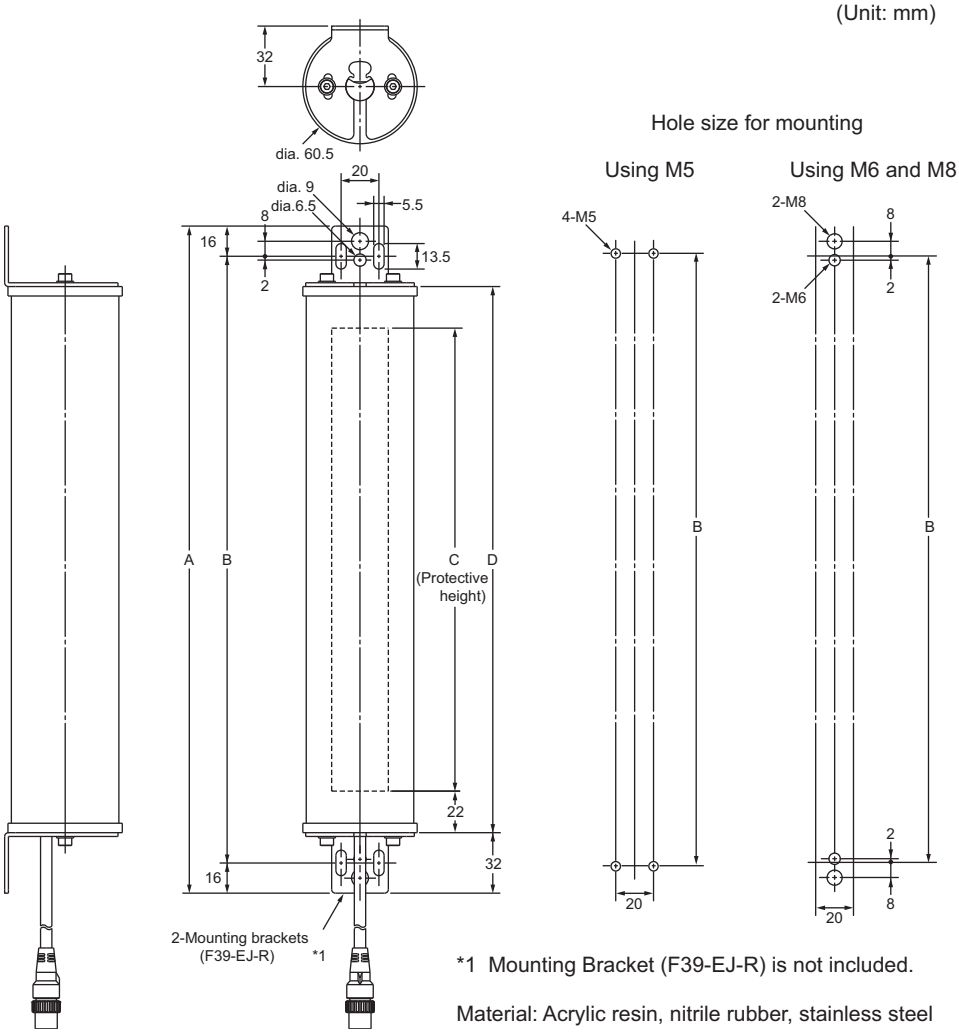

*1 Mounting Bracket (F39-EJ-R) is not included.

Material: Acrylic resin, nitrile rubber, stainless steel

Dimensions A to D

A	C+108
B	C+76
C	4-digit number of the model name (protective height)
D	C+44

Side mounting

(Unit: mm)

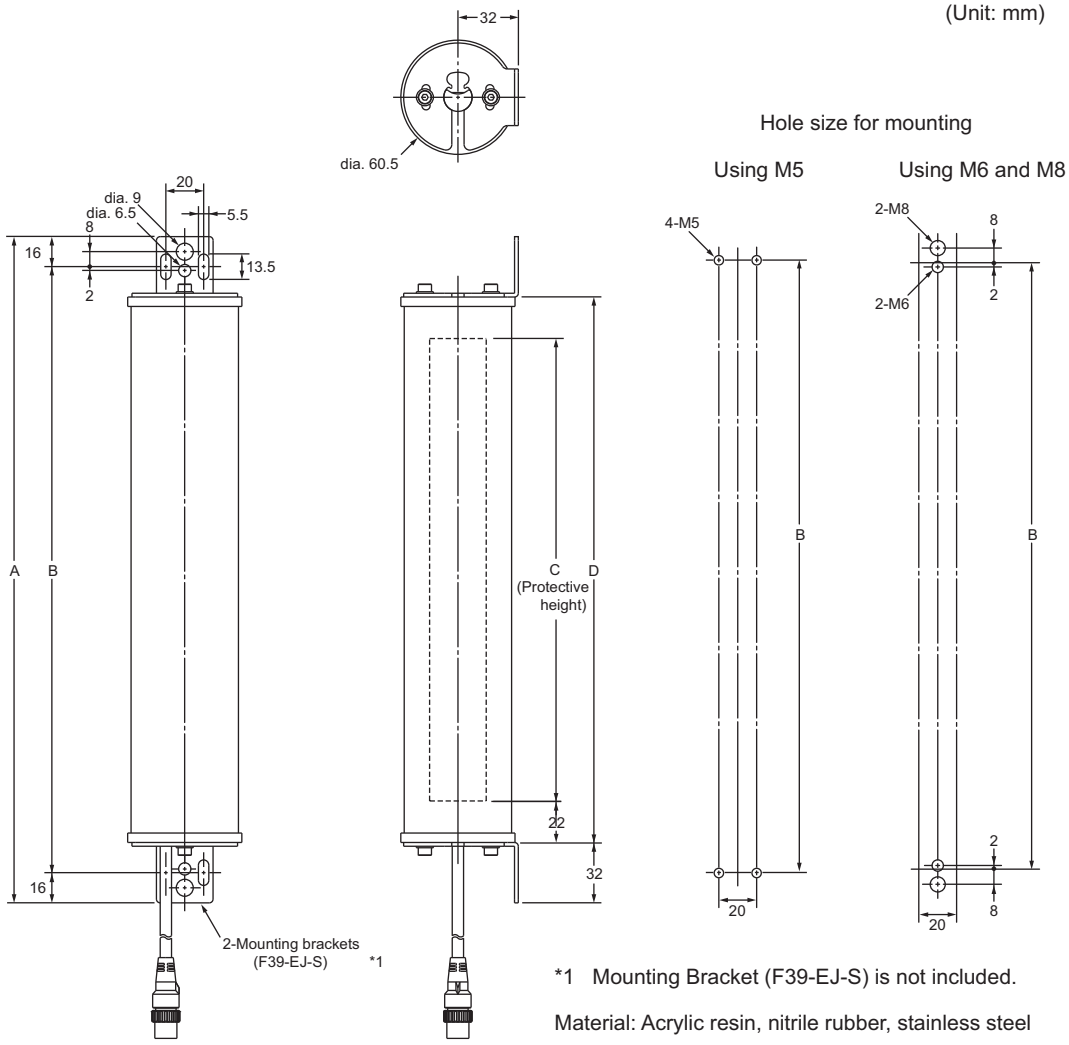

*1 Mounting Bracket (F39-EJ-S) is not included.

Material: Acrylic resin, nitrile rubber, stainless steel

Dimensions A to D

A	C+108
B	C+76
C	4-digit number of the model name (protective height)
D	C+44

Mounting

The procedures for using standard mounting brackets (included) are explained in this section.

Top/Bottom Mounting Brackets

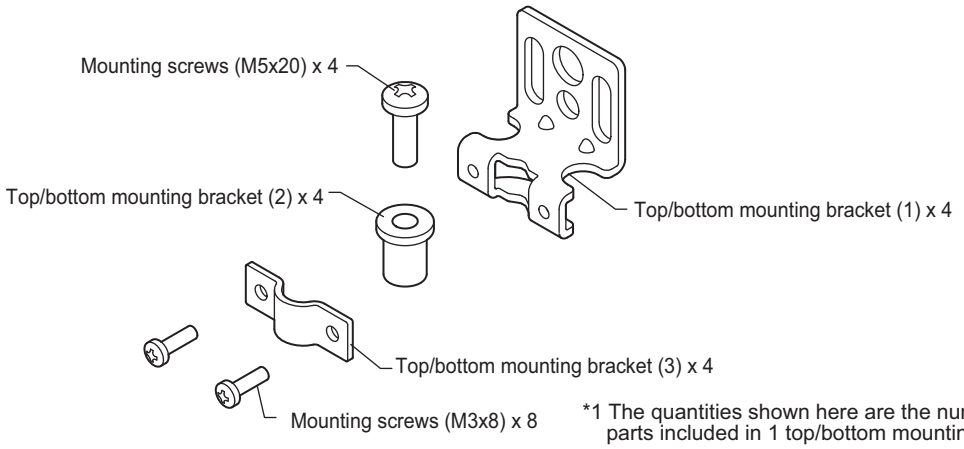

*1 The quantities shown here are the number of parts included in 1 top/bottom mounting bracket set

Material: Stainless steel (top/bottom mounting bracket (1), (3))
Brass (top/bottom mounting bracket (2))
Iron (mounting screws)

Intermediate Mounting Brackets

The number of intermediate mounting brackets included with F3SJ of various protective heights is shown below.

Protective height	Number of intermediate mounting brackets
0245 to 0596	0
0600 to 1130	1
1136 to 1658	2
1660 to 2180	3
2195 to 2500	4

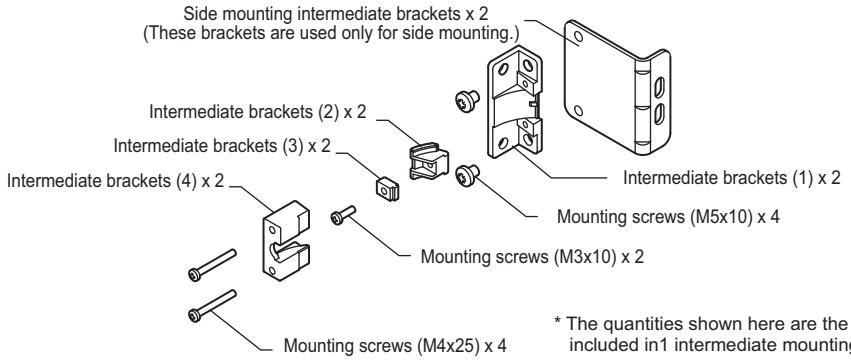

* The quantities shown here are the number of parts included in1 intermediate mounting bracket set

Material: Stainless steel (intermediate mounting bracket)
Zinc die-cast (Intermediate mounting brackets (1) to (4))
Iron (mounting screws)

CHECK!

- To use other mounting bracket or bolt than those for F3SJ, you must confirm that their sizes should match F3SJ. Especially when you do not use top/bottom mounting brackets (2), you may need screws with appropriate length because the standard mounting screws (M5 x 20) may be too long.
- If the protective height is 600 mm or more, use intermediate mounting brackets of specified quantities and locations according to the dimensions.
  If the brackets described above are not used, ratings and performance cannot be not met.

Mounting Procedure

1. Attach the top/bottom mounting brackets.

Place top/bottom mounting bracket (2) in the screw hole at the top/bottom of the F3SJ, and fasten it using the included screw (M5x20). Insert the bracket's protrusion into the groove on the case when attaching. Next, attach top/bottom mounting brackets (3) and (1) to top/bottom mounting bracket (2), and fasten them lightly using the included screws (M3x8).

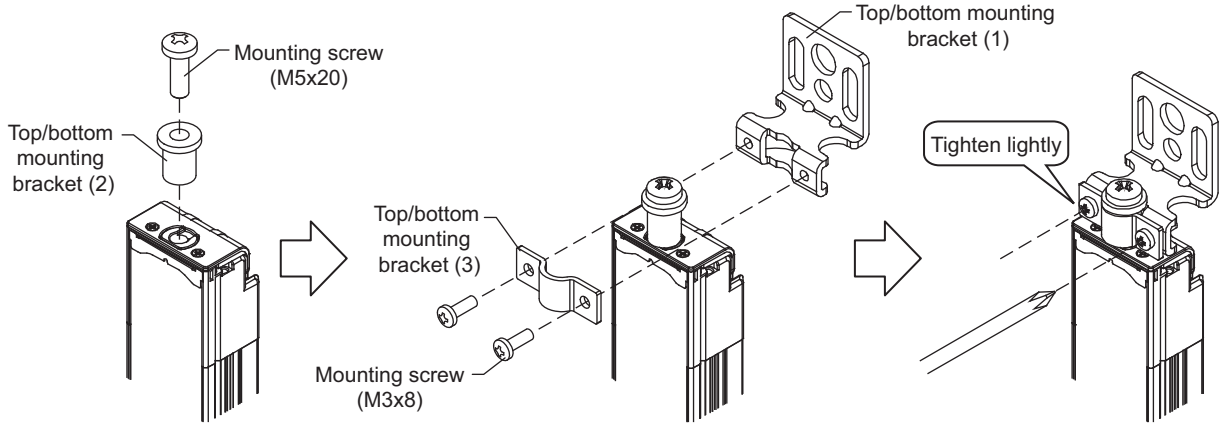

2. Attach the intermediate mounting brackets.

Insert intermediate brackets (2) and (3) into the grooves on the side of the case, and use the included mounting screws (M3x10) to lightly fasten the brackets so that they are able to slide up and down the case.

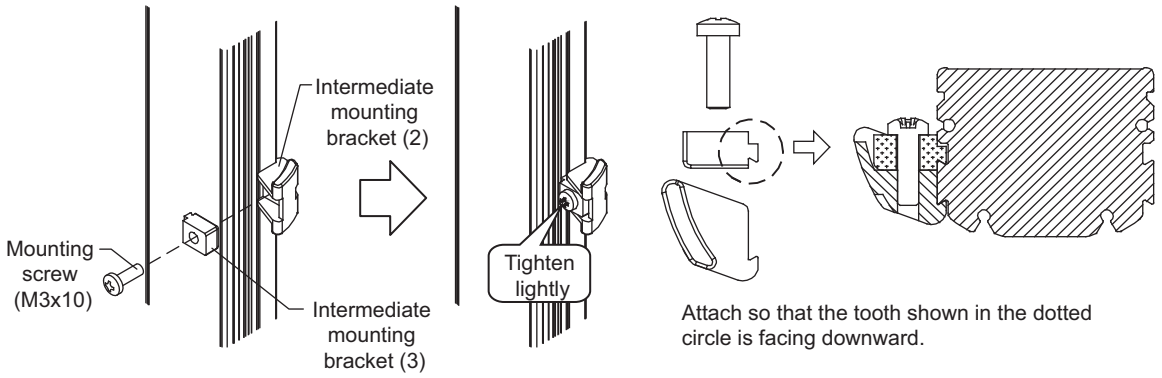

3. Attach the intermediate mounting brackets (for backside mounting).

For backside mounting, first lightly attach intermediate mounting bracket (1) to the equipment, wall surface, etc. Then, attach intermediate brackets (1) and (4) to the bracket that was lightly attached to the case in step 2 above, and lightly tighten them using the included mounting screws (M4x25).

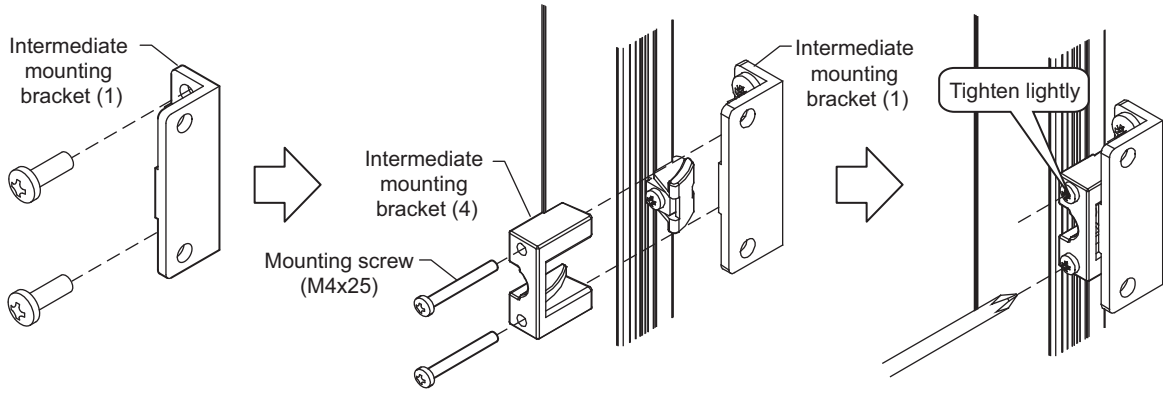

4. Attach the intermediate mounting brackets (for side mounting).

When performing side mounting, first attach the intermediate mounting bracket for side mounting to intermediate mounting bracket (1), using the included mounting screws (M5x10). Then, lightly attach intermediate mounting bracket (4) to the bracket that was lightly attached to the case in step 2 above, using the included mounting screws (M4x25).

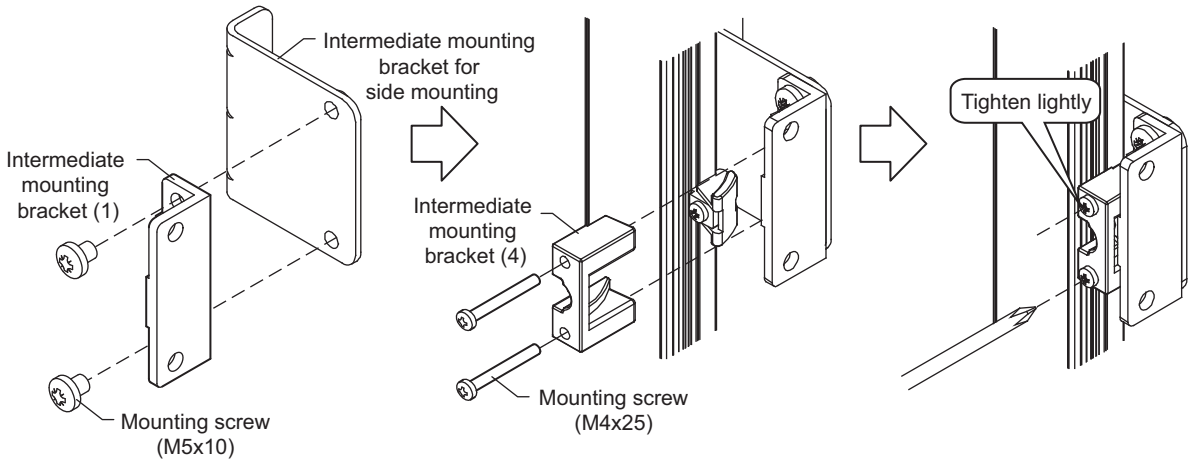

5. Fasten to equipment.

Attach top/bottom mounting bracket (1) to the equipment, wall surface, etc. If you are using an intermediate mounting bracket for side mounting, also attach the side-mounting intermediate bracket to the equipment, wall surface, etc. After the F3SJ is mounted, securely tighten the mounting screws (M3x10) that were lightly tightened in step 2 above.

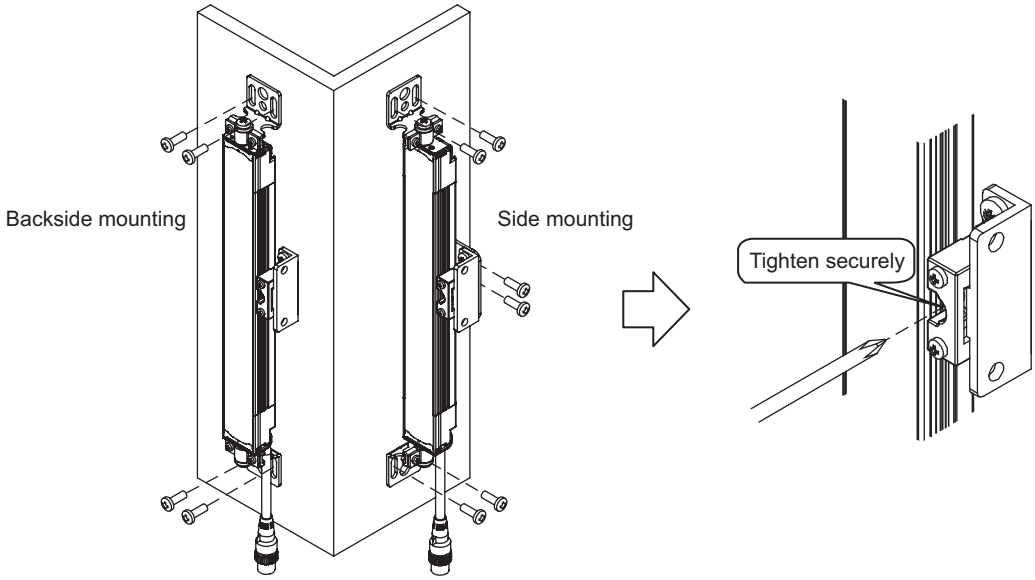

6. Adjust the beams.

Move the F3SJ from side to side to align it to a center position where the 5 lamps of the incident light level indicator are turned ON. After each screw is securely tightened after beam adjustment, make sure that the 5 lamps of the incident light level indicator are turned ON.

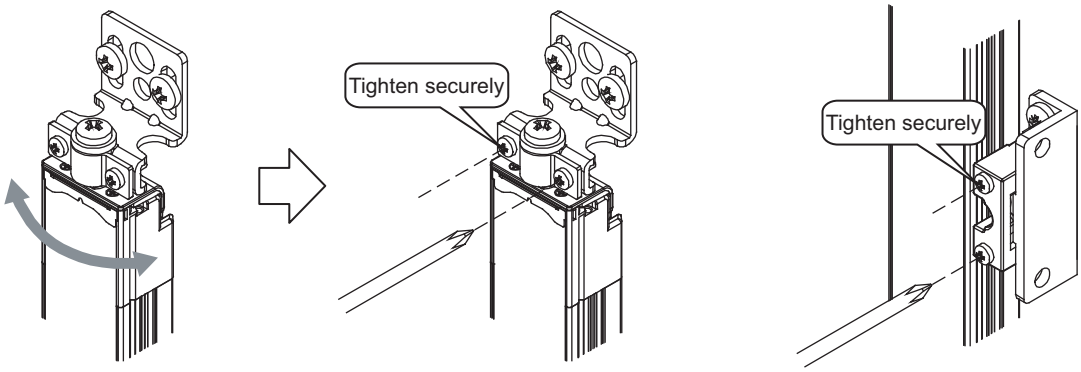

CHECK!

Do not fully tighten the screws one by one. Tighten all screws evenly.

Mounting is complete.For adjustment of beams and tightening torque, see "Adjustment Procedure" in the next page.

Adjustment Procedure

1. Check the following points:
   - The optical surface of the emitter and receiver should be clean.
   - There should be no interrupting object in the detection zone of the F3SJ.

2. Adjust the emitter's beams.
   Adjust the angle of the emitter while checking the incident light level indicator, and align the emitter so that it faces the center position where the incident light level indicator turns ON.

3. Adjust the receiver's beams.
   Adjust the angle of the receiver while checking the incident light level indicator, and align the receiver so that it faces the center position where the incident light level indicator turns ON.

4. Make sure that all 5 lamps of the incident light level indicator are turned ON.

5. While taking care not to change the adjustment status of the beams, tightly fasten all the bracket screws and mounting screws.
   The table below shows the tightening torques for the included screws.

Mounting bracket type	Nominal diameter x length of screw (mm)	Tightening torque
Top/bottom mounting brackets	M3x8	0.54N• m
	M5x20	2.3N• m
Intermediate mounting brackets	M3x10	0.54N• m
	M4x25	1.2N• m
	M5x10	2.3N• m

CHECK!
- If some of the 5 lamps of the incident light level indicator are not turned ON even when the receiver angle is adjusted, check whether or not the mounting surfaces of the emitter/receiver are parallel, and whether or not the mounting height of the emitter/receiver is appropriate.
- You must comply with specified tightening torque and screw sizes. Otherwise a failure may occur.

Wiring

Wiring Precautions

⚠ WARNING

Double or reinforced insulation from hazardous voltage must be applied to all input and output lines. Failure to do so may result in electric shock.

Connect the load between the output and 0V line. (PNPoutput)
Connecting between the output and +24V line is dangerous because the operation mode is reversed to "ON when blocked".

Do not short-circuit the output line to the +24V line.
Otherwise, the output is always ON. Also, the 0V of the power supply must be grounded so that output does not turn ON due to grounding of the output line.

Configure the system by using the optimal number of safety outputs that satisfy the requirements of the necessary safety category.

Do not connect each line of F3SJ to a DC power supply higher than 24V+20%. Also, do not connect to an AC power supply.
Failure to do so may result in electric shock.

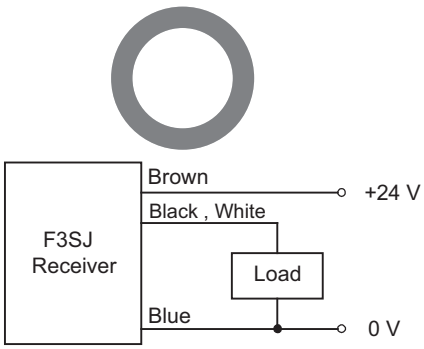

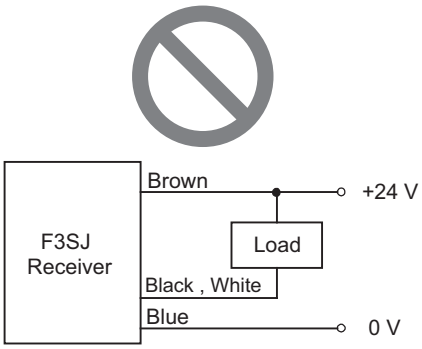

Power Supply Unit

⚠ WARNING

For the F3SJ to comply with IEC 61496-1 and UL 508, the DC power supply unit must satisfy all of the following conditions:

- Must be within the rated power voltage (24V DC ± 20%)
- Must have tolerance against the total rated current of devices if it is connected to multiple devices
- Must comply with EMC directives (industrial environment)
- Double or reinforced insulation must be applied between the primary and secondary circuits
- Automatic recovery of overcurrent protection characteristics (reversed L sagging)
- Output holding time must be 20ms or longer
- Must satisfy output characteristic requirements for class 2 circuit or limited voltage current circuit defined by UL508 (Refer to remarks)
- **Must comply with laws and regulations regarding EMC and electrical equipment safety of the country or region where the F3SJ is used (Ex: In EU the power supply must comply with the EMC Directive and the Low Voltage Directive.)**

(Remarks)

To prevent a fire, the secondary circuit of the power supply must satisfy either of the following conditions in accordance with UL 508:

- As with secondary winding of isolation transformer, there must be a limited current voltage circuit to which isolated power supply provides power, and the "current is limited to 8A max. (including short-circuit)" or "circuit protection such as a fuse is used to limit the current, which has a rating of 4.2A max." (24VDC power supply).
  Recommended power supply: OMRON S82K (15 W, 30 W, 50 W, 90 W type), S8VS (60 W type), S82J (10 W, 25 W, 50 W type)
  These products are approved by UL listing (UL508, class 2 power supply), CE marking compatible (EMC/Low Voltage Directive).
- Class 2 power supply unit complying with UL 1310, or a circuit using 2 transformers complying with UL 1585 as a power supply.

CHECK!

Sharing the power supply with other devices may cause the F3SJ to be affected by noise or voltage drop. It is recommended that this safety component use a dedicated power supply but do not share with other devices.

Wiring Procedure

1. Connect an emitter cable (F39-JD□□-L, grey, sold separately) to the emitter's connection cable (grey).
2. Connect a receiver cable (F39-JD□□-D, black, sold separately) to the receiver's connection cable (black).
3. Connect the 0V line of the power supply directly to the protective earth (PE).

CHECK!

To ensure proper wiring, check that the color of the cable matches the color of the connector's resin cover (emitter: grey, receiver: black). Failure to do so may result in damage to the F3SJ. Incorrect wiring can be prevented by matching the colors.

■ Cable with Connector on One End (F39-JD□A, sold separately)

(Unit: mm)

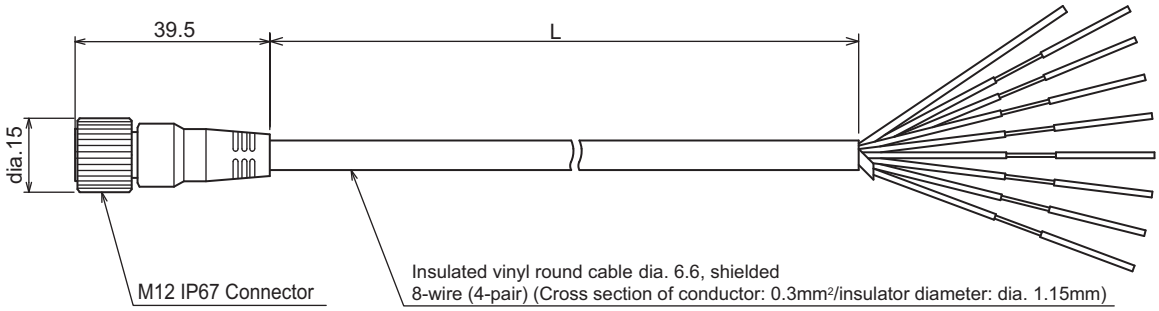

Set model name	For emitter		For receiver		L (mm)
F39-JD3A	F39-JD3A-L	Grey cable	F39-JD3A-D	Black cable	3000
F39-JD7A	F39-JD7A-L		F39-JD7A-D		7000
F39-JD10A	F39-JD10A-L		F39-JD10A-D		10000
F39-JD15A	F39-JD15A-L		F39-JD15A-D		15000
F39-JD20A	F39-JD20A-L		F39-JD20A-D		20000

Internal wiring diagram (F39-JD□A-L, F39-JD□A-D)

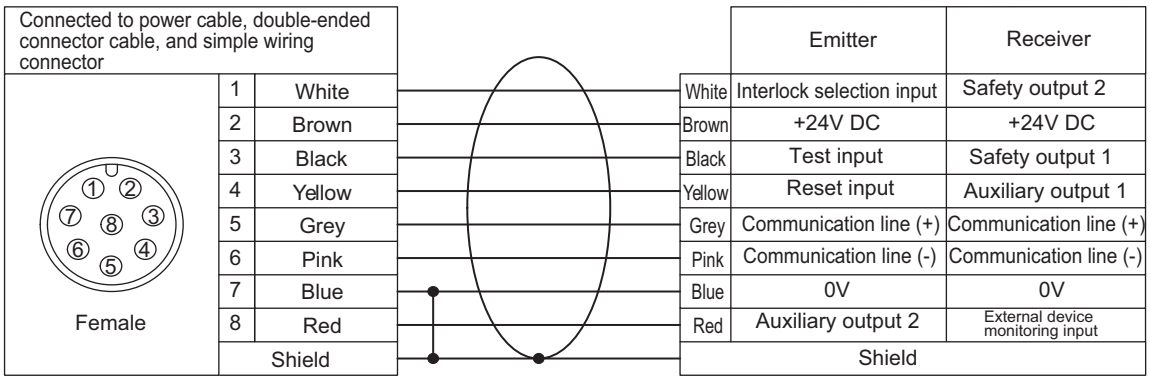

Twisted pair wires are white and red, brown and blue, black and yellow, and grey and pink.

■ Series Connection Cable for Close Contact(F39-JJR□L, sold separately)

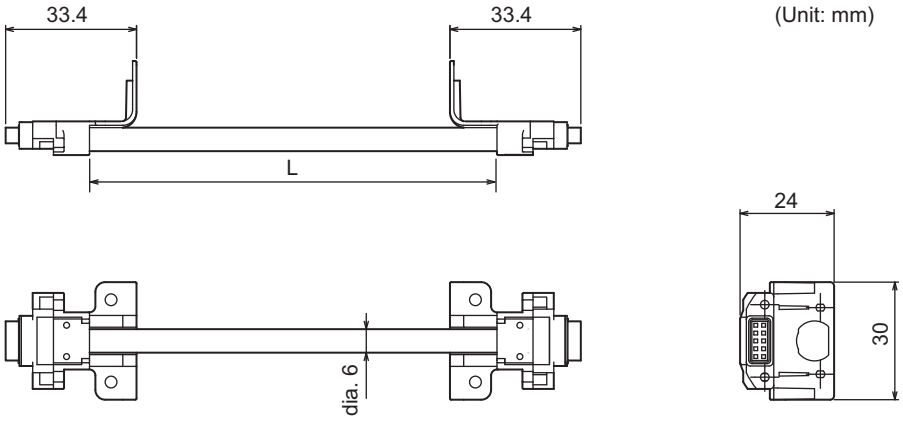

Set model name	For emitter		For receiver		L (mm)
F39-JJR06L	F39-JJR06L-L	Grey cable	F39-JJR06L-D	Black cable	60
F39-JJR15L	F39-JJR15L-L		F39-JJR15L-D		150

■ Series Connection Cable for Extension (F39-JJR3W, sold separately)

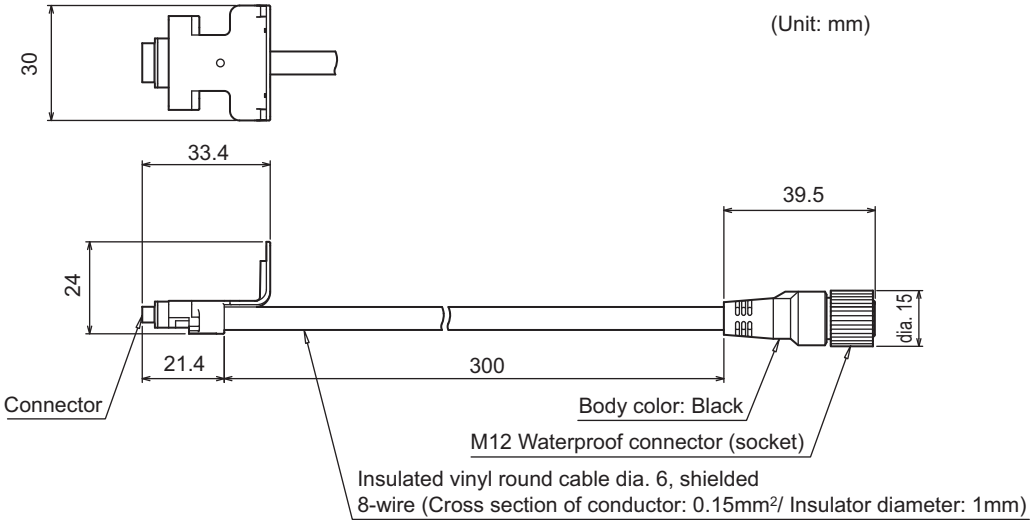

Set model name	For emitter		For receiver	
F39-JJR3W	F39-JJR3W-L	Grey cable	F39-JJR3W-D	Black cable

Connect a double-ended cable F39-JD□B in between. (The maximum length between series connections is 15m.)

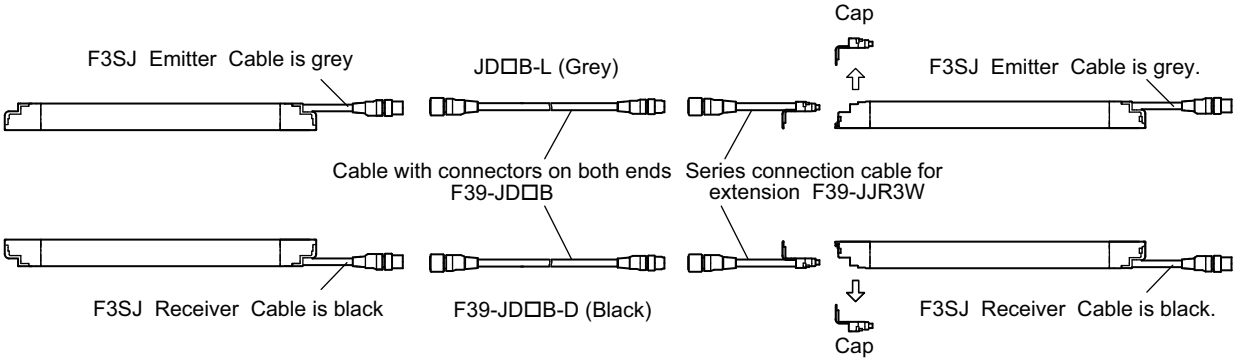

■ Connection Cable (F39-JJR3K, sold separately)

The connection cable is a standard included product. Purchase a replacement when damaged or lost.

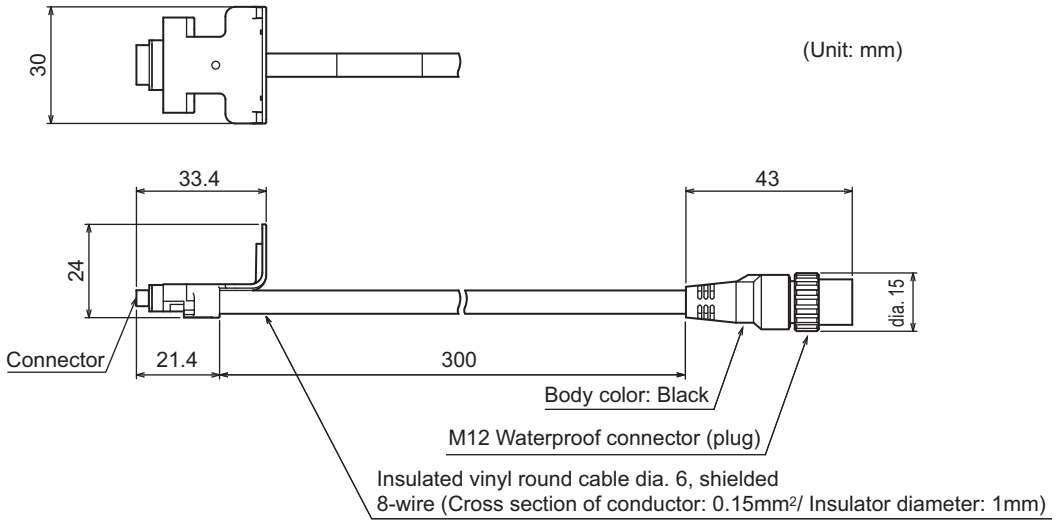

Set model name	For emitter		For receiver	
F39-JJR3K	F39-JJR3K-L	Grey cable	F39-JJR3K-D	Black cable

■ Cable with Connectors on Both Ends: Cable for Extension and for Connection to F3SP-B1P (F39-JD□B, sold separately)

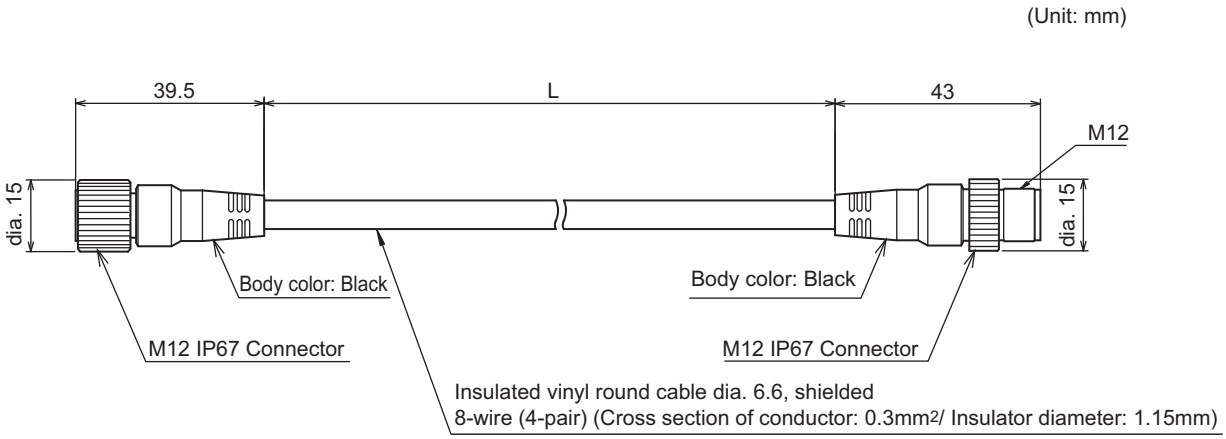

Set model name	For emitter		For receiver		L (mm)
F39-JDR5B	F39-JDR5B-L	Grey cable	F39-JDR5B-D	Black cable	500
F39-JD1B	F39-JD1B-L		F39-JD1B-D		1000
F39-JD3B	F39-JD3B-L		F39-JD3B-D		3000
F39-JD5B	F39-JD5B-L		F39-JD5B-D		5000
F39-JD7B	F39-JD7B-L		F39-JD7B-D		7000
F39-JD10B	F39-JD10B-L		F39-JD10B-D		10000
F39-JD15B	F39-JD15B-L		F39-JD15B-D		15000
F39-JD20B	F39-JD20B-L		F39-JD20B-D		20000

Internal wiring diagram (F39-JD□B-L, F39-JD□B-D)

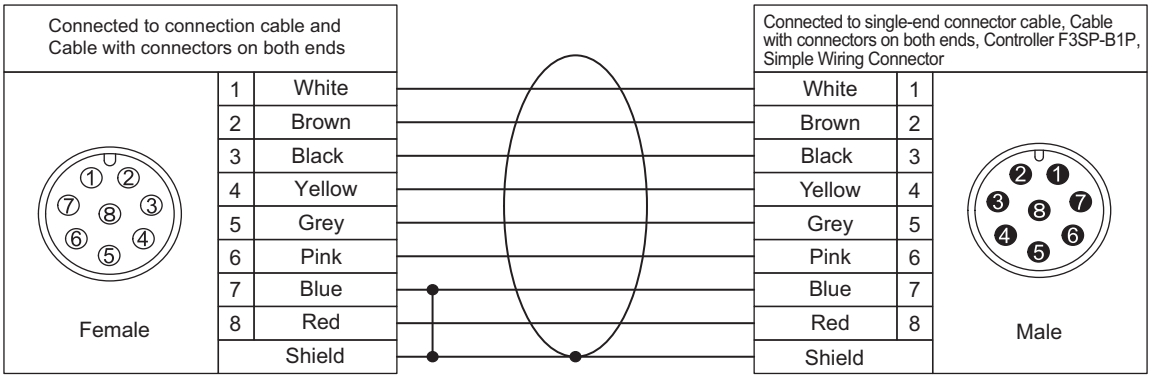

Twisted pair wires are white and red, brown and blue, black and yellow, and grey and pink

If the length of the F39-JD□A single-end connector cable is insufficient, use 1 or more F39-JD□B double-end connector cables to extend the length, as required.
Connection example

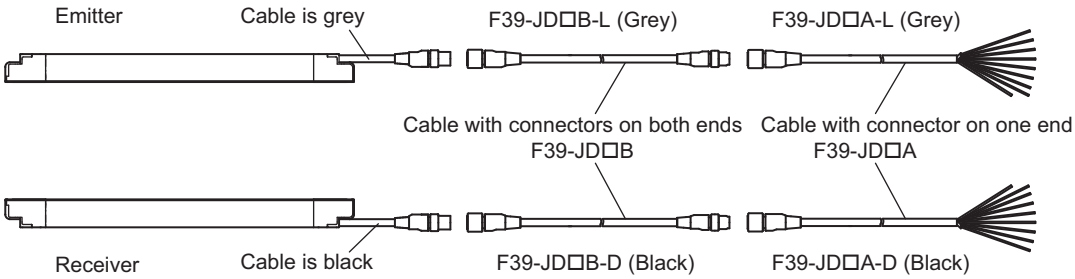

■ Cable with Connectors on Both Ends: Cable for Connection with G9SA-300-SC (F39-JC□C, sold separately)

(Unit: mm)

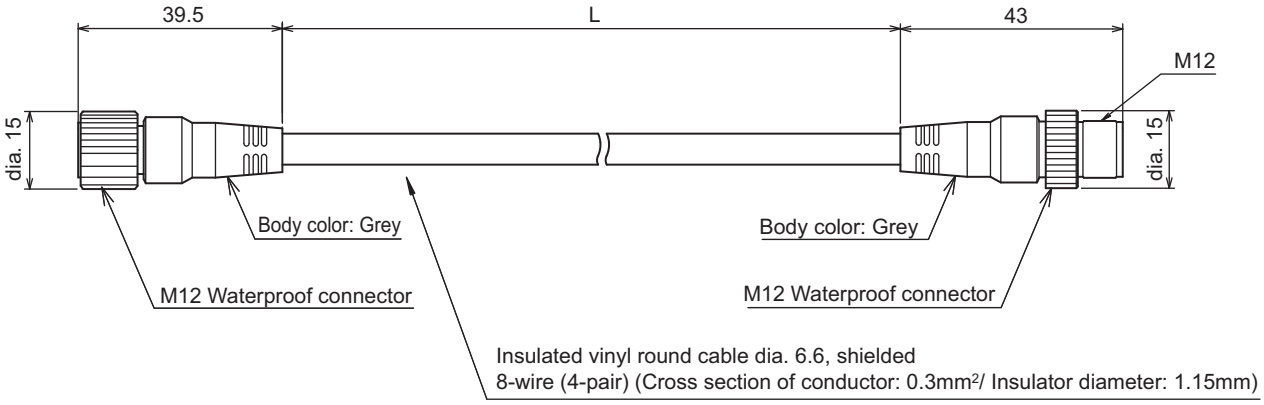

Set model name *1	For emitter		For receiver		L (mm)
F39-JCR2C	F39-JCR2C-L	Grey cable	F39-JCR2C-D	Black cable	200
F39-JC1C	F39-JC1C-L		F39-JC1C-D		1000
F39-JC3C	F39-JC3C-L		F39-JC3C-D		3000
F39-JC7C	F39-JC7C-L		F39-JC7C-D		7000
F39-JC10C	F39-JC10C-L		F39-JC10C-D		10000
F39-JC15C	F39-JC15C-L		F39-JC15C-D		15000

*1 Use only 1 set of F39-JC□C. If the cable length is insufficient, use F39-JD□B for extension so that F39-JC□C should be on the side of G9SA-300-SC.

Internal wiring diagram (F39-JC□C-L)

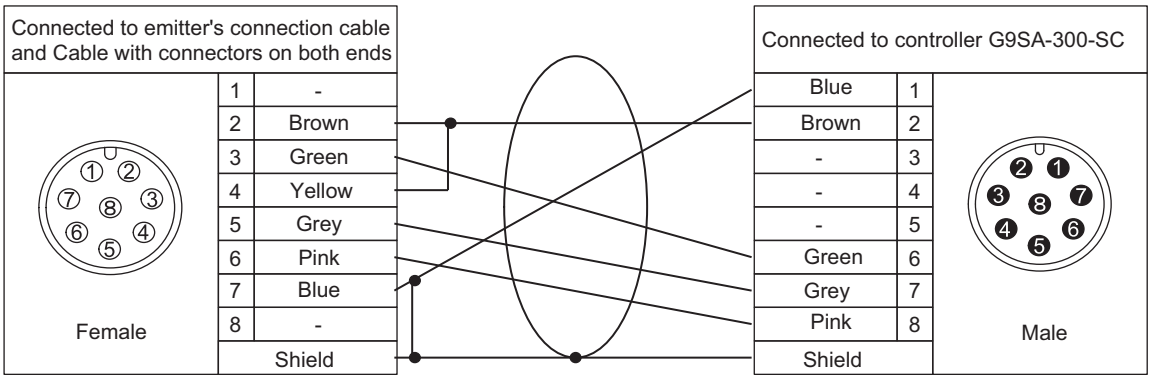

Internal wiring diagram (F39-JC□C-D)

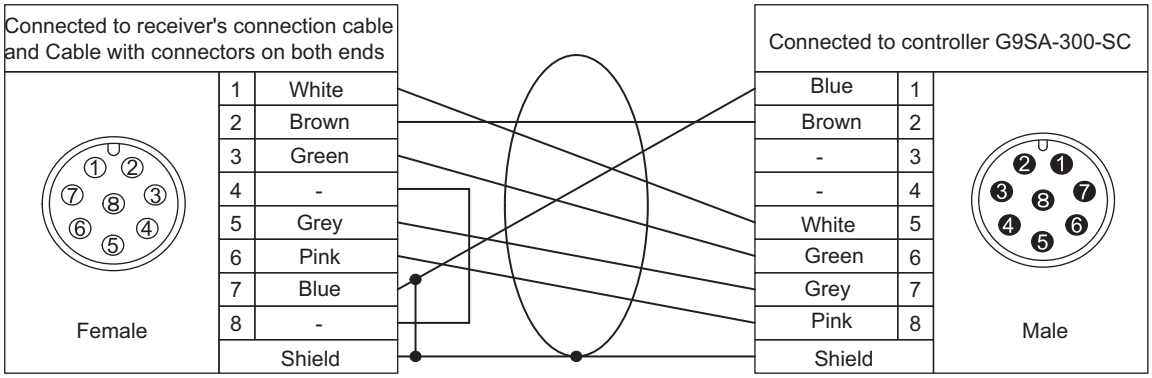

■ Simple Wiring Connector System

A combination of a double-ended cable for an emitter (F39-JD□B-L), a single-ended cable for a receiver (F39-JD□A-D), and a simple wiring connector (optional: F39-CN5) can be used for a reduced wiring system.

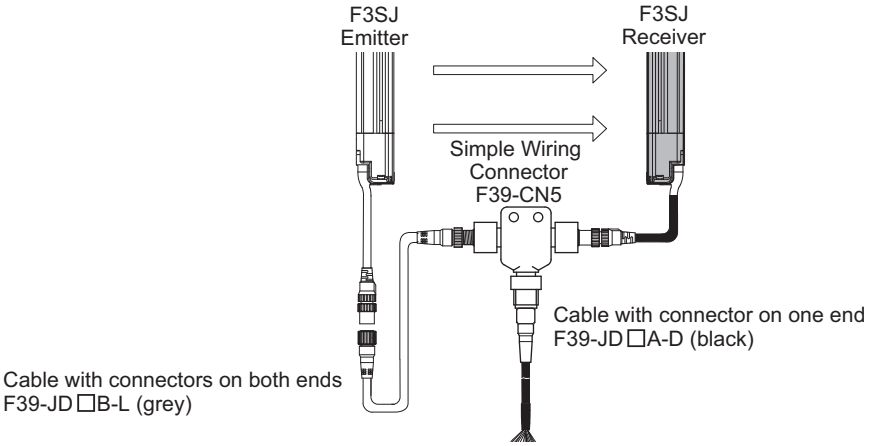

■ Cable for reduced wiring (optional: F39-JD□BA)

A set of two cables; a double-ended cable for an emitter (F39-JD□B) and a single-ended cable for a receiver (F39-JD□A-D). Used in combination with a simple wiring connector (optional: F39-CN5).
See the following page for details of a double-ended cable for an emitter (F39-JD□B-L) and a single-ended cable for a receiver (F39-JD□A-D).

Cable with connectors on both ends p.161

Cable with connector on one end p.159

■ Simple wiring connector (optional: F39-CN5)

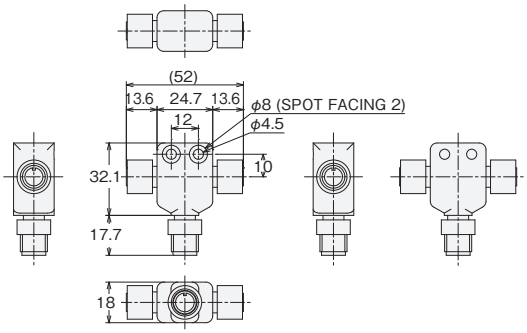

Internal Wiring Diagram (Optional: F39-CN5)

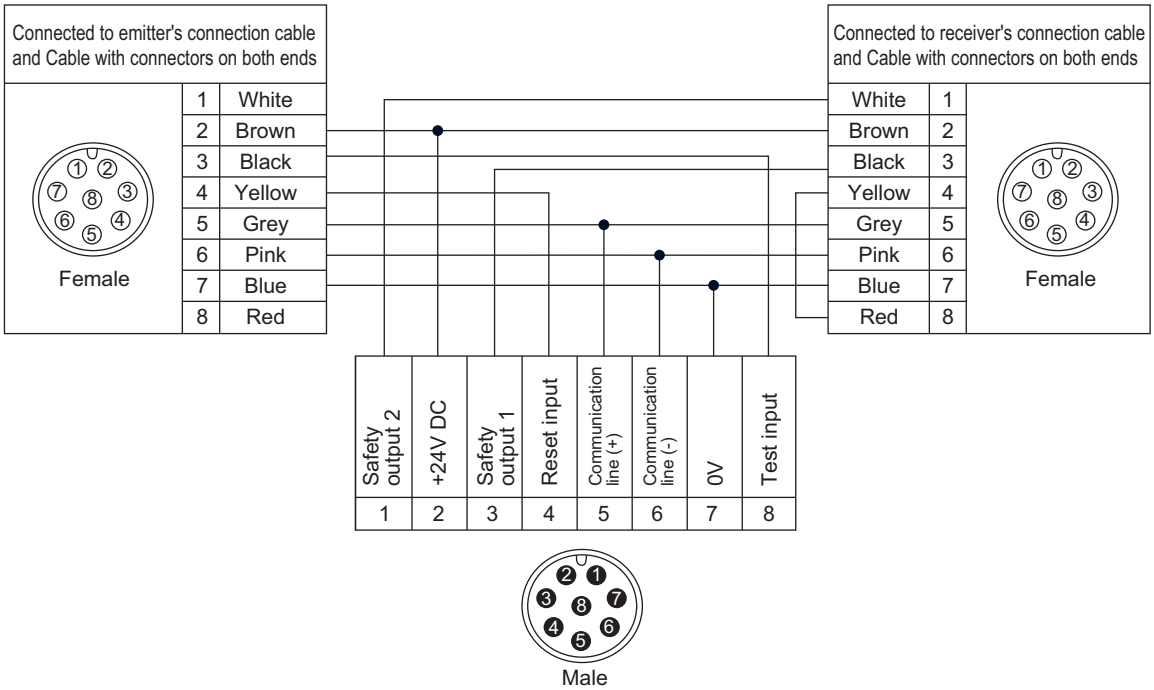

■ Universal indicator cable: A cable for connection with a commercial indicator (optional: F39-JJ3N)

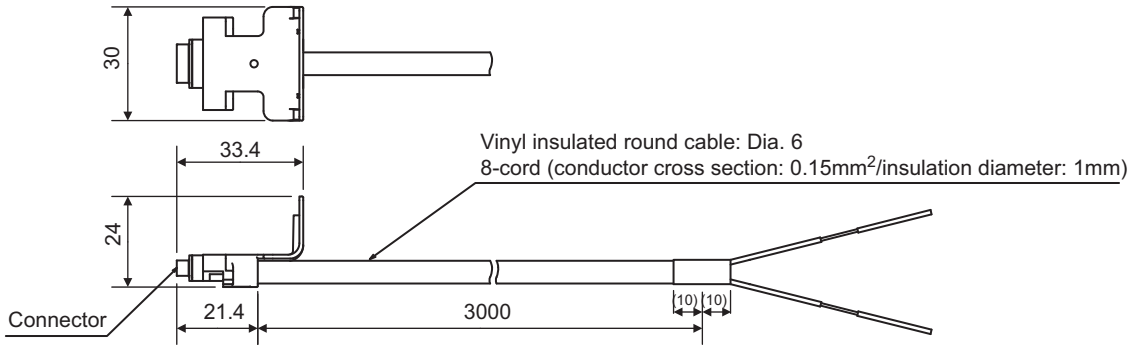

Chapter5 Input/Output Circuit and Applications

Input/Output Circuit	166
Wiring Examples	167
Using only F3SJ	167
Connecting 2 Muting Sensors	168
Connecting 4 Muting Sensors	169
Connecting to an F3SP-B1P	170
Connecting to an F3SX-E-L2R2	171
Connecting to a G9SA-301	172
Connecting to a G9SA-300-SC	173
Connecting to a G9SB-301-D	174
Connecting to a G9SX-AD322-T15	175
Using a Simple Wiring Connector	176

Input/Output Circuit

The numbers in white circles indicate the connector's pin numbers.
The black circles indicate connectors for series connection.
The words in brackets [ ] indicate the signal name for muting system.

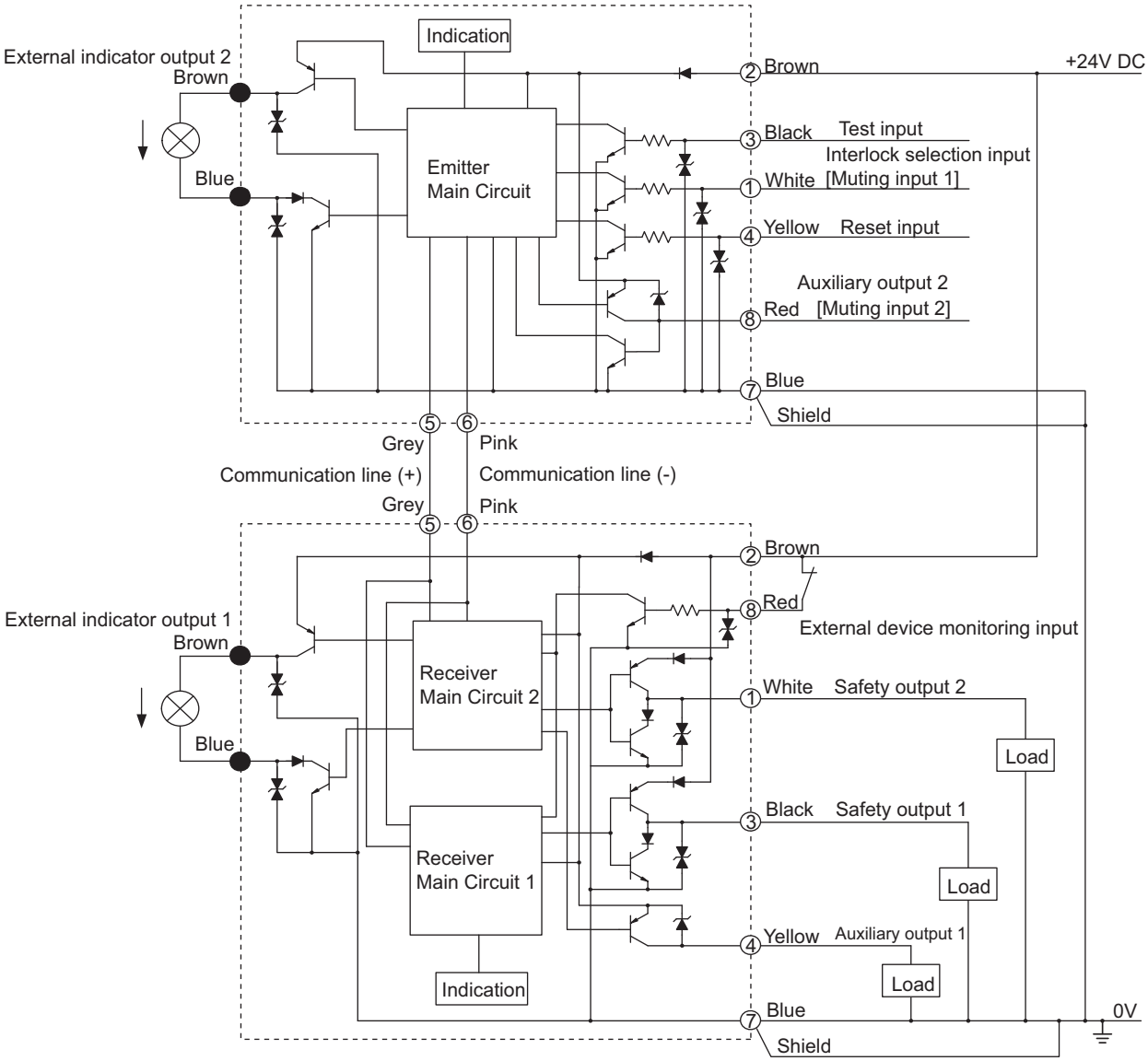

For details about wiring, see the following sections.

When not using the muting function, see p.23

When using muting function, see p.36

Wiring Examples

Some examples of a motor control system using F3SJ are shown. The examples are equivalent to ISO 13849-1 (Category 4, PLe).

Using only F3SJ

•Use of relay contact welding detection and interlock is possible without a controller or relay unit

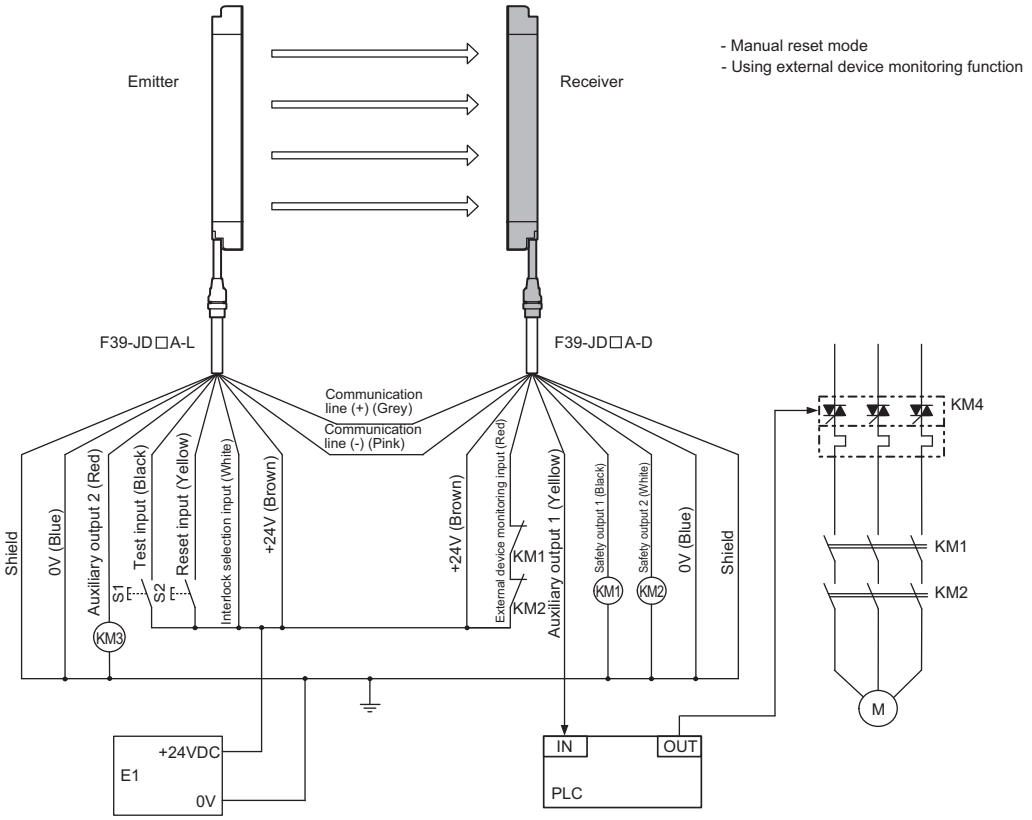

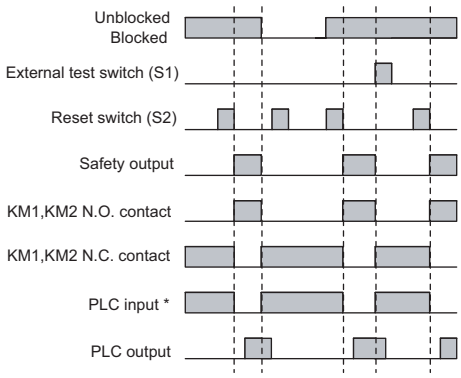

S1	:External test switch (connect to 0V if a switch is not required)
S2	:Interlock/lockout reset switch
KM1, KM2	:Safety relay with forcibly-guided contact (G7SA) or magnetic contactor
KM3	: Load or PLC (for monitoring)
KM4	:Solid state contactor (G3J)
M	:Motor
E1	:24VDC power supply (S82K)
PLC	:Programmable controller (Used for monitoring -- not related to safety system)

* Output operation mode of auxiliary output 1 is "safety output information/reverse enabled" (initial setting)

- Wiring for Auto Reset Mode p.24
- Wiring When External Device Monitoring Function Is Not Used p.24

Connecting 2 Muting Sensors

- Attaching a key cap for muting (F39-CN6) enables the muting function to be used

Attaching the key cap for muting (F39-CN6) p.32

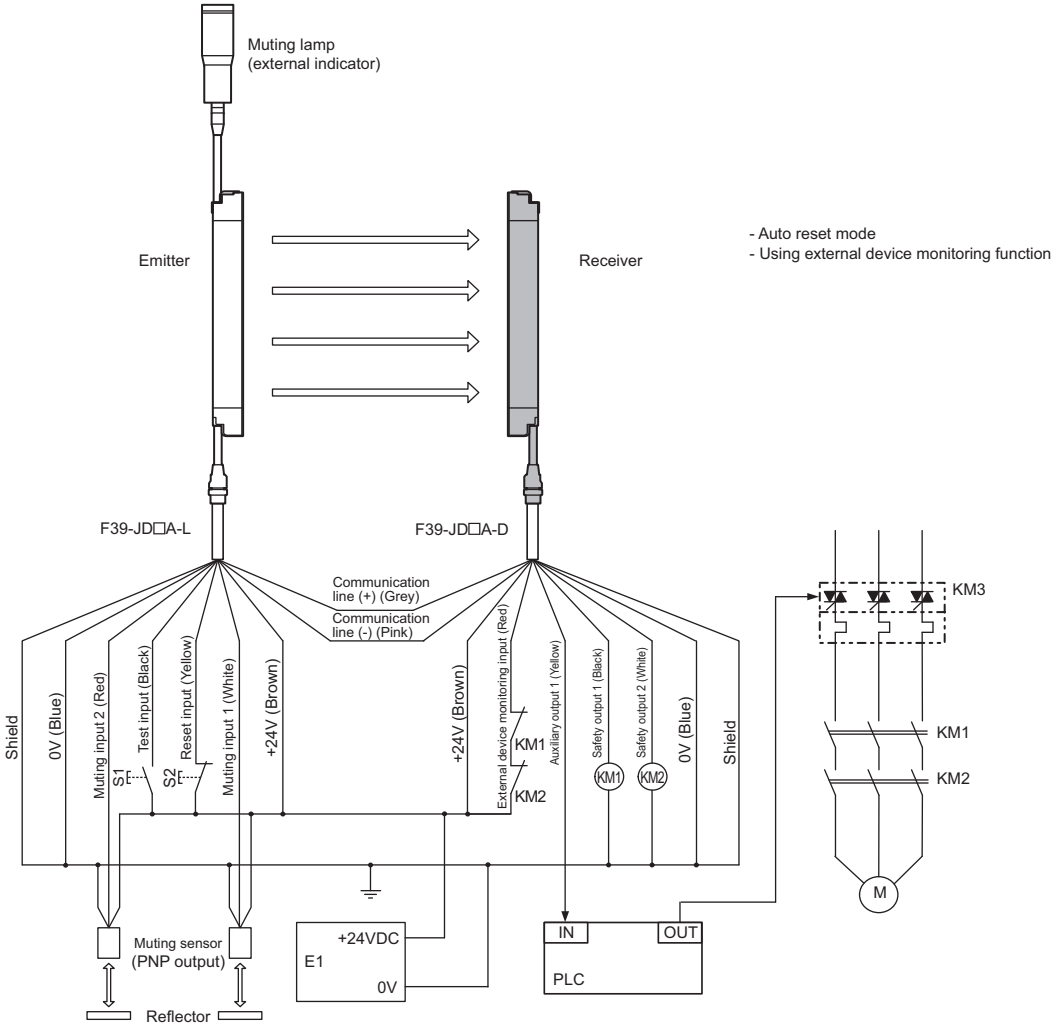

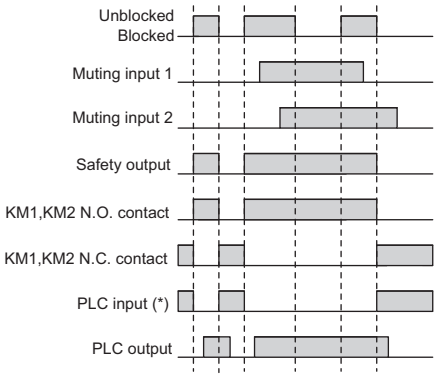

S1	:External test switch (connect to 0V if a switch is not required)
S2	:Lockout reset switch (connect to 24V if a switch is not required)
KM1, KM2	:Safety relay with forcibly-guided contact (G7SA) or magnetic contactor
KM3	:Solid state contactor (G3J)
M	:Motor
E1	:24VDC power supply (S82K)
PLC	:Programmable controller (Used for monitoring -- not related to safety system)

Muting sensor: Retro-reflective photoelectric sensor (E3Z-R81)
Two-wire type sensor cannot be used.

* Output operation mode of auxiliary output 1 is "safety output information/reverse enabled" (initial setting)

Wiring When External Device Monitoring Function Is Not Required p.37

Using the setting tool enables the use of start interlock and restart interlock.

Interlock Function p.96

Connecting 4 Muting Sensors

- Attaching a key cap for muting (F39-CN6) enables the muting function to be used

Attaching the key cap for muting (F39-CN6) p.32

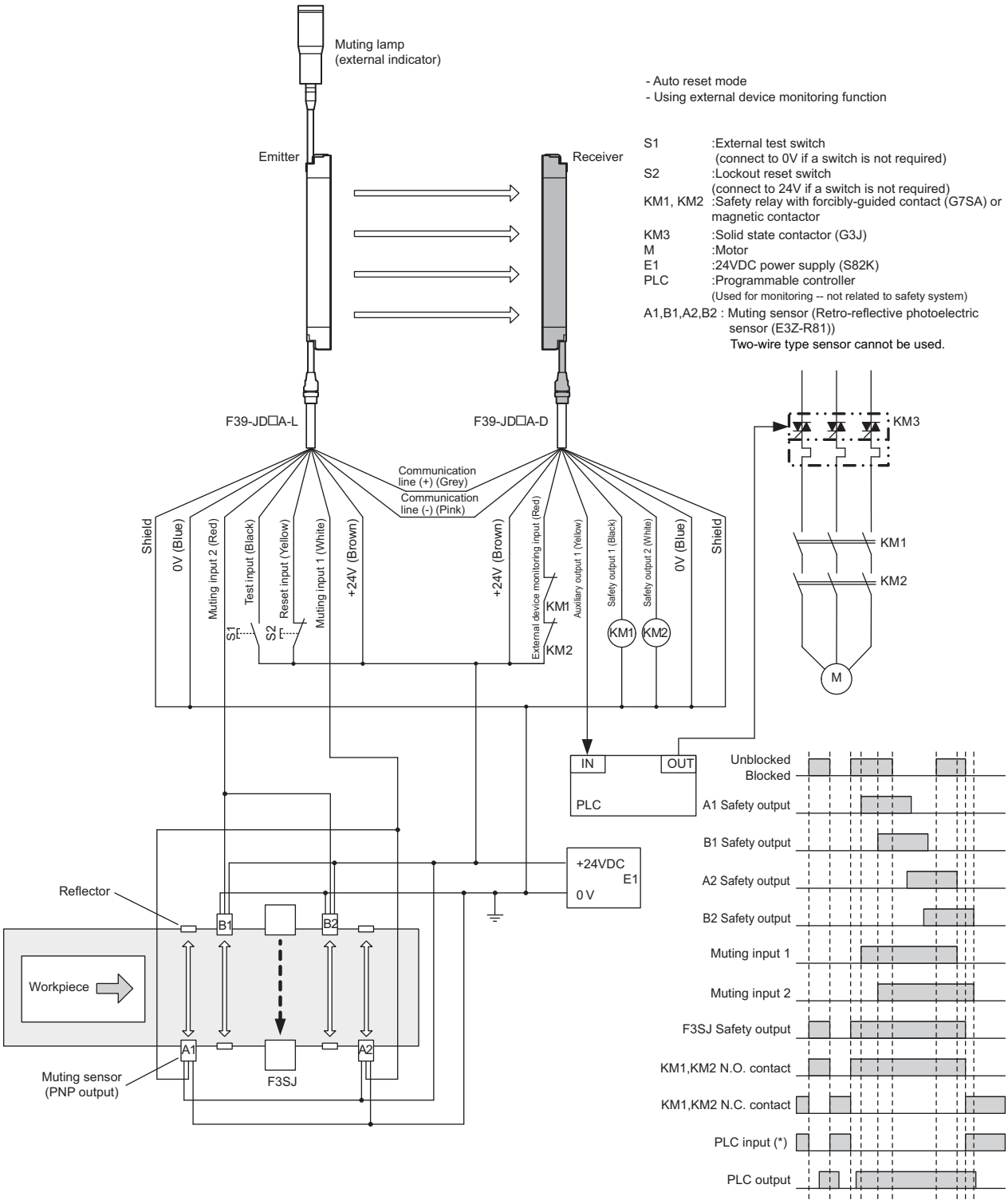

* Output operation mode of auxiliary output 1 is "safety output information/reverse enabled" (initial setting)

Wiring When External Device Monitoring Function Is Not Required p.37

Using the setting tool enables the use of start interlock and restart interlock.

Interlock Function p.96

Connecting to an F3SP-B1P

•Reduced wiring due to connector connection

•Safety relay included

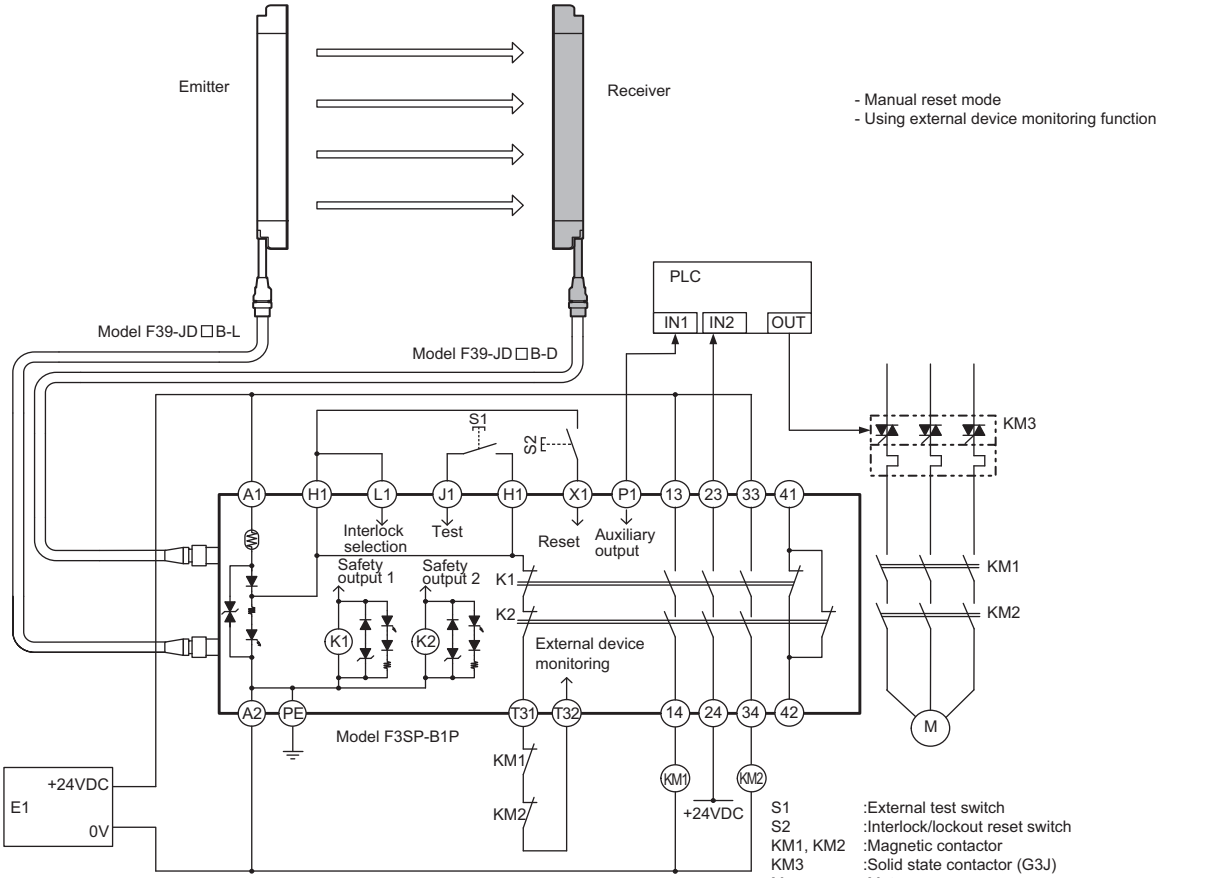

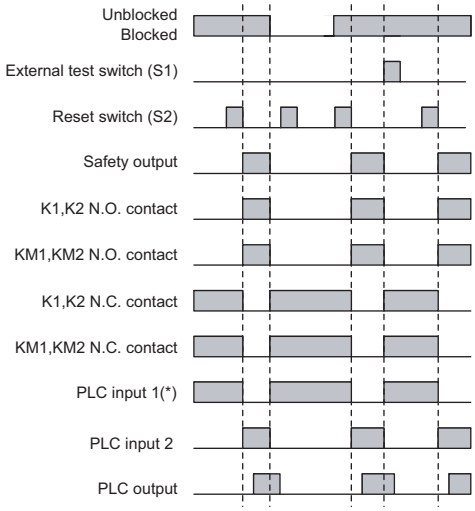

* Output operation mode of auxiliary output 1 is "safety output information/reverse enabled" (initial setting)

Wiring for auto reset mode

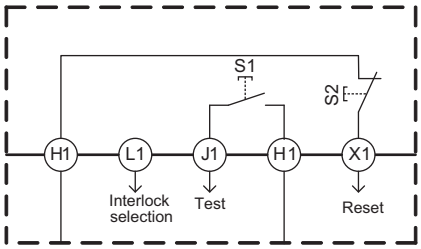

Wiring when not using external device monitoring function

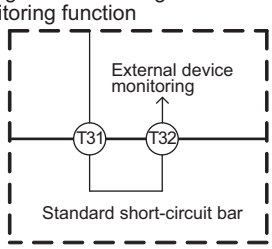

It cannot be used as a muting system when F3SP-B1P is used.

Muting System p.31

Connecting to an F3SX-E-L2R2

- Emergency stop switch can be connected
- Door switch, two hand control, single beam, or relay unit can be used in combination with F3SX
- Various settings can be changed and input/output terminals can be monitored using the setting support software for F3SX

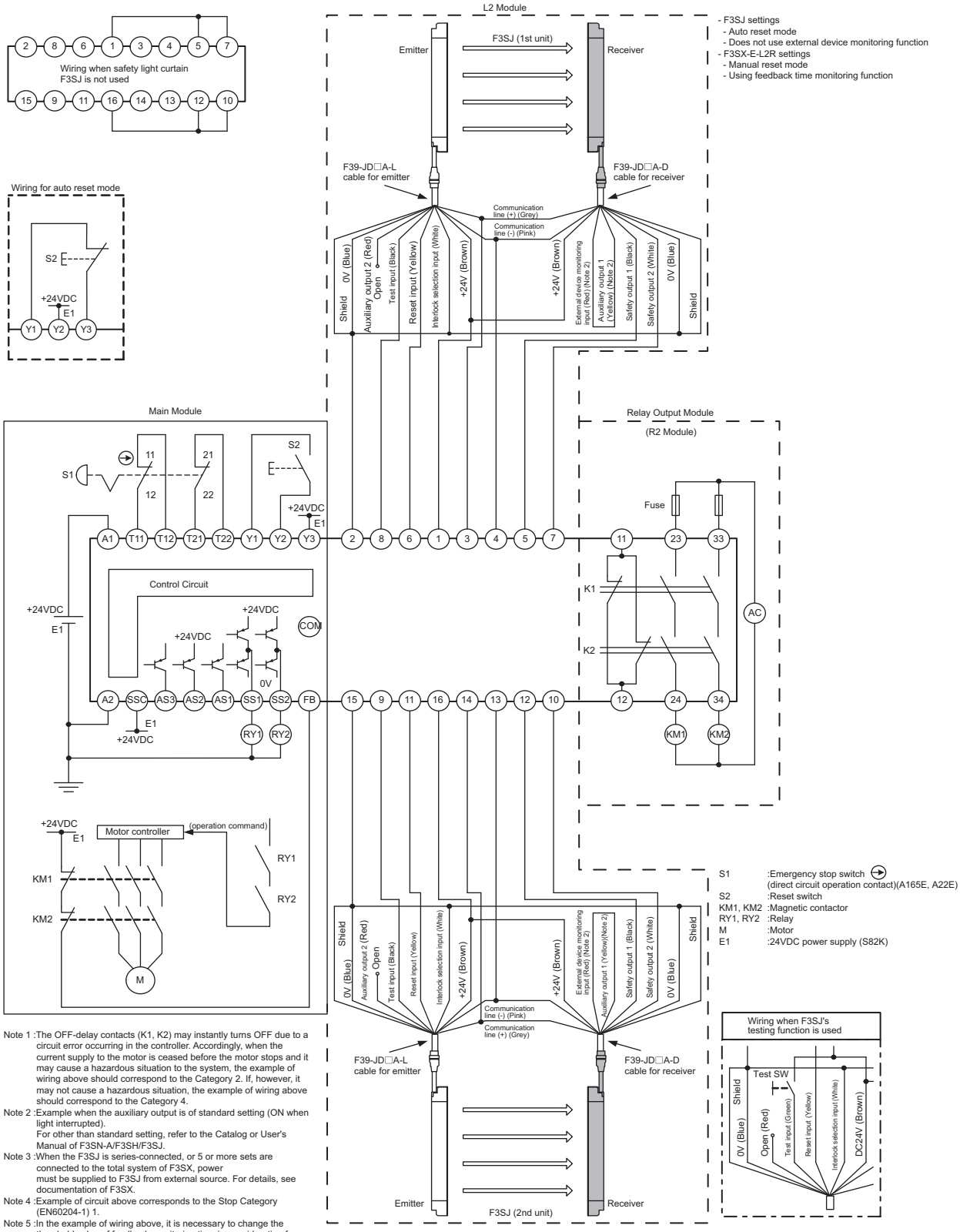

Note 1 :The OFF-delay contacts (K1, K2) may instantly turns OFF due to a circuit error occurring in the controller. Accordingly, when the current supply to the motor is ceased before the motor stops and it may cause a hazardous situation to the system, the example of wiring above should correspond to the Category 2. If, however, it may not cause a hazardous situation, the example of wiring above should correspond to the Category 4.

Note 2 :Example when the auxiliary output is of standard setting (ON when light interrupted).
For other than standard setting, refer to the Catalog or User's Manual of F3SN-A/F3SH/F3SJ.

Note 3 :When the F3SJ is series-connected, or 5 or more sets are connected to the total system of F3SX, power must be supplied to F3SJ from external source. For details, see documentation of F3SX.

Note 4 :Example of circuit above corresponds to the Stop Category (EN60204-1) 1.

Note 5 :In the example of wiring above, it is necessary to change the threshold value of feedback monitoring time in consideration for the delay time setting value by using the function set-up software for model F3SX (Model F3SX-CD□□□, sold separately).

Connecting to a G9SA-301

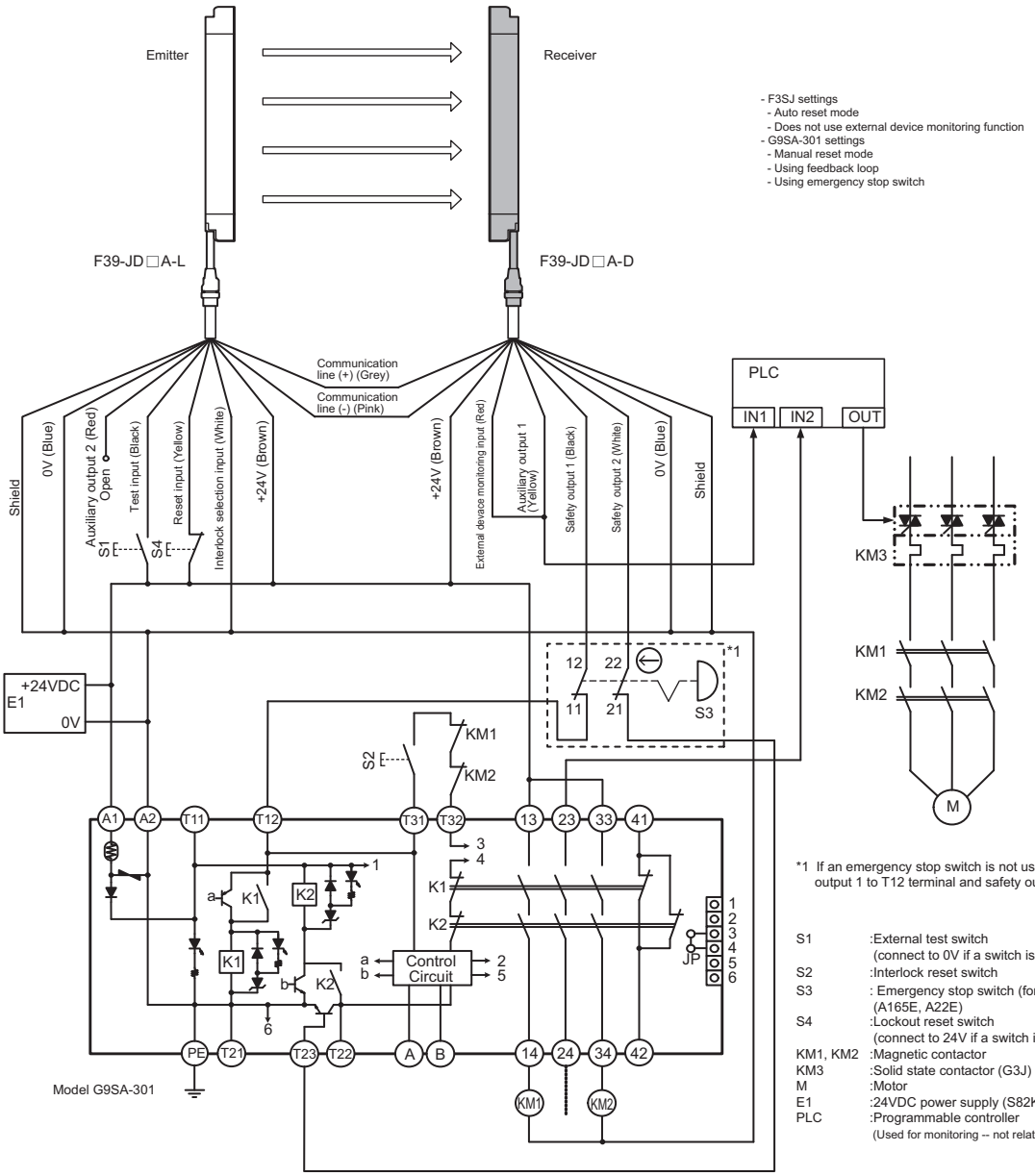

- F3SJ settings
  - Auto reset mode
  - Does not use external device monitoring function
- G9SA-301 settings
  - Manual reset mode
  - Using feedback loop
  - Using emergency stop switch

*1 If an emergency stop switch is not used, connect safety output 1 to T12 terminal and safety output 2 to T23 directly.

S1	:External test switch (connect to 0V if a switch is not required)
S2	:Interlock reset switch
S3	: Emergency stop switch (forcibly-opening contact) (A165E, A22E)
S4	:Lockout reset switch (connect to 24V if a switch is not required)
KM1, KM2	:Magnetic contactor
KM3	:Solid state contactor (G3J)
M	:Motor
E1	:24VDC power supply (S82K)
PLC	:Programmable controller (Used for monitoring -- not related to safety system)

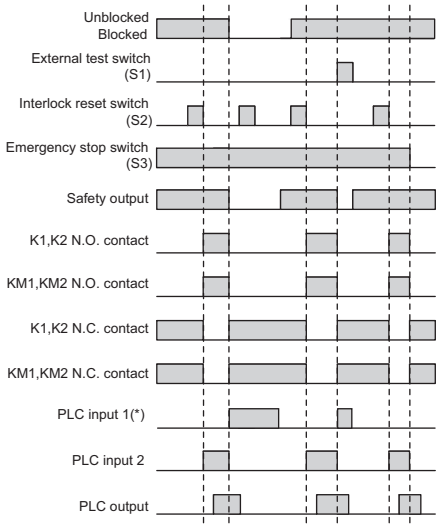

Wiring for auto reset mode

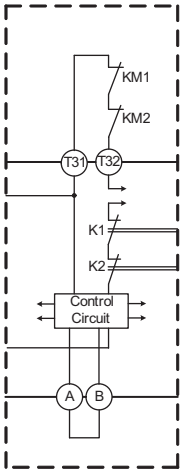

* Output operation mode of auxiliary output 1 is "safety output information/reverse enabled" (initial setting)

Connecting to a G9SA-300-SC

•Reduced wiring due to connector connection

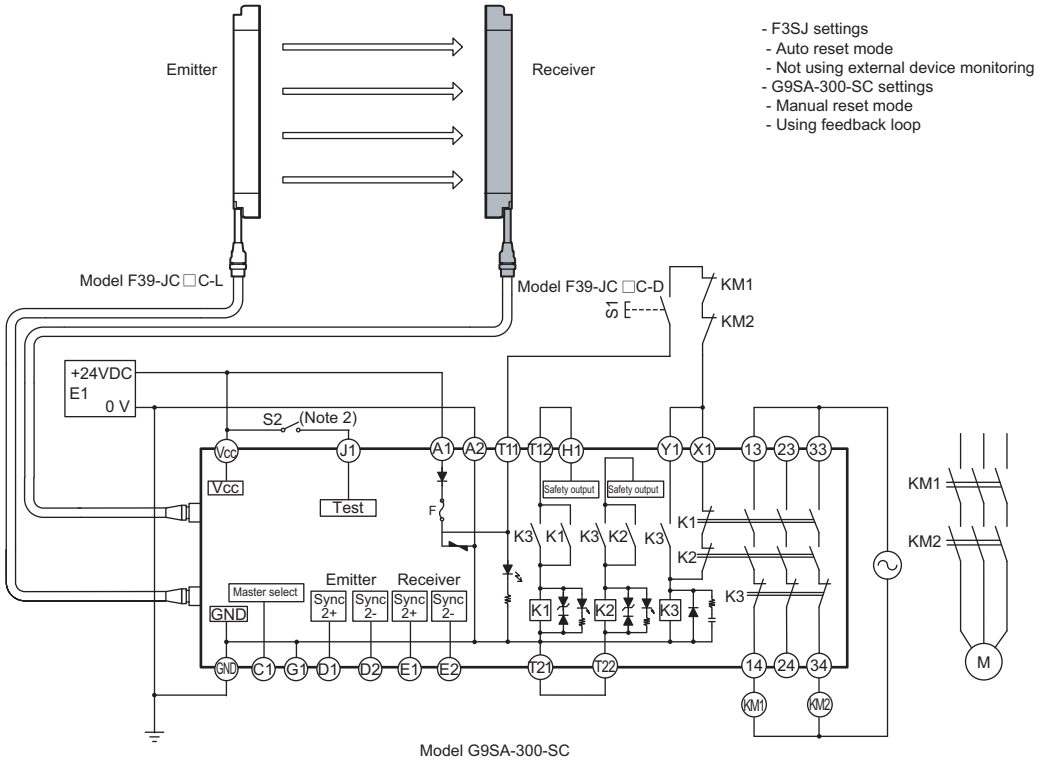

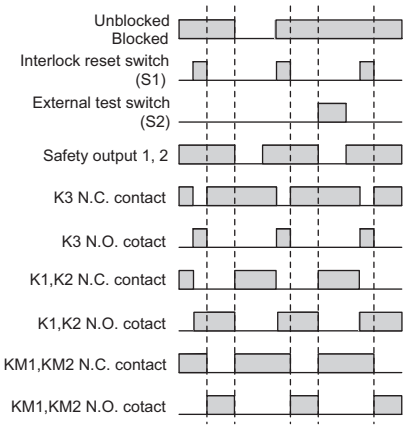

Note 1) F3SJ's external device monitoring and auxiliary output cannot be used.
Note 2) S2 performs normal operation when opened and external test when short-circuited.
Note 3) Do not connect any cable to terminals C1, D1, D2, E1, and E2

S1	:Interlock reset switch
S2	:External test switch (open between Vcc and J1 if a switch is not required)
KM1, KM2	:Magnetic contactor
M	:Motor
E1	:24V DC power supply (S82K)

Wiring for auto reset mode

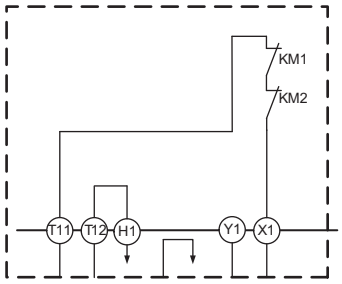

Connecting to a G9SB-301-D

•Thin (22.5mm thick)

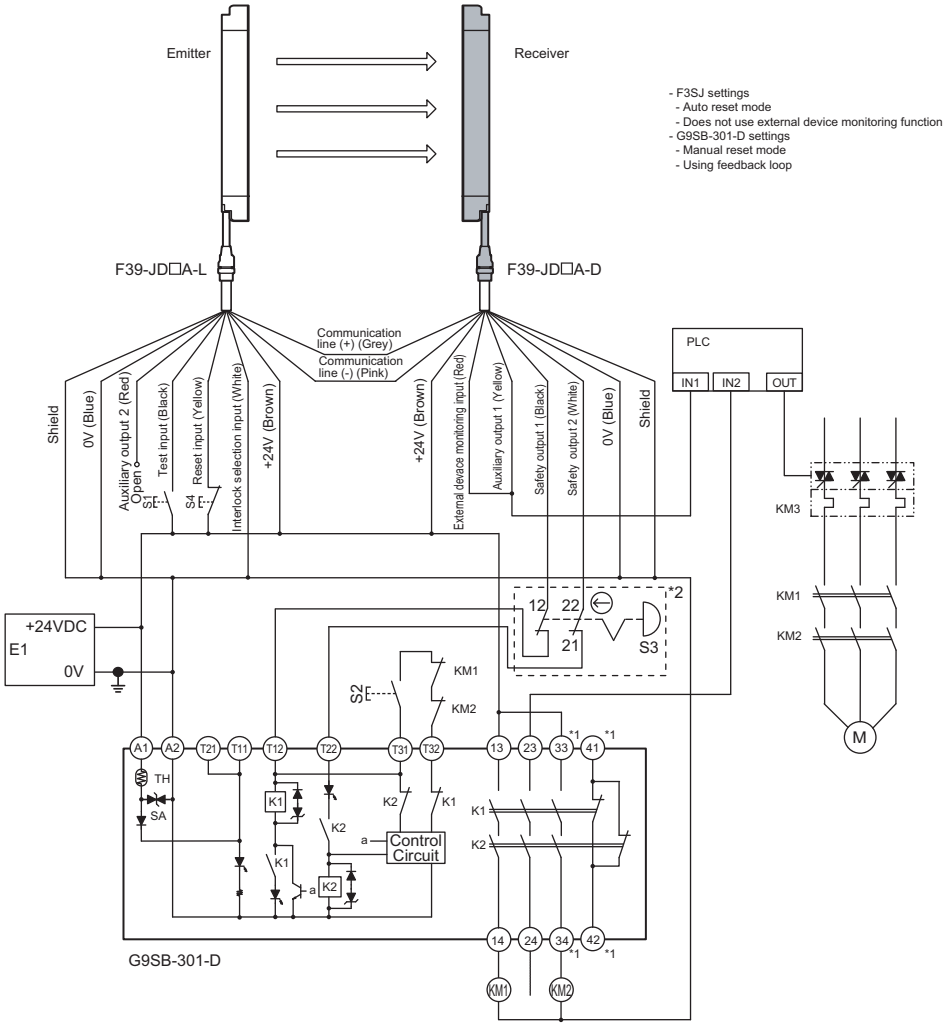

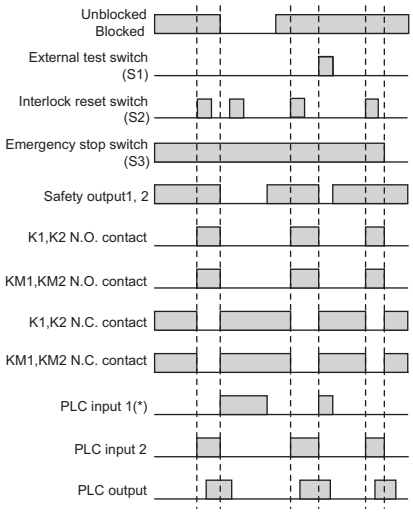

*1 The G9SB-200-D (17.5 mm thick), with no 33-34 and 41-42, is also available.
*2 If an emergency stop switch is not used, connect safety output 1 to T12 terminal and safety output 2 to T22 directly.

S1	:External test switch (connect to 0V if a switch is not required)
S2	:Interlock reset switch
S3	: Emergency stop switch (forcibly-opening contact) (A165E, A22E)
S4	:Lockout reset switch (connect to 24V if a switch is not required)
KM1, KM2	:Magnetic contactor
KM3	:Solid state contactor (G3J)
M	:Motor
E1	:24VDC power supply (S82K)
PLC	:Programmable controller (Used for monitoring -- not related to safety system)

* Output operation mode of auxiliary output 1 is "safety output information/reverse enabled" (initial setting)

CHECK!

Use G9SB-301-B for 3a+1b contact auto reset type.
Use G9SB-200-D for 2a contact manual reset type, or G9SB-200-B for 2a contact auto reset type. For details, see the catalogs.

Connecting to a G9SX-AD322-T15

•Can be configured for partial control and total control
•Can be extended to connect a door switch or a relay unit

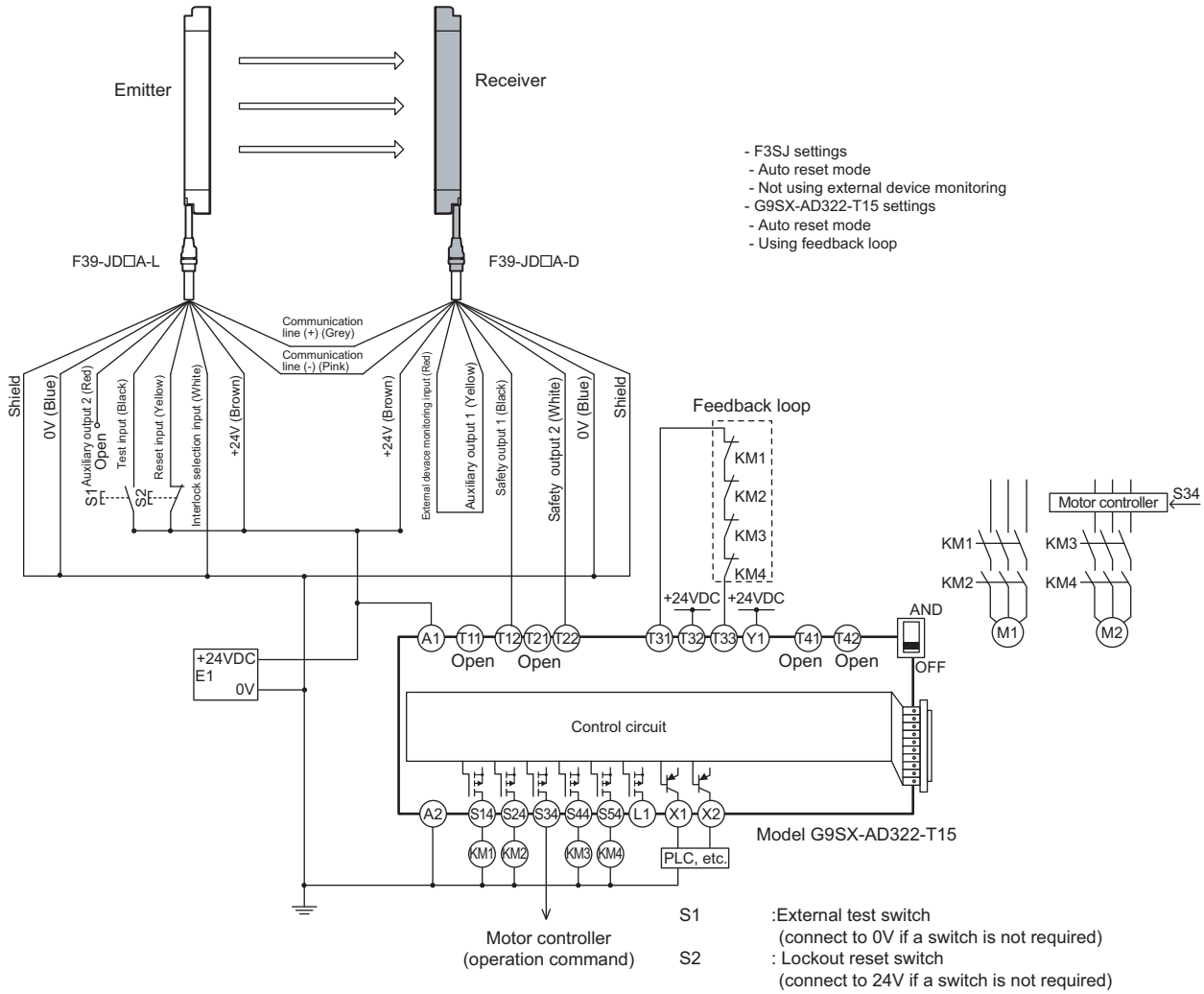

S1 :External test switch
(connect to 0V if a switch is not required)
S2 : Lockout reset switch
(connect to 24V if a switch is not required)
KM1~KM4 :Magnetic contactor
M1, M2 : Motor
E1 :24VDC power supply (S82K)
PLC :Programmable controller
(Used for monitoring -- not related to safety system)

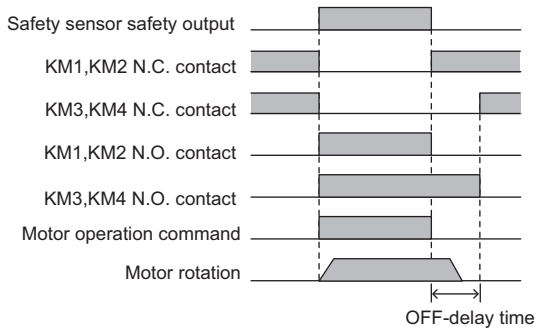

Wiring for manual reset mode

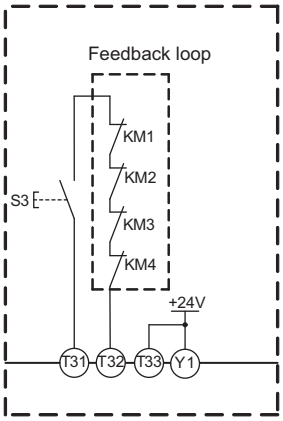

S3 : Reset switch

Using a Simple Wiring Connector

•A combination of a cable for reduced wiring (F39-JD□BA) and a simple wiring connector (F39-CN5) can be used for a reduced wiring system.

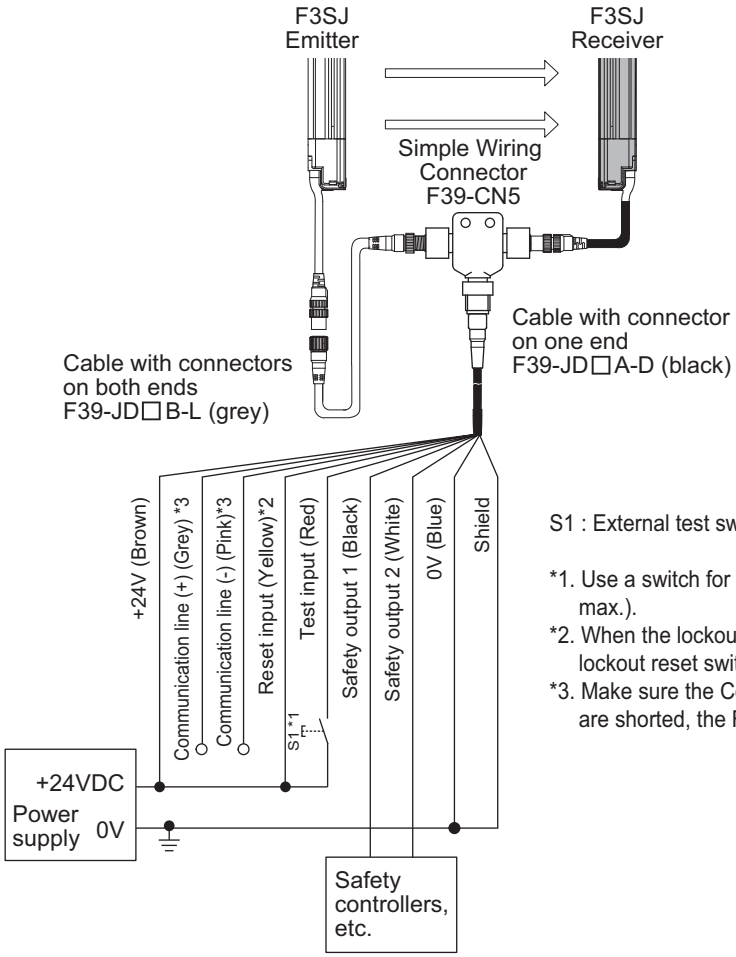

S1 : External test switch (connect 0 V if a switch is not required)

*1. Use a switch for small loads (input specifications: 24 V, 1.0 mA max.).
*2. When the lockout reset function is used, connect to 24 V via a lockout reset switch (N.C. contact).
*3. Make sure the Communication lines are insulated. If the lines are shorted, the F3SJ enters the lockout state.

Note1: When using the Simple Wiring Connector (F39-CN5), the following functions are not available.
- Manual Reset
- External Device Monitoring
- Auxiliary Outputs 1, 2
- Muting/Override

When using the setting tools, make sure to keep the settings in the factory default.

Note2: F39-JD□B-L is connected to the emitter by the above picture, but even if F39-JD□B-L is connected to the receiver, F3SJ operates.

An example of a control unit connectable to F3SJ

Safety Controller	Model
Safety Network Controller	NE1A Series
Safety Controller	G9SP Series
Flexible Safety Unit	G9SX
Safety Guard Switching Unit	G9SX-GS
Safety Relay Unit	G9SA Series/ G9SB Series
Control Unit	F3SP-B1P

Chapter6 Checklists

Pre-Operation Checklists	178
Maintenance Checklists	181

Pre-Operation Checklists

⚠ WARNING

Make sure to test the operation of the F3SJ after installation to verify that the F3SJ operates as intended. Make sure to stop the machine until the test is complete. Unintended function settings may cause a person to go undetected, resulting in serious injury.

After installation, the highest level administrator must use the following checklist to verify the operation, placing a check mark in each of the boxes.

Checklists

■ Installation Condition Check

☐The machine itself does not prevent the operation of safety functions such as stopping.
☐The hazardous part of a machine cannot be reached without passing through the detection zone of the F3SJ.
☐The system is configured so that the F3SJ can always detect a worker who is working in the hazardous zone.
☐The interlock reset switch is installed in a location that provides a clear view of the entire hazardous zone and it cannot be activated from within the hazardous zone.
☐Safety distance has been calculated. Calculated distance: S = ( )mm
☐Safety distance has been calculated with larger detection capability when floating blanking is used. Calculated distance: S = ( )mm
☐The actual distance is equal to or greater than the calculated distance. Actual distance = ( )mm
☐Reflective surfaces are not installed in prohibited zones.
☐Not installed in a reflective configuration.
☐When muting function is used, a muting sensor must be installed so that muting state should not occur when a human body enters a detection zone of F3SJ by mistake.
☐When muting function is used, a muting sensor must be installed so that muting state should not occur when a human body enters a hazardous zone of a machine.
☐When muting function is used, muting state can be checked from where a worker operates or adjust the machine.
☐A muting sensor consists of 2 independent devices.
☐It is not used in flammable or explosive atmosphere.

■ Wiring Check Before Power Is Turned ON

☐When the power supply unit is connected to multiple devices, the power supply unit must have tolerance against total rated current of the devices.
☐The power supply unit is a 24 VDC unit that conforms to the EMC Directive, Low-voltage Directive, and output holding specifications.
☐The power supply polarity is not connected in reverse.
☐Emitter/receiver cables are properly connected to the respective emitters/receivers.
☐Double insulation is used between I/O lines and the hazard potential (commercial power supplies, etc.).
☐Outputs are not short-circuited to +24V line.
☐Loads are not connected to the +24V line.
☐All lines are not connected to commercial power source.
☐F3SJ's power supply connector and series connection connector must not be attached upside down.
☐Model of emitter and receiver must be the same.
☐When 2 or more sets of F3SJ are used, series connection is made or mutual interference prevention measures are taken.
☐When 2 or more sets of F3SJs are used in series connection, PNP output type and NPN output type must not be connected.

☐A secondary sensor farthest from its power supply has either of the followings:
- Cap
- Key cap for muting
- Muting lamp (set of lamp and cable)

☐Neither connector, cap, or bracket must be loose.
☐Auxiliary outputs 1 and 2, and external indicator outputs 1 and 2 must not be used as safety output.
☐Power supply's 0V must be grounded.
☐Wiring must not be bent, cracked, nor damaged.

■ Operation Check While the Machine Is Stopped

☐The test rod is not deformed.
Depending on the unit's model and settings of floating blanking function, detection capability may vary. Use a test rod with an appropriate diameter for inspection.

☐The sensor can detect a test rod wherever it is in the detection zone. In other words, when a test rod is inserted into the detection zone, all 5 incident light level indicators turn OFF, and the OFF-state indicator turns ON.
When fixed blanking function is used, you must ensure that all blanked zones in the detection zone are covered by construction and that there should be no zone that cannot detect the test rod in the detection zone.
To check detection, move the test rod as shown in the diagram below.

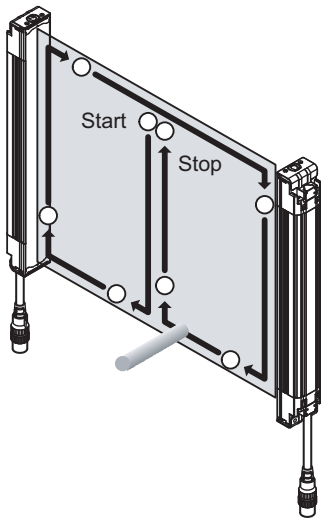

☐When the external test function is used:
The OFF-state indicator turns ON when the test input line is short-circuited to 9 to 24V.

☐When the external device monitoring function is used:
When the F3SJ is blocked and the external device monitoring input terminal is open, it enters a lockout state.

☐When the start interlock function is used:
After the F3SJ is turned ON, the OFF-state indicator remains turned ON, even if the F3SJ is receiving light. The reset switch input turns ON the ON-state indicator.

☐When the restart interlock function is used:
While the ON-state indicator is ON, the OFF-state indicator remains turned ON, even when the F3SJ is blocked and then receives light again. The reset switch input turns ON the ON-state indicator.

☐When muting function is used, minimum muting time limit required must be set.

☐When muting function's operation mode is exit only muting mode, minimum muting waiting time required must be set.

☐Under muting state, a signal that indicates muting state must be output from either of the followings:
- External Indicator 1 or 2
- Auxiliary Output 1

☐When override function is used, minimum override time limit required must be set.

☐Under override state, a signal that indicates override state must be output from either of the followings:
- External Indicator 1 or 2
- Auxiliary Output 1

■ Checking that Hazardous Parts Stop While the Machine Operates

☐The hazardous parts stop immediately when a test rod is inserted into the detection zone at 3 positions: "directly in front of the emitter", "directly in front of the receiver", and "between the emitter and receiver". (Use the appropriate test rod.)
☐The hazardous parts remain stopped as long as the test rod is in the detection zone.
☐The hazardous parts stop when the power of the F3SJ is turned OFF.
☐The actual response time of the whole machine is equal to or less than the calculated value.

Maintenance Checklists

⚠ WARNING

Perform daily and 6-month inspection for the F3SJ. Otherwise, the system may fail to work properly, resulting in serious injury.

Do not try to disassemble, repair, or modify this product. Doing so may cause the safety functions to stop working properly.

To ensure safety, keep a record of the inspection results.
When the user is a different person from those who installed or designed the system, he/she must be properly trained for maintenance.

Checklists

■ Inspection at Startup and When Changing Operators

☐There is no approach route other than through the detection zone of the F3SJ.
☐Part of the operator's body always remains in the detection zone of the F3SJ when working around the machine's hazardous part.
☐The actual safety distance is equal to or greater than the calculated value.
☐There must be no dirt on or damage to the optical surface, spatter protection cover (F39-HJ, sold separately), or environment-resistant casing (F39-EJ, sold separately) of the F3SJ.
☐OFF output indicator must be turned ON when test input line is short-circuited to 9 to 24V.
☐When muting function is used, a muting lamp must be clear and free of dirt or degradation.
☐The test rod is not deformed.
☐When the start interlock function is used:
After the F3SJ is turned ON, the OFF output indicator must remain turned ON, even if the F3SJ is receiving light. The reset switch input must turn ON the ON output indicator.
☐When the restart interlock function is used:
While the ON output indicator is ON, the OFF output indicator must remain turned ON, even when the F3SJ is blocked and then receives light again. The reset switch input must turn ON the ON output indicator.
☐When the power of the F3SJ is turned ON while nothing is in the detection zone, it must operate as follows:
If start interlock is not used: Power indicator and ON output indicator must turn ON within 2 seconds (2.2 seconds in case of series connection).
If start interlock is used: Power indicator and OFF output indicator must turn ON within 2 seconds (2.2 seconds in case of series connection).
☐Nothing should exist in the detection zone and 5 incident light level indicators must turn ON at power on.

☐The test rod is detected when it is moved around in the detection zone as shown in the diagram below. In other words, when a test rod is inserted into the detection zone, all 5 incident light level indicators turn OFF, and the OFF output indicator turns ON.
Use an appropriate test rod based on the type code and floating blanking function for inspection.

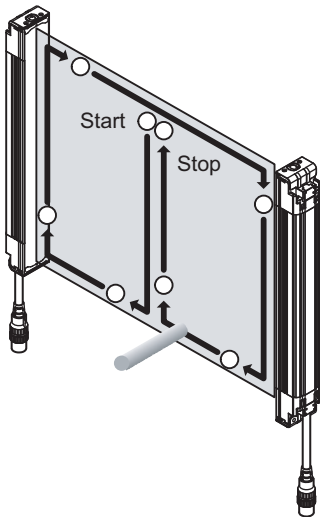

☐When muting function is used, installation condition of muting sensor must not be changed.
☐When muting function is used, muting status can be checked from where a worker operates or adjust the machine.
☐Neither connector, cap, or bracket must be loose.

■ Checking that Hazardous Parts Stop While the Machine Operates

☐The hazardous parts are movable when nothing is in the detection zone.
☐The hazardous parts stop immediately when a test rod is inserted into the detection zone at 3 positions: "directly in front of the emitter", "directly in front of the receiver", and "between the emitter and receiver". (Use the appropriate test rod.)
☐The hazardous parts remain stopped as long as the test rod is in the detection zone.
☐The hazardous parts stop when the power of the F3SJ is turned OFF while nothing is in the detection zone.

■ Items to Inspect Every 6 Months or When Machine Settings Are Changed

In addition to inspection item at operation start, following items must also be verified.

☐The outputs of the F3SJ and the machine are properly wired.
☐The total number of times that the control relays/contactors have switched is significantly lower than their design lives.
☐There is no disturbance light.
☐Safety distance has been calculated with changed detection capability when floating blanking is changed.
Calculated distance: S = ( )mm
☐When muting function setting is changed, a muting sensor must be installed so that muting state should not occur when a human body enters a detection zone of F3SJ by mistake.
☐When muting function setting is changed, a muting sensor must be installed so that muting state should not occur when a human body enters a hazardous zone of a machine.
☐When muting function setting is changed, a muting sensor must consist of 2 independent devices.
☐When F3SJ is connected again, a secondary sensor farthest from its power supply has either of the followings:
- Cap
- Key cap for muting
- Muting lamp (set of lamp and cable)
☐Power supply's 0V must be grounded.
☐Wiring must not be bent, cracked, nor damaged.

Chapter7 Appendix

Troubleshooting	184
Accessories (Sold Separately)	193
Glossary	201
Related Standards	205
Revision History	207

Troubleshooting

Lockout State

If F3SJ detects any failure, it keeps safety output OFF and transitions to lockout state. Under lockout state, an emitter and a receiver set interlock indicator and OFF indicator blinking respectively, and F3SJ that detected the failure sets an error mode indicator ON or blinking based on the failure. Solve the problems based on the table below.*1
Eliminate the cause of the problem. Then turn the power on again or provide the reset input*2 to restart the F3SJ.

*1. If communication error is indicated on primary sensor's receiver, it may be caused by other F3SJ (emitter or secondary sensor). If a connector was disconnected before, especially in series connection, ensure that connection should not be loose and that internal connector pins should not be bent.
*2. In some conditions of communication between the emitter and receiver, the reset input may not restart the F3SJ.

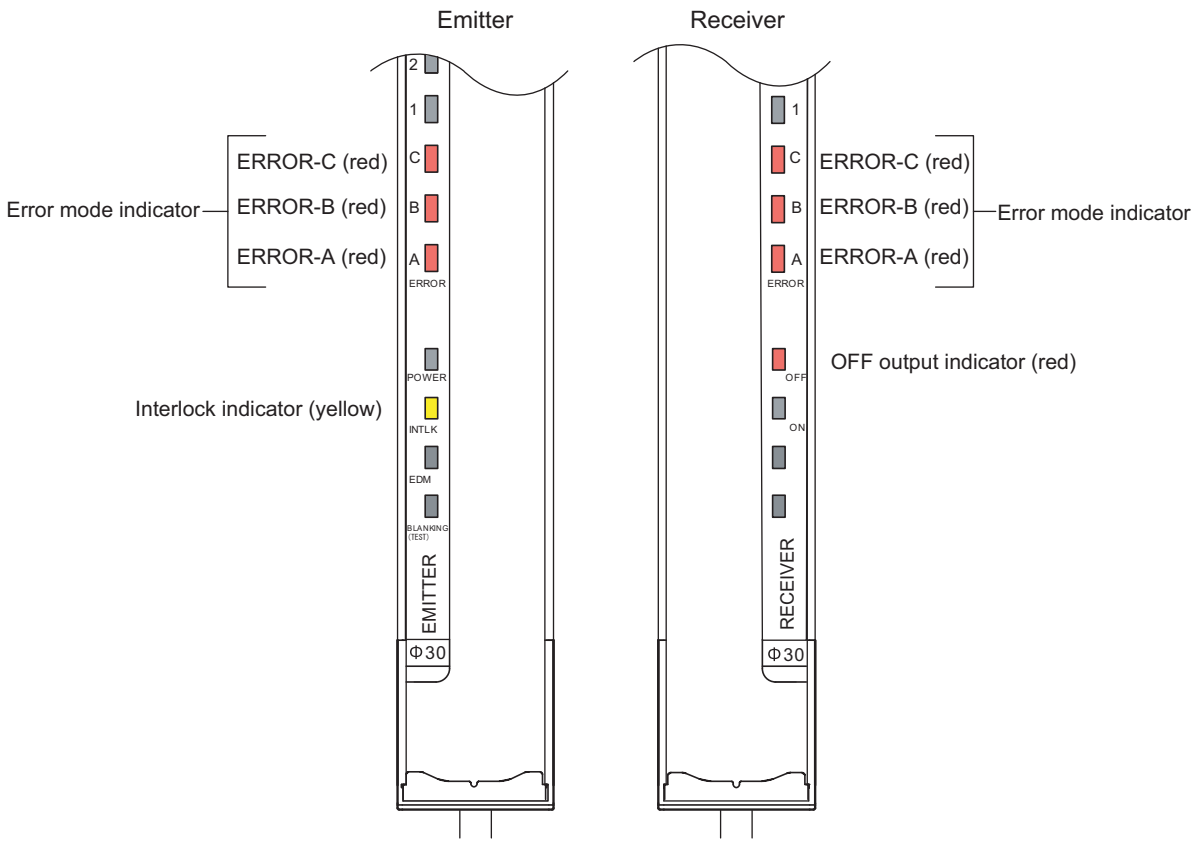

For other combinations of indication statuses of the error mode indicators on the emitter and receiver than in the table below, refer to the indication status information of the emitter and receiver, respectively in the table.

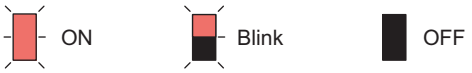

Emitter	Receiver	Error code	Error Description	Cause	Solution
C B A	C B A	10, 11	Mutual interference error	Disturbance light is received.	Block the disturbance light. p.118
				The receiver is receiving light emitted from another photoelectric switch or F3SJ.	See Chapter 4 "Mutual Interference Prevention". p.117
C B A	C B A	19 *	Power supply capacity error	Power supply voltage is outside the rated range.	Connect to a 24VDC± 20% power supply voltage.
				Voltage fluctuation due to insufficient power supply capacity.	Replace the power supply with one that has a larger capacity.
				Instantaneous break or instantaneous stop due to power sharing with other devices.	Do not share the power supply with other devices, and connect to a power supply that is dedicated to devices for electrical-detection protective functions, such as the F3SJ, safety controller, muting sensor, etc.
C B A	C B A	20	Blanking monitoring error	A fixed blanking beam other than allowable beams received light.	Adjust a position of the device so that a fixed blanking beam other than allowable beam should not receiver light. Or, configure fixed blanking setting again. p.62
				Number of interrupted beams is less than (number of floating blanking beams - number of allowable beams).	Set number of floating blanking beams and number of allowable beams based on a size of interrupting object. p.66
C B A	C B A	30, 31, 32, 37, 39	Communication error	The communication line or other wiring is broken or short-circuited.	Check the wiring and cables.
				Communication error due to noise.	Check the noise level in the environment around the communication line. The inductive noise tends to be induced especially if the signal line and the power line are arranged in parallel. Be sure to lay the power line away from the signal line.
				If the wiring is extended without using the exclusive cord (F39-JD□□), no cord with the same performance or more than the exclusive cord is used.	Use a cord (twisted-pair cable) with the same performance or more than the exclusive cord (F39-JD□□). Otherwise connect the shield to the 0V line.
				After eliminating the cause of the problem, power cycle the F3SJ.	

Emitter	Receiver	Error code	Error Description	Cause	Solution
				A power cable or series connection cable connector is detached. If not, a contact failure due to the loose connector, the intrusion of liquid (oil etc.) into the connector, or the attachment of a foreign material has occurred.	Check connectors of power cable and series-connection cables. After cleaning the inside of the cap (if any foreign material is attached), tighten the cap more closely. Replace the cap if any liquid such as oil has intruded.
				Temporary power supply voltage reduction in motion.	Check for temporary power supply voltage reduction (by about 12VDC) by the influence of the induction load etc. If the exclusive power supply is not used, check the power consumption of other connected devices for enough capacity.
				Connection positions are reversed for emitter(s) and receiver(s) under series connection.	Correct connection positions of all F3SJ's emitters and receivers.
				Failure of F3SJ's internal circuit.	Replace the F3SJ.
				The setting tool is connected to series connection that includes F3SJ of version 1.	The setting tool cannot be used if the connection includes F3SJ of version 1. Do not connect F3SJ of version 1.
C B A	C B A	38	Lockout of other sensor than the primary receiver (error mode indicator will not turn on)	A sensor other than the primary receiver is in lockout when series-connected.	Solve the problem of an emitter or F3SJ in a series connection.
C B A	C B A	3A	Excessive number of beams	Total number of beams of F3SJs under series connection exceeds 400.	Rearrange series connection so that total number of beams of series connection should not exceed 400.
		3B	Excessive number of connected sensors	Five or more sensors are connected.	Number of F3SJs under series connection must be 4 or less.
		3C	Model error (between series connection)	Models of the primary sensor and secondary sensor are unavailable for connection. (Primary: PNP Output, Secondary: NPN Output, etc.)	Connect them properly. p.120
		3D	Model error (between emitter/ receiver)	Models are different between an emitter and a receiver (lengths, output types, or beam gaps are different)	
		3E	Sensor count error (no emitter)	Number of emitters under series connection is less than that of receivers (emitters: 3, receivers: 4, etc.)	
		3F	Sensor count error (no receiver)	Number of receivers under series connection is less than that of receivers (emitters: 4, receivers: 3, etc.)	

Emitter	Receiver	Error code	Error Description	Cause	Solution
C B A	C B A	40	Setting value error	Function setting value configured by the setting tool is out of valid range.	Perform setting recovery to restore factory settings. p.105
				Muting enabling keycap is attached but muting/override information is not assigned to either of auxiliary output 1, external indicator output 1 or 2.	To use muting function, muting/override information must be assigned to at least one of auxiliary output 1, external indicator output 1 or 2. p.91
C B A	C B A	4E	Cap position error	Failure of F3SJ's internal circuit.	Replace the F3SJ.
		4F	Cap error	Cap is not attached.	Attach the cap properly.
				A contact failure due to the loose cap, the intrusion of liquid (oil etc.) into the cap, or the attachment of a foreign material has occurred.	After cleaning the inside of the cap (if any foreign material is attached), tighten the cap more closely. Replace the cap if any liquid such as oil has intruded.
C B A	C B A	50, 51, 52, 53	External device monitoring error	Relay is welded.	Replace the relay.
				The relay and external device monitoring input line are not properly wired.	Check the wiring for the relay.
				The relay response time exceeds the allowable delay time.	Replace the relay with one that has an appropriate response time. Or, change the device monitoring time by the setting tool. p.98
				If short-circuit is made to an auxiliary output instead of a relay, the auxiliary output line is broken or short-circuited.	Make sure there is no failure in the external device monitoring input and auxiliary output lines. Or, use the setting tool to set output mode of auxiliary output 1 to safety output information and enable reverse output mode. (factory shipment setting). p.91
				Emitter(s) and receiver(s) are reversely connected when connected to connector type controller. (Connectors of F3SP-B1P's emitter/receiver are reversely attached, etc.)	Check connectors' positions.

Emitter	Receiver	Error code	Error Description	Cause	Solution
C B A	C B A	5B	Failure of interlock selection input line	The interlock selection input line is broken or short-circuited.	Check wiring of interlock selection input line.
		5E	Interlock wiring error	The reset input line and interlock selection input line are not properly wired.	Check that wiring has been made for auto reset or manual reset. p.23, p.24
				Connection positions are reversed for emitter(s) and receiver(s).	Correct connection positions and directions of all F3SJs. p.122
				Connection direction is upside down for emitter(s).	
				Emitter(s) and receiver(s) are reversely connected when connected to connector type controller. (Connectors of F3SP-B1P's emitter/receiver are reversely attached, etc.)	Check connectors' positions.
				A contact failure due to the loose connector, the intrusion of liquid (oil etc.) into the connector, or the attachment of a foreign material has occurred.	After cleaning the inside of the connector (if any foreign material is attached), tighten the connector more closely.
				After eliminating the cause of the problem, power cycle the F3SJ.	
C B A	C B A	5D	Muting wiring error	The reset input line is not properly wired when muting enabling keycap is attached.	Wire the reset input line properly. p.36
				After eliminating the cause of the problem, power cycle the F3SJ.	
C B A	C B A	60, 61, 62, 63, 64, 65	Safety output error (1)	Safety output lines are short-circuited to each other at power on.	Wire the output lines properly. Check the safety output is in contact with other lines at the device or the connection.
				Safety output line and 24V, 0V, or other input/output line are short-circuited at power on.	
				Temporary power supply voltage reduction in motion.	Check for temporary power supply voltage reduction (by about 12VDC) by the influence of the induction load etc. If the exclusive power supply is not used, check the power consumption of other connected devices for enough capacity.

Emitter	Receiver	Error code	Error Description	Cause	Solution
				Effect of noise is excessive.	If other devices using the same power supply generate noise, do not share the same power supply with other devices and use it as that exclusive for the safety component. The inductive noise tends to be induced especially if the power line and the power supply line are arranged in parallel. Arrange the exclusive power supply near the light curtain or lay the power line away from the power line. If the power supply for operation is located near the power supply and it uses the same ground, it is subject to the influence of common mode noise from the ground. Separate the grounding point or use it as the exclusive ground.
				Failure of safety output circuit.	Replace the receiver.
				Connection positions are reversed for emitter(s) and receiver(s), or their directions are upside down.	Correct connection positions and directions of all F3SJs. p.122
			Series connection cable error (1)	Safety output error occurred due to short circuit, breakage, or disconnection of series connection cables.	Check if series connection cables are connected properly. Replace a series connection cable if it is broken.
	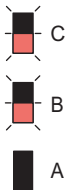	66, 67, 68, 69	Safety output error (2)	Safety output lines are short-circuited to each other after power on.	Wire the output lines properly. Check the safety output is in contact with other lines at the device or the connection.
				Safety output line and 24V, 0V, or other input/output line are short-circuited after power on.	
			Series connection cable error (2)	Safety output error occurred due to short circuit, breakage, or disconnection of series connection cables.	Check if series connection cables are connected properly. Replace a series connection cable if it is broken.
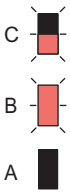	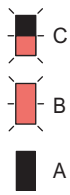	70	External indicator output error	The external indicator output and 24V, 0V, or other input/output line are short-circuited when diagnosis function of an external indicator output is being enabled. Or, an external indicator output line is broken.	Perform the proper wiring.
				Load (such as indicator or relay) connected to an external indicator output is broken.	Replace the load.
				Failure of external indicator circuit.	Replace the F3SJ.

Emitter	Receiver	Error code	Error Description	Cause	Solution
	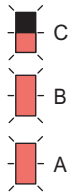	71	Auxiliary output 1 error	The auxiliary output line and 24V, 0V, or other input/output line than external device monitoring input line are short-circuited when diagnosis function of an auxiliary output 1 is being enabled. Or, an auxiliary output line is broken.	Perform the proper wiring for auxiliary output 1.
				Load (such as indicator or relay) connected to an auxiliary output 1 is broken.	Replace the load.
				Failure of auxiliary output 1 circuit.	Replace the F3SJ.
		80	Series connection cable error (3)	Series connection cable is broken. (Test input line of a series connection cable is broken)	Replace the series connection cable.
				A contact failure due to the loose connector, the intrusion of liquid (oil etc.) into the connector, or the attachment of a foreign material has occurred.	After cleaning the inside of the connector (if any foreign material is attached), tighten the connector more closely.
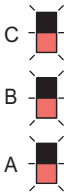	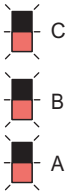	Error code other than those above	Effect of noise.	Effect of noise is excessive.	If other devices using the same power supply generate noise, do not share the same power supply with other devices and use it as that exclusive for the safety component. The inductive noise tends to be induced especially if the power line and the power supply line are arranged in parallel. Arrange the exclusive power supply near the light curtain or lay the power line away from the power line. If the power supply for operation is located near the power supply and it uses the same ground, it is subject to the influence of common mode noise from the ground. Separate the grounding point or use it as the exclusive ground.
			Lockout of other F3SJ in the series connection	Failure occurred in another F3SJ under series connection.	Solve the problem of F3SJ in a series connection.
			Failure of F3SJ's internal circuit.	F3SJ's internal circuit is damaged.	Replace the F3SJ.
			After eliminating the cause of the problem, power cycle the F3SJ.		

* When an error occurred, a supply voltage error may be recorded in addition to the original error code if supply voltage is out of specification range.

Problem under other state than lockout

Shown below are actions to take when F3SJ does not work properly while no lockout occurred or no error code is displayed.

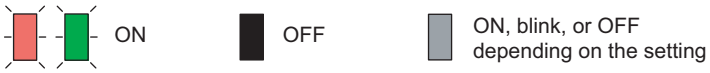

•Light intensity level indicators do not turn ON even if a beam receives light, while only the power indicator and OFF output indicator are being turned ON

Emitter	Receiver	Cause	Action
		Beam is misaligned.	Adjust the beam so that it should receive light. A beam will not receive light if its installation surface is tilted or its height is misaligned. If the beam still does not receive light after adjustment, detach the F3SJ from installation surface, set an emitter and a receiver face to face, and check if the beam receives light. p.156
		Operating range is too short.	Use the setting tool to configure longer operating range. p.99
		Test input is being applied.	Check if the test indicator is blinking. If it is blinking, set the test input OFF or open.
		Detection surface of an emitter or a receiver is dirty.	Clean the surface.
		A blanked beam received light that is not configured as an allowable beam while fixed blanking function is being enabled and monitoring function is configured as release at unblocked.	(1) A fixed blanking zone is configured wider. Configure the zone again, or execute teaching. (2) If (1) did not solve the problem, configure allowable beams. If one allowable beam has been already configured, set 2 beams as allowable beams.

• Light intensity level indicators do not turn ON even if a beam receives light, while only the power indicator, OFF output indicator, and receiver's error code A are being turned ON

Emitter	Receiver	Cause	Action
		Communication line is broken between an emitter and a receiver. Or effect of noise on the communication line is too much.	Perform the proper wiring. Or, check the noise level in the environment around the communication line.
		Power connector is detached.	Plug the power connector tightly to ensure connection.

•Safety output may be turned OFF even if a beam is not blocked.

Cause	Action
Beam may be misaligned due to oscillation.	Install F3SJ sop that it should not be affected by oscillation. Also, adjust F3SJ beams based on "Adjustment Procedure p.156 ".
Light emitted from another F3SJ or photoelectric sensor is being received.	Solve the problems based on "Mutual Interference Prevention p.117 ".
A blanked beam received light that is not configured as an allowable beam while fixed blanking function is being enabled and monitoring function is configured as release at unblocked.	Configure an allowable beam. If one allowable beam has been already configured, set 2 beams as allowable beams.

Accessories (Sold Separately)

Cable with connector on one end (2 cables per set, for emitter and receiver)

Appearance	Model name	Cable length	Specifications
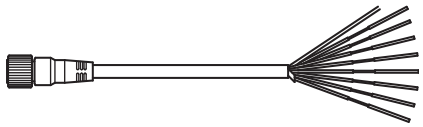	F39-JD3A	3m	M12 connector (8-pin) - 8 wires + Shield
	F39-JD7A	7m	
	F39-JD10A	10m	
	F39-JD15A	15m	
	F39-JD20A	20m	

Cable with connectors on both ends: For connection with F3SP-B1P or cable extension (2 cables per set, for emitter and receiver)

Appearance	Model name	Cable length	Specifications
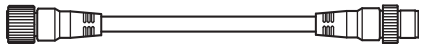	F39-JDR5B	0.5m	M12 connector (8-pin) - M12 connector (8-pin)
	F39-JD1B	1m	
	F39-JD3B	3m	
	F39-JD5B	5m	
	F39-JD7B	7m	
	F39-JD10B	10m	
	F39-JD15B	15m	
	F39-JD20B	20m	

Cable with connectors on both ends: For connection with G9SA-300-SC (2 cables per set, for emitter and receiver)

Appearance	Model name	Cable length	Specifications
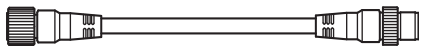	F39-JCR2C	0.2m	M12 connector (8-pin) - M12 connector (8-pin) For cable extension, use F39-JD□B so that F39-JC□C should be on the side of G9SA-300-SC.
	F39-JC1C	1m	
	F39-JC3C	3m	
	F39-JC7C	7m	
	F39-JC10C	10m	
	F39-JC15C	15m	

Connection cable (2 cables per set, for emitter and receiver)

Appearance	Model name	Cable length	Specifications
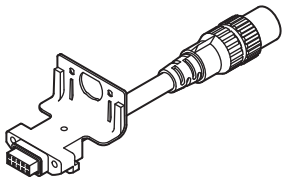	F39-JJR3K	0.3m	Cap (10-pin) - M12 connector (8-pin)

* Standard cable included with the F3SJ. Purchase a replacement when damaged or lost.

Simple Wiring Connector

Appearance	Model name	Note
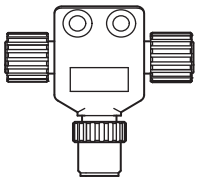	F39-CN5	This connector is used for a reduced wiring system, in combination with the following cables for reduced wiring system.

Cable for reduced wiring (2 cables per set, for emitter and receiver)

Appearance	Model name	Cable length	Note
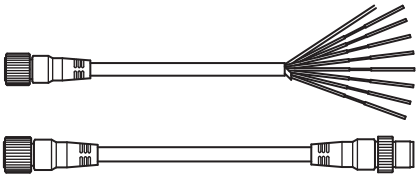	F39-JD0303BA	Emission: 3m Light Reception: 3m	Double-Ended Cable: F39-JD3B-L Single-Ended Cable: F39-JD3A-D
	F39-JD0307BA	Emission: 3m Light Reception: 7m	Double-Ended Cable: F39-JD3B-L Single-Ended Cable: F39-JD7A-D
	F39-JD0310BA	Emission: 3m Light Reception: 10m	Double-Ended Cable: F39-JD3B-L Single-Ended Cable: F39-JD10A-D
	F39-JD0503BA	Emission: 5m Light Reception: 3m	Double-Ended Cable: F39-JD5B-L Single-Ended Cable: F39-JD3A-D
	F39-JD0507BA	Emission: 5m Light Reception: 7m	Double-Ended Cable: F39-JD5B-L Single-Ended Cable: F39-JD7A-D
	F39-JD0510BA	Emission: 5m Light Reception: 10m	Double-Ended Cable: F39-JD5B-L Single-Ended Cable: F39-JD10A-D
	F39-JD1003BA	Emission: 10m Light Reception: 3m	Double-Ended Cable: F39-JD10B-L Single-Ended Cable: F39-JD3A-D
	F39-JD1007BA	Emission: 10m Light Reception: 7m	Double-Ended Cable: F39-JD10B-L Single-Ended Cable: F39-JD7A-D
	F39-JD1010BA	Emission: 10m Light Reception: 10m	Double-Ended Cable: F39-JD10B-L Single-Ended Cable: F39-JD10A-D

Note: Also available is a combination of cables for an emitter and a receiver with other lengths than the above. For details, contact Omron.
* 1. Double-ended cable for an emitter and single-end cable for a receiver.

Series connection cable for close contact (2 cables per set, for emitter and receiver)

Appearance	Model name	Cable length	Specifications
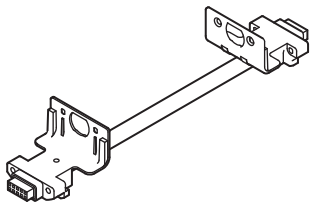	F39-JJR06L	0.06m	Cap (10-pin) - Cap (10-pin)
	F39-JJR15L	0.15m	

Series connection cable for extension (2 cables per set, for emitter and receiver)

Appearance	Model name	Cable length	Specifications
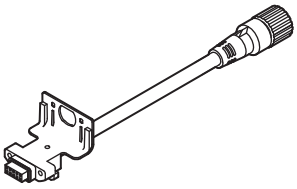	F39-JJR3W	0.3m	Cap (10-pin) - M12 connector (8-pin)

Universal indicator cable

Appearance	Model name	Cable length	Specifications
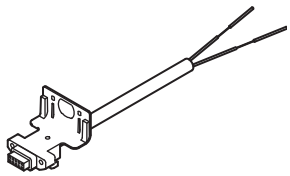	F39-JJ3N	3m	Cap (10-pin) - 2 wires

External indicator set

Appearance	Model name	Color	Specifications
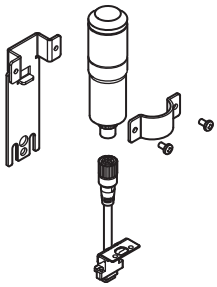	F39-A01PR-PAC	Red	Cap (10-pin) - M12 connector (8-pin) Mounting brackets included Cable length 0.1m
	F39-A01PG-PAC	Green	
	F39-A01PY-PAC	Yellow	

Setting Console

Appearance	Model name	Note
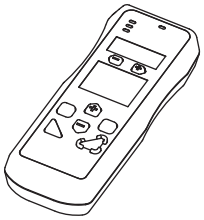	F39-MC21	Branch connector, connector cap, dedicated cable, and dedicated cable with plug are provided.

PC tool for F3SJ

Appearance	Model name	Note
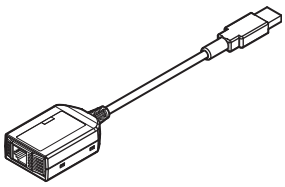	F39-GWUM	CD-ROM (SD Manager), branch connector, connector cap, dedicated cable, and dedicated cable with plug are provided.

Key cap for muting

Appearance	Model name	Note
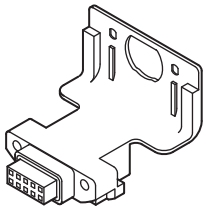	F39-CN6	Case color: Orange Can be used for emitter and receiver

Control unit

Appearance	Model name	Output	Note
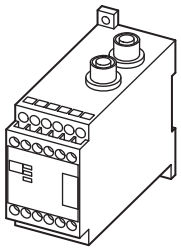	F3SP-B1P	Relay, 3a+1b contact	- F39-JD□B cable with connectors on both ends is required. - F3SJ with PNP output can be connected. - Cannot be used as a muting system.

Control unit

Appearance	Model name	Output	Note
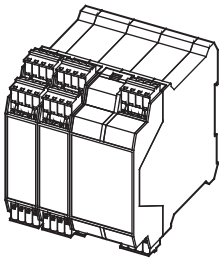	F3SX-N-□□□□	Relay, 2a+1b contact (expandable)	- Connector connection is possible by using an F39-JD□B cable with connectors on both ends and an F39-JC□T branch connector for safety light curtains. Connection is possible only with an F39-JD□A cable with connector on one end. - A door switch, two-hand control switch, single beam, or relay unit can be added to the F3SX. - F3SJ with PNP output can be connected. - Can be used as a muting system if an F39-JD□A cable with connectors at both ends is used. - Various settings can be changed and input/output terminals can be monitored using the setting support software for F3SX.
	F3SX-E-□□□□	Solid-state output (DC solid-state safety output X 2, Auxiliary output X 3)	

Control unit

Appearance	Model name	Output	Note
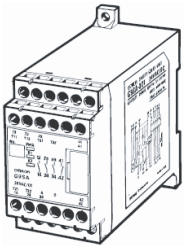	G9SA-301	Relay, 3a+1b contact	- F39-JD□A cable with connector on one end is required. - F3SJ with PNP output can be connected. - Type with 5a+1b contact is also available.

Control unit

Appearance	Model name	Output	Note
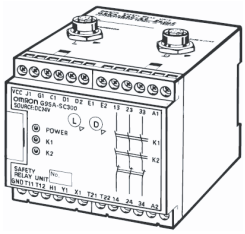	G9SA-300-SC	Relay, 3a contact	- One set of F39-JC□C cables with connectors on both ends is required. - When extending the cable length, use 1 set of F39-JC□C and multiple sets of F39-JD□B. - F3SJ with PNP output can be connected. - Cannot be used as a muting system.

Control unit

Appearance	Model name	Output	Note
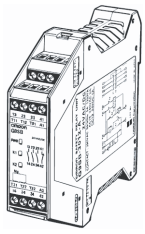	G9SB-301-B	Auto reset, 3a+1b contact	- F39-JD□A cable with connector on one end is required. - F3SJ with PNP output can be connected. - The thickness for 3a+1b contact type output is 25 mm. - The thickness for 2a contact type output is 17.5 mm.
	G9SB-301-D	Manual reset, 3a+1b contact	
	G9SB-200-B	Auto reset, 2a contact	
	G9SB-200-D	Manual reset, 2a contact	

Control unit

Appearance	Model name	Output	Note
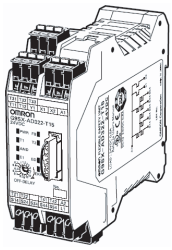	G9SX-AD322-T15	Solid-state output (Instantaneous output X 3, OFF-delay output X 2)	- F39-JD□A cable with connector on one end is required. - F3SJ with PNP output can be connected. - OFF-delay within 15 seconds can be set to 16 levels. - Use as instantaneous output is possible by setting OFF-delay output to 0 seconds. - Can be configured for partial control and total control. - Relay unit can also be connected.

Spatter Protection Cover (2 cables per set, one for emitter and one for receiver)

Appearance	Model name	Note
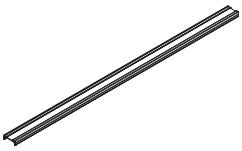	F39-HJ□□□□	In this table, the □□□□ in the model indicates the same 4-digit number as the protective height (□□□□ in the model) of the F3SJ.When a spatter-proof cover is attached, operating range of F3SJ is reduced by about 10%.Spatter-proof cover with 1970 or higher of □□□□ in the model is divided into 2 in combination to use.

Protect bar (1 set, common for emitter/receiver)

Appearance	Model name	Note
	F39-PJ□□□□-S	One protect bar is provided in a set (common for emitter/receiver). If both of an emitter and a receiver need a protect bar respectively, you must purchase 2 sets. For side mounting of F3SJ with a width of 1001mm or wider, you must purchase protection bracket (4) for protect bar (F39-PJ-MS).

Protection bracket for protect bar (4)

Appearance	Model name	Note
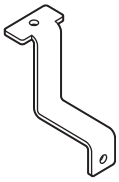	F39-PJ-MS	Intermediate mounting bracket for side mounting using a protect bar. You must purchase 1 set for F3SJ with protective height from 1001 to 2000mm, or 2 sets for F3SJ with protective height of 2009 to 2495mm.

Environment-resistant case

Appearance	Model name		Note
	For emitter	F39-EJ□□□□-L	One environment-resistant case is provided in a set. Mounting bracket is not included. You must purchase optional back-mounting bracket (F39-EJ-R) or side-mounting bracket (F39-EJ-S). When environment-resistant case is used, operating range is from 0.2 to 7m (protective height of 1649mm or less) and from 0.2 to 5m (protective height of 1655mm or more). If protective height of F3SJ is 605mm or more, only vertical mounting as shown left is available. A protective structure complies to IP67(IEC60529).
	For receiver	F39-EJ□□□□-D	

Back-mounting bracket for environment-resistant case

Appearance	Model name	Note
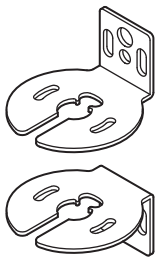	F39-EJ-R	2 brackets per set

Side-mounting bracket for environment-resistant case

Appearance	Model name	Note
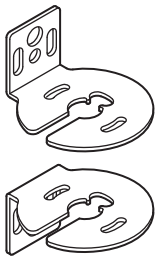	F39-EJ-S	2 brackets per set

Series connection cable for environment-resistant case

Appearance	Model name		Note
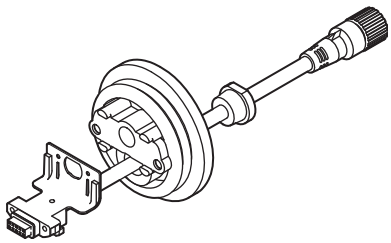	For emitter	F39-JJR3WE-L	Required for series connection with an environment-resistant case. Series-connection cable for 1 set of sensors.
	For receiver	F39-JJR3WE-D	

Top/bottom mounting bracket (for top/bottom mounting)

Appearance	Model name	Application	Note
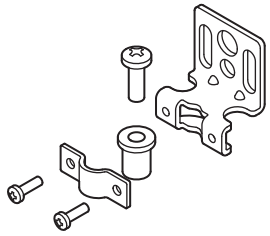	F39-LJ1	(Standard brackets included with the F3SJ) Purchase replacements when damaged or lost.	2 brackets for emitter, 2 brackets for receiver (4 brackets per set)

Side flat mounting bracket (4 brackets per set)

Appearance	Model name	Application	Note
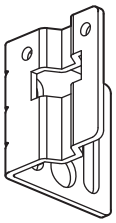	F39-LJ2	Use these small-sized brackets when performing side mounting with top/bottom mounting brackets, so that they do not protrude from the detection surface.	2 brackets for emitter, 2 brackets for receiver (4 brackets per set) (Use in combination with top/bottom mounting brackets)

Free-location mounting bracket (also used as standard mounting bracket)

Appearance	Model name	Application	Note
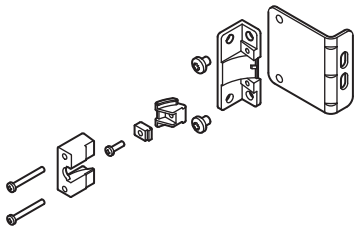	F39-LJ3	Brackets for mounting in any location without using top/bottom mounting brackets. Side mounting and backside mounting are possible.	2 brackets per set Same as the intermediate mounting brackets included for F3SJ with protective height larger than 595mm.

Top/bottom mounting bracket B

Appearance	Model name	Application	Note
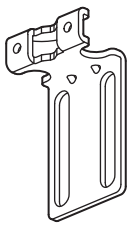	F39-LJ4	Mounting bracket used when replacing existing zone sensors with the F3SJ. Suitable for mounting hole pitch of 18 to 20mm.	2 brackets for emitter, 2 brackets for receiver (4 brackets per set) (Use in combination with top/bottom mounting brackets)

Mounting bracket for F3SN replacement

Appearance	Model name	Application	Note
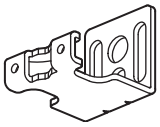	F39-LJ5	Mounting bracket used when an F3SN with protective height of 300mm or less is replaced by an F3SJ.	2 brackets for emitter, 2 brackets for receiver (4 brackets per set) (Use in combination with top/bottom mounting brackets)

Space-saving mounting bracket

Appearance	Model name	Application	Note
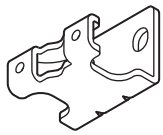	F39-LJ8	Brackets that can save mounting space for top and bottom	2 brackets for an emitter, 2 for a receiver (4 brackets per set)

Mounting bracket for F3W-C replacement

Appearance	Model name	Application	Note
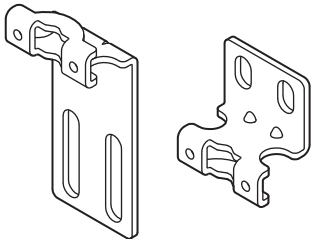	F39-LJ9	Mounting bracket used when replacing existing zone sensors F3W-C series with the F3SJ.	2 brackets for an emitter, 2 for a receiver (4 brackets per set)

Top/bottom mounting bracket C

Appearance	Model name	Application	Note
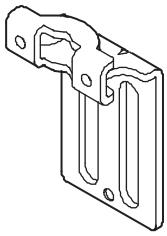	F39-LJ11	Mounting bracket used when replacing existing area sensors with the F3SJ. Suitable for mounting hole pitch of 12 to 14mm.	2 brackets for emitter, 2 brackets for receiver (4 brackets per set)

Test rod

Appearance	Model name	Diameter
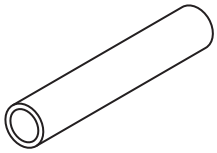	F39-TRD14 F39-TRD20 F39-TRD25 F39-TRD30	Dia. 14mm Dia. 20mm Dia. 25mm Dia. 30mm

CHECK! To check operation before use, purchase and use the test rod.

Glossary

	Term	Definition
A	Access qualification	Function that requires a password to change setting to prevent careless change of F3SJ's functional setting.
	Accumulated load switching frequency	This value indicates the cumulative value for load switching frequency, from when power was first supplied to the F3SJ until the present.
	Administrator level	Mode for F3SJ's functional setting change. Password input is required to log in to this mode because of access qualification.
	Allowable delay time	The allowable amount of time from when the safety output changes until the external device monitoring input changes. The F3SJ enters lockout if this time is exceeded.
	Auto reset	Setting status by which the safety output automatically turns ON when the F3SJ receives light after the power is turned ON and after the F3SJ is blocked.
	Auxiliary output 1	Allows output appropriate for the setting. This CANNOT be used for safety applications.
	Auxiliary output 2	Allows output appropriate for the setting. This CANNOT be used for safety applications. When a muting enabling key cap (F39-CN6) is attached, this output is used as a muting input.
	Auxiliary output diagnosis function	Detects breakage and short-circuits for the muting lamp or external indicator connected to auxiliary output 1.
B	Basic system	This refers to the F3SJ in the state it is in when purchased. The basic system provides basic safety light curtain functions. Most functions can be used without performing additional configuration.
	Blanking zone	A range of consecutive beams for which fixed or floating blanking is configured.
	Breakage detection	This function puts the F3SJ in lockout when there is broken connection between the output terminals for the external indicator.
D	Designated beam interruption information	ON is output when any of the designated beams are interrupted. Beams must be designated if this output operation is selected.
	Designated beam output	Provides output based on incidence/interruption status of a designated beam. Destination can be assigned to auxiliary output or external indicator output.
	Detection capability	Minimum size of an object that can be detected in the protective height of the F3SJ.
	Disturbance light level display	This display can read out the disturbance light level of the F3SJ. For the PC tool for F3SJ, the level can be checked using a graph.
E	Effective aperture angle (EAA)	Range of angles for which the F3SJ can operate.
	End beam disable mode	If either end beam of the F3SJ is set as a floating beam, its status as a floating beam target is cancelled.
	Error/lockout information	This information is output from the auxiliary output or external indicator when an error or lockout occurs. Note that the error/lockout information must be assigned to an output destination.
	Exit only muting delay time	The OFF delay time from when the signal of muting input 1 or 2 turns OFF until the muting state is cancelled.
	Exit only muting mode	Used when there is only enough space to install a muting sensor on one end of the F3SJ.
	External device monitoring function(EDM)	Function that detects malfunctions, such as welding, in external relays (or contactors) that control the hazardous zone of a machine, by monitoring the operation of N.C. contact.
	External indicator diagnosis function	Detects breakage and short-circuits for the muting lamp or external indicator connected to the external indicator output.
	External Indicator Output 1	Allows configuration of receiver's output based on settings. This CANNOT be used for safety applications.
	External Indicator Output 2	Allows configuration of emitter's output based on settings. This CANNOT be used for safety applications.
	External test	Function that stops emission at any time to check that the safety output is being properly turned OFF.
F	Fixed blanking	Disables part of F3SJ's operation range. Safety output will not change even if an object enters the disabled zone.
	Fixed blanking monitoring function	This function puts the F3SJ in lockout state when part of the fixed blanking zone is interrupted.
	Fixed blanking zone	This refers to the zone set in the fixed blanking function. One zone can be set by the setting console, and 5 zones can be set by the PC tool for F3SJ.

	Term	Definition
F	Floating beam	This refers to number of interrupted beams for which F3SJ does not transition to lockout or the safety output to turn OFF, when the floating blanking function is enabled.
	Floating blanking	Safety output will not turn OFF unless any two or more beams are interrupted.
	Floating blanking monitoring function	This setting causes the F3SJ to enter lockout if an interrupting object is smaller than the dimensions of each setting value when in sequential beam mode.
	Floating blanking zone	This refers to the zone set in the floating blanking function. One zone can be set by the setting console. The PC tool for F3SJ can set 1 zone as well, while it can specify a zone range.
I	Lighting-on pattern	Sets the lighting-on/blinking patterns when an external indicator is connected.
	Incidence information	This information is output from the auxiliary output or external indicator when all beams necessary for turning the safety output ON are incident. Note that the incidence information must be assigned to an output destination.
	Incident light level indicator	This indicator can read out the incident light level of the F3SJ. For the PC tool for F3SJ, the level can be checked using a graph.
	Information trigger information	Output from the auxiliary output or external indicator when the interlock, lockout, or muting error state occurs. Note that the information trigger information must be assigned to an output destination.
	Interlock	Function that holds the safety outputs to OFF until safety is ensured and a reset input is applied.
	Interlock Information	Provides output through auxiliary output or external indicator if interlock input is ON. Note that interlock information must be assigned to the destination.
	Interlock reset	Cancels the interlock state.
K	Key cap for muting	Connector that is attached to the end cap of an emitter or receiver to use muting function.
L	Light level diagnosis information	This information is output from the auxiliary output or the external indicator when the F3SJ is ON and when the incident light level is from 100% to 130% of the ON threshold value for 10 seconds or more. Note that the light level diagnosis information must be assigned to an output destination.
	Load Switching Frequency	Indicates load switching frequency connected to F3SJ.
	Lockout	Function that holds safety output OFF when an error is detected by the F3SJ.
	Lower beams	Indicate beams on F3SJ's power supply end.
M	Maintenance Status	Status when the setting tool is connected. This status has the following difference comparing with the normal operation status. - Safety outputs stay OFF. - The OFF-state indicator blinks when one or more beams are blocked. - The ON-state indicator blinks when no beams are blocked. - The power indicator blinks. - Lockout state does not occur except by model error, communication error, setting value error and internal circuit failure.
	Manual reset	Setting status by which the safety outputs is turned ON from the interlock state by applying a reset input while the F3SJ is receiving light.
	Master password	Password to initialize (to "0000") the log-in password for administrator level.
	Muting	Function that temporarily disables the safety function of the F3SJ, keeping the safety output ON even if beams are being blocked.
	Muting end wait time	This is the OFF delay time from when the F3SJ is incident until the muting state is cancelled.
	Muting error	Occurs when muting input is not applied in the correct order. As long as the F3SJ is not interrupted, safety output does not turn OFF and normal operation continues.
	Muting input time limit value (maximum value)	This is the maximum value of the time difference for the inputs of muting input 1 and 2. It is set as 3s.
	Muting input time limit value (minimum value)	This is the minimum value of the time difference for the inputs of muting input 1 and 2. It is set as 0.03s.
	Muting input time with allowable waveform cracks	The maximum value of the time of the waveform cracks permitted by muting input 1 and muting input 2, when muting is in effect. It is set as 0.1s.
	Muting sensor	Input device, such as photoelectric sensor or proximity sensor, that inputs the timing of the start and end of the muting function.
	Muting system	This refers to the F3SJ when a key cap for muting is attached. The muting function and override function can be used.
	Muting time limit	This is the muting function continuation time. The muting function is cancelled if the muting state continues for longer than this time limit.

	Term	Definition
N	Non-sequential beam mode	In this mode, interruption is determined to have occurred when the total number of interrupted beams is equal to or greater than the number of beams specified in the setting.
	Number of Allowable Beams	Allowable fixed blanking beams. It represents a beam out of the target of fixed blanking monitoring although it is a fixed blanking zone.
		Allowable floating blanking beams. F3SJ enters lockout if a size gets under setting value for contiguous floating mode with monitoring function enabled.
	Number of floating beams	This setting causes the F3SJ output to turn OFF if an interrupting object is larger than each setting value, when the floating blanking function is enabled.
O	Operating range change function	This function changes the operating range according to the F3SJ installation distance.
	Output operation mode	Details that are output from the auxiliary output or external indicator output.
	Override	Function that forcibly turns the safety output ON when the muting function is not working.
	Override time limit	The continuation time of the override function. The override state is cancelled if it continues for longer than this time limit.
P	PC tool for F3SJ	Setting tool that connects to a PC and makes settings with setting software (SD Manager). Setting and monitoring of all functions is possible.
	Position detection muting mode	Mode that enables the muting function with heterogeneous redundant input.
	Power-on time	This is the current power-on time since the power-on time was last reset.
	Power-on time information	This information is output from the auxiliary output or external indicator when the power-on time exceeds the power-on time threshold value. Note that the power-on time information must be assigned to an output destination.
	Power-on time reset	This function can reset the power-on time of the F3SJ to 0. In the case of series connection, the power-on time can be reset for each F3SJ CH.
	Power-on time threshold value	This can be output from the auxiliary output or the external indicator output when the power-on time exceeds this value. Note that the power-on time information must be assigned to an output mode.
	Primary sensor	Name of the F3SJ connected nearest the power supply when series-connected.
R	Reset	Releases the interlock state/lockout state.
	Response time from ON to OFF	Time period from when the F3SJ is blocked until the safety output turns from ON to OFF.
	Restart interlock	Enters interlock state when the F3SJ is blocked.
	Reverse output mode	In this mode, the logic of the auxiliary output and external indicator output is reversed.
S	Safety output (OSSD)	Outputs +24V when receiving light. Can be used for safety applications.
	Safety output information	This information is output from the auxiliary output or external indicator when the auxiliary output turns ON. Note that safety output information must be assigned to an output destination.
	SD Manager	Setting software that is used for the PC tool for F3SJ. Setting and monitoring of all functions is possible.
	Secondary sensor	Name used for F3SJ other than the primary sensor, when series-connected.
	Sequential beam mode	In this mode, output ON continues even when interrupted, if an interrupting object is within the range of the specified size in one contiguous zone.
	Setting console	Convenient tool for changing and monitoring settings. The setting console can be carried to the site. There are some functions that cannot be used.
	Setting recovery	Function to restore the F3SJ's factory settings or the settings made before the most recent change.
	Setting tool	This refers to the F39-MC21 setting console and the F39-GWUM PC tool for F3SJ.
	Short-circuit detection	This function puts the F3SJ in lockout when there is short-circuit between the output terminals for the external indicator.
	Standard muting mode	This mode is set as the default factory setting and is used when there is enough space to install muting sensors at both ends of the F3SJ.
	Start interlock	Enters interlock after power is turned ON.
	Status information display	This display can read out the I/O data and status of the F3SJ. This function is available only for the PC tool for F3SJ.

	Term	Definition
T	Teaching	Function that configures a target beam as interrupted for following functional settings. - Muting function - Fixed blanking function - Floating blanking function - Warning Zone function - Designated beam output function
	Test input ON information	The external indicator turns ON when the test input is ON. When the test input is ON, the F3SJ activates the external diagnosis function.
U	Upper beams	Indicate beams on F3SJ's terminal.
	User level	Mode that reads receiving light intensity and monitors F3SJ's operating status such as disturbance light measurement by the setting tool. Password is not required to transition to this mode.
W	Warning zone information	This information is output from the auxiliary output or the external indicator when the warning zone is blocked. Note that the warning zone information must be assigned to an output destination.
	Warning zone function	When part of the detection zone is configured as a warning zone, the unblocked/blocked status of the zone does not affect the safety output. Instead, the unblocked/blocked status can be output from the auxiliary output, etc.

Related Standards

International Standards

- IEC61496-1:2020 Safety of machinery - Electro-sensitive protective equipment - Part 1: General requirements and tests
- IEC61496-2:2020 Safety of machinery - Electro-sensitive protective equipment - Part 2: Particular requirements for equipment using active opto-electronic protective devices
- IEC61508-1 to 3:2010 Functional safety of electrical/electronic/programmable electronic safety-related systems
- ISO13855:2002 Safety of machinery - Positioning of protective equipment with respect to the approach speeds of parts of the human body
- ISO 13849-1 Safety of machinery - Safety-related parts of control systems - Part 1: General principles for design

European Standards

- EN ISO 13849-1 Safety of machinery - Safety-related parts of control systems - Part 1: General principles for design
- EN61496-1:2020 Safety of machinery - Electro-sensitive protective equipment - Part 1: General requirements and tests
- EN61496-2:2020 Safety of machinery - Electro-sensitive protective equipment - Part 2: Particular requirements for equipment using active opto-electronic protective devices
- EN61508-1 through -3:2010 Functional safety of electrical/electronic/programmable electronic safety-related systems
- EN415-4:1997 Palletisers and depalletisers
- EN692:1996 Mechanical presses
- EN693:2001 Hydraulic presses
- EN999:1999 Safety of machinery - Positioning of protective equipment with respect to the approach speeds of parts of the human body
- EN1037:1995 Safety of machinery : Preventation of unexpected start-up

U.S. Federal Regurations

- OSHA 29 CFR 1910.212 General requirements for all machines
- OSHA 29 CFR 1910.217 Mechanical power presses

U.S. Standards

- ANSI B11.1:2001 Mechanical power presses
- ANSI B11.2:1995(R2005) Hydraulic power presses
- ANSI B11.3:2002 Power press brakes
- ANSI B11.4:2003 Metal shears
- ANSI B11.5:1988(R2002) Iron workers
- ANSI B11.6:2001 Lathes
- ANSI B11.7:1995(R2005) Cold headers and cold formers
- ANSI B11.8:2001 Drilling, milling, and boring machines
- ANSI B11.9:1975(R2005) Grinding machines
- ANSI B11.10:2003 Metal sawing machines
- ANSI B11.11:2001 Gear cutting machines
- ANSI B11.12:2005 Roll forming and roll bending machines

- ANSI B11.13:1992(R1998) Single- and multiple-spindle automatic bar and chucking machines
- ANSI B11.14:1996 Coil slitting machines/systems
- ANSI B11.15:2001 Pipe, tube, and shape bending machines
- ANSI B11.16:2003 Metal powder compacting presses
- ANSI B11.17:2004 Horizontal hydraulic extrusion presses
- ANSI B11.18:1997 Machines and machinery systems for processing strip, sheet or plate from coiled configuration
- ANSI B11.19:2003 Performance criteria for the design, construction, care, and operation of safeguarding when referenced by the other B11 machine tool safety standards
- ANSI/RIA 15.06:1999 Industrial robots & robot systems safety requirements
- UL1998:1998 Safety-related software
- UL508:1999 Industrial control equipment
- UL61496-1:2002 Electro-sensitive protective equipment - Part 1: General requirements and tests
- UL61496-2:2002 Electro-sensitive protective equipment - Part 2: Particular requirements for active opto-electronic protective devices

Canadian Standards

- CAN/CSA C22.2 No.14-05 Industrial control equipment
- CAN/CSA C22.2 No.08-M1986(R2003) Electronics integrated safety functions
- CSA Z142-02 Code for power press operation: Health, safety, and guarding requirements
- CSA Z432-04 Safeguarding of machinery
- CCSA Z434-03 Industrial robots and robot systems : General safety requirements

SEMI Standards

- SEMI S2-0703 Environmental, health, and safety guideline for semiconductor manufacturing equipment

JIS Standards

- JIS B 9704-1:2015 Safety of machinery - Electro-sensitive protective equipment - Part 1 : General requirements and tests
- JIS B 9704-2:2008 Safety of machinery - Electro-sensitive protective equipment - Part 2 : Particular requirements for equipment using active opto-electronic protective devices

Revision History

A manual revision code appears as a suffix to the manual number at the bottom of the front and back covers of this manual.

SCHG-718U

↑

Revision No.

Revision symbol	Revision date	Revisions
B	November, 2005	First edition
C	February, 2006	Minor correction
D	May, 2006	Minor correction
E	December, 2006	Added F3SJ-A□□□□P55
F	July, 2007	Added F3SJ-A□□□□P25 Troubleshooting revised
G	August, 2008	Changed mounting screw. Added information to "Precautions for Correct Use".
H	January, 2010	Added the contents about new Machinery Directives Minor correction
I	November, 2011	Added the contents about EN ISO13849-1:2008 Change the contents about EN 61496-2
J	November, 2012	Added and corrected dimensions and notes. Corrected the contents about EN 61508. Correction of errors.
K	July, 2014	Corrected the procedure of how to release the muting error. Corrected the waveform of the safety output of the self test function. Updated the dates of effect for standards. Changed the content of "Terms and Conditions Agreement". Added simple wiring connectors and reduced wiring cables Added single-ended cable and double-ended cable models Changed the test rod as an optional accessory. Minor correction
L	July, 2015	Updated the dates of effect for standards.
M	February, 2018	Updated the year of the applicable standards. Corrected the contents of the ratings (input voltage) and wiring examples. Deleted the discontinued production models. Corrected the condition of the length of the power cable and series connection cable. Corrected the timing chart of the manual reset. Corrected the output timing chart of the wiring diagram. Corrected the placement of the muting sensor. Corrected the information of the external indicator output. Changed the contents about the safety distance. Added the contents about the simple wiring connector. Changed the contents about the checklists. Changed the accessories. Corrected the erroneous description.
N	July, 2018	Corrected the year of the applicable standards.
P	May 2020	Updated the year of EN ISO 13849-1 and ISO 13849-1. Added information on product weight. Updated the electrical symbols in circuit diagrams. Minor corrections.
S	September, 2023	Added precaution to *Safety Precautions*. Change in quantity of accessories (Instruction sheet, Quick installation manual). Changed Vibration and Shock resistance specifications based on revision of EN 61496-1. Corrected the description of the check for a muting lamp in Maintenance Checklists.

Revision symbol	Revision date	Revisions
T	June 2023	Renewal of conformity year of standard
U	July 2026	Descriptions of the Machinery Regulation are added.

OMRON Corporation **Industrial Automation Company**

Kyoto, JAPAN **Contact : www.ia.omron.com**

Regional Headquarters

OMRON EUROPE B.V.
Wegalaan 67-69, 2132 JD Hoofddorp
The Netherlands
Tel: (31) 2356-81-300 Fax: (31) 2356-81-388

OMRON ELECTRONICS LLC
2895 Greenspoint Parkway, Suite 200
Hoffman Estates, IL 60169 U.S.A.
Tel: (1) 847-843-7900 Fax: (1) 847-843-7787

OMRON ASIA PACIFIC PTE. LTD.
438B Alexandra Road, #08-01/02 Alexandra
Technopark, Singapore 119968
Tel: (65) 6835-3011 Fax: (65) 6835-3011

OMRON (CHINA) CO., LTD.
Room 2211, Bank of China Tower,
200 Yin Cheng Zhong Road,
PuDong New Area, Shanghai, 200120, China
Tel: (86) 21-6023-0333 Fax: (86) 21-5037-2388

Authorized Distributor:

©OMRON Corporation 2005-2026 All Rights Reserved.
In the interest of product improvement,
specifications are subject to change without notice.

Cat. No. SCHG-718U 0726 (1105)