OMRON

Safety Light Curtain

F3SJ-A□□□□P□□-01TS Series

User's Manual

Cat. No. SCHG-722R

Original instructions

Introduction

Thank you for purchasing the F3SJ Series Safety Light Curtain (hereinafter referred to as the "F3SJ").
This is the instruction Manual describing the use of F3SJ.
Always heed the following points when using the F3SJ:

- Be sure to have F3SJ be handled by a "Responsible Person" who is well aware of and familiar with the machine to be installed.
- The term "Responsible Person" used in this Instruction Manual means the person qualified, authorized and responsible to secure "safety" in each process of the design, installation, operation, maintenance services and disposition of the machine.
- It is assumed that F3SJ will be used properly according to the installation environment, performance and function of the machine. Responsible Person should conduct risk assessment on the machine and determine the suitability of this product before installation.
- Read this Manual thoroughly to understand and make good use of the descriptions before installing and operating the product.
- Keep this Manual at the place where the operator can refer to whenever necessary.

Legislation and Standards

1. Application of a F3SJ-A sensor alone cannot receive type approval provided by Article 44-2 of the Labour Safety and Health Law of Japan. It is necessary to apply it in a system. Therefore, when using the F3SJ-A in Japan as a "safety system for pressing or shearing machines" prescribed in Article 42 of that law, the system must receive type approval.
2. The F3SJ-A is electro-sensitive protective equipment (ESPE) in accordance with European Union (EU) Machinery Regulation Index Annex II, Item 2
3. EC Declaration of Conformity
   OMRON declares that the F3SJ-A is in conformity with the requirements of the following EU Regulations and EC Directives:
   Machinery Regulation (EU) 2023/1230
   EMC Directive 2014/30/EU
4. The F3SJ-A is in conformity with the following standards:
   (1)European standards
   EN61496-1 (Type 4 ESPE), EN 61496-2 (Type 4 AOPD), EN61508-1 through -3 (SIL3),
   EN ISO 13849-1 (Category 4, PL e)
   (2)International standards
   IEC61496-1 (Type 4 ESPE), IEC61496-2 (Type 4 AOPD), IEC61508-1 through -3 (SIL3),
   ISO 13849-1 (Category 4, PL e)
   (3)JIS standards
   JIS B 9704-1 (Type 4 ESPE), JIS B 9704-2 (Type 4 AOPD)
   (4)North American Standards:
   UL61496-1(Type 4 ESPE), UL61496-2(Type 4 AOPD), UL508, UL1998, CAN/CSA C22.2 No.14,
   CAN/CSA C22.2 No.0.8
5. The F3SJ-A received the following approvals from the EU accredited body, TÜV SÜD Product Service GmbH:
   - EC Type-Examination in accordance with the EU Machinery Regulation, Type 4 ESPE (EN61496-1), Type 4 AOPD (EN 61496-2)
   - TÜV SÜD Product Service GmbH Type Approval, Type 4 ESPE (EN61496-1), Type 4 AOPD (EN 61496-2), SIL1, 2, 3 (EN 61508-1 through -3), EN ISO 13849-1 (Category 4, PL e)
6. The F3SJ-A received the certificates of UL listing for US and Canadian safety standards from the Third Party Assessment Body UL.
   - Both are: Type 4 ESPE (UL61496-1), Type 4 AOPD (UL61496-2)
7. The F3SJ-A is designed according to the standards listed below. To make sure that the final system complies with the following standards and regulations, you are asked to design and use it in accordance with all other related standards, laws, and regulations. If you have any questions, consult with specialized organizations such as the body responsible for prescribing and/or enforcing machinery safety regulations in the location where the equipment is to be used.
   - European Standards: EN415-4, EN692, EN693
   - U.S. Occupational Safety and Health Standards: OSHA 29 CFR 1910.212
   - U.S. Occupational Safety and Health Standards: OSHA 29 CFR 1910.217
   - American National Standards: ANSI B11.1 to B11.19
   - American National Standards: ANSI/RIA 15.06
   - Canadian Standards Association CSA Z142, Z432, Z434
   - SEMI Standards SEMI S2
   - Ministry of Health, Labour and Welfare "Guidelines for Comprehensive Safety Standards of Machinery", Standard Bureau's Notification No. 501 dated June 1, 2001.

Terms and Conditions Agreement

Read and understand this catalog.

Please read and understand this catalog before purchasing the products. Please consult your OMRON representative if you have any questions or comments.

Warranties.

(a) Exclusive Warranty. Omron's exclusive warranty is that the Products will be free from defects in materials and workmanship for a period of twelve months from the date of sale by Omron (or such other period expressed in writing by Omron). Omron disclaims all other warranties, express or implied.

(b) Limitations. OMRON MAKES NO WARRANTY OR REPRESENTATION, EXPRESS OR IMPLIED, ABOUT NON-INFRINGEMENT, MERCHANTABILITY OR FITNESS FOR A PARTICULAR PURPOSE OF THE PRODUCTS. BUYER ACKNOWLEDGES THAT IT ALONE HAS DETERMINED THAT THE PRODUCTS WILL SUITABLY MEET THE REQUIREMENTS OF THEIR INTENDED USE.

Omron further disclaims all warranties and responsibility of any type for claims or expenses based on infringement by the Products or otherwise of any intellectual property right. (c) Buyer Remedy. Omron's sole obligation hereunder shall be, at Omron's election, to (i) replace (in the form originally shipped with Buyer responsible for labor charges for removal or replacement thereof) the non-complying Product, (ii) repair the non-complying Product, or (iii) repay or credit Buyer an amount equal to the purchase price of the non-complying Product; provided that in no event shall Omron be responsible for warranty, repair, indemnity or any other claims or expenses regarding the Products unless Omron's analysis confirms that the Products were properly handled, stored, installed and maintained and not subject to contamination, abuse, misuse or inappropriate modification. Return of any Products by Buyer must be approved in writing by Omron before shipment. Omron Companies shall not be liable for the suitability or unsuitability or the results from the use of Products in combination with any electrical or electronic components, circuits, system assemblies or any other materials or substances or environments. Any advice, recommendations or information given orally or in writing, are not to be construed as an amendment or addition to the above warranty.

See http://www.omron.com/global/ or contact your Omron representative for published information.

Limitation on Liability; Etc.

OMRON COMPANIES SHALL NOT BE LIABLE FOR SPECIAL, INDIRECT, INCIDENTAL, OR CONSEQUENTIAL DAMAGES, LOSS OF PROFITS OR PRODUCTION OR COMMERCIAL LOSS IN ANY WAY CONNECTED WITH THE PRODUCTS, WHETHER SUCH CLAIM IS BASED IN CONTRACT, WARRANTY, NEGLIGENCE OR STRICT LIABILITY.

Further, in no event shall liability of Omron Companies exceed the individual price of the Product on which liability is asserted.

Suitability of Use.

Omron Companies shall not be responsible for conformity with any standards, codes or regulations which apply to the combination of the Product in the Buyer's application or use of the Product. At Buyer's request, Omron will provide applicable third party certification documents identifying ratings and limitations of use which apply to the Product. This information by itself is not sufficient for a complete determination of the suitability of the Product in combination with the end product, machine, system, or other application or use. Buyer shall be solely responsible for determining appropriateness of the particular Product with respect to Buyer's application, product or system. Buyer shall take application responsibility in all cases.

NEVER USE THE PRODUCT FOR AN APPLICATION INVOLVING SERIOUS RISK TO LIFE OR PROPERTY OR IN LARGE QUANTITIES WITHOUT ENSURING THAT THE SYSTEM AS A WHOLE HAS BEEN DESIGNED TO ADDRESS THE RISKS, AND THAT THE OMRON PRODUCT(S) IS PROPERLY RATED AND INSTALLED FOR THE INTENDED USE WITHIN THE OVERALL EQUIPMENT OR SYSTEM.

Programmable Products.

Omron Companies shall not be responsible for the user's programming of a programmable Product, or any consequence thereof.

Performance Data.

Data presented in Omron Company websites, catalogs and other materials is provided as a guide for the user in determining suitability and does not constitute a warranty. It may represent the result of Omron's test conditions, and the user must correlate it to actual application requirements. Actual performance is subject to the Omron's Warranty and Limitations of Liability.

Change in Specifications.

Product specifications and accessories may be changed at any time based on improvements and other reasons. It is our practice to change part numbers when published ratings or features are changed, or when significant construction changes are made. However, some specifications of the Product may be changed without any notice. When in doubt, special part numbers may be assigned to fix or establish key specifications for your application. Please consult with your Omron's representative at any time to confirm actual specifications of purchased Product.

Errors and Omissions.

Information presented by Omron Companies has been checked and is believed to be accurate; however, no responsibility is assumed for clerical, typographical or proofreading errors or omissions.

Precautions on Safety

Regarding the alert symbols and meanings used for the safe uses

In order to use the F3SJ safely, the precautions listed in this manual indicated by alert symbols and descriptions must be followed. Failure to follow all precautions and alerts may result in an unsafe use or operation.

The following indictions and symbols are used for the descriptions.

⚠ WARNING	Indicates a potentially hazardous situation which, if not avoided, will result in minor or moderate injury, or may result in serious injury or death. Additionally there may be significant property damage.

Meanimgs of Alert Symbols

	Indicates prohibited actions.
	Indicates mandatory actions.
	Indicates the risk of electric shock.

Alert Statements in this Manual

For users

⚠ WARNING

The F3SJ must be installed, configured, and incorporated into a machine control system by a sufficiently trained and qualified person. An unqualified person may not be able to perform these operations properly, which may cause a person to go undetected, resulting in serious injury.

For machines

⚠ WARNING

Do not use this sensor for machines that cannot be stopped by electrical control. For example, do not use it for a pressing machine that uses full-rotation clutch. Otherwise, the machine may not stop before a person reaches the hazardous part, resulting in serious injury.

Do not use the auxiliary output or external indicator output for safety applications. Human body may not be detected when F3SJ fails, resulting in serious injury.

For installation

⚠ WARNING

An actual performance is different according to the state of the installation, the user environment, and the application. Make sure to test the operation of the F3SJ after installation to verify that the F3SJ operates as intended. Make sure to stop the machine until the test is complete. Unintended function settings may cause a person to go undetected, resulting in serious injury.

Make sure to install the F3SJ at the safe distance from the hazardous part of the equipment. Otherwise, the machine may not stop before a person reaches the hazardous part, resulting in serious injury.

Install a protective structure so that the hazardous part of a machine can only be reached by a person that passes through the sensor's detection zone. Install the sensors so that part of the person is always present in the detection zone when working in a machine's hazardous zones. If a person is able step into the hazardous zone of a machine and remain behind the F3SJ's detection zone, configure the system with an interlock function that prevents the machine from being restarted. Failure to do so may result in serious injury.

Install the interlock reset switch in a location that provides a clear view of the entire hazardous zone and where it cannot be activated from within the hazardous zone.

The F3SJ cannot protect a person from a projectile exiting the hazardous zone. Install protective cover(s) or fence(s).

The muting and override functions disable the safety functions of the device. You must ensure safety using other method when these functions are operating.

Install muting sensors so that they can distinguish between the object that is being allowed to pass through the detection zone and a person. If the muting function is activated by the detection of a person, it may result in serious injury.

Muting lamps (external indicators) that indicate the state of the muting and override functions must be installed where they are clearly visible to workers from all the operating positions.

Use independent 2 input devices for muting inputs.

You must install F3SJ, muting sensor, and physical barrier so that an operator should not enter hazardous zone.

Install the switch that activates the override and that uses hold-to-run device, such as spring-return key switch, in a location that provides a clear view of the entire hazardous zone and where it cannot be activated from within the hazardous zone. Make sure that nobody is in the hazardous zone before activating the override function.

Install the sensor system so that it is not affected by the reflective surface of the F3SJ.

When using more than 1 set of F3SJ, install them so that mutual interference does not occur, such as by configuring series connections or using physical barriers between adjacent sets.

Make sure that the F3SJ is securely mounted and its cables and connectors are properly secured.

Make sure that foreign material such as water, oil, or dust does not enter the F3SJ or the connector while the cap is removed.

Do not use the sensor system with mirrors in a retro-reflective configuration as shown below.Doing so may hinder detection. It is possible to use mirrors to "bend" the detection zone to a 90-degree angle.

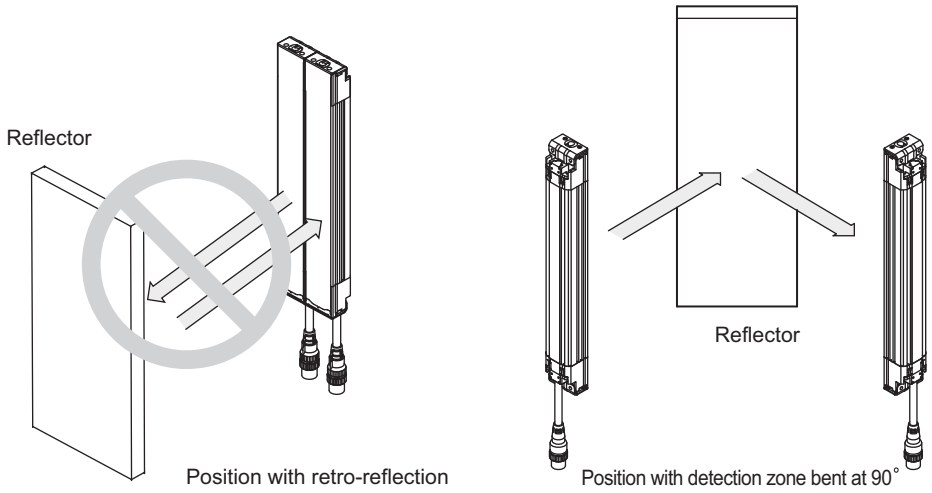

Perform an inspection for all F3SJ as described in "Chapter 5 Checklists". When using series connections, perform inspections for every connected F3SJ.

For wiring

⚠ WARNING

Connect the load between the output and 0V line (PNP output). Connecting the load between the output and +24V line will result in a dangerous condition because operation is reversed to "ON when blocked".

Do not short-circuit the output line to the +24V line. Otherwise, the output is always ON. Also, the 0V of the power supply must be grounded so that output does not turn ON due to grounding of the output line.

Configure the system by using the optimal number of safety outputs that satisfy the requirements of the necessary safety category.

Do not connect each line of F3SJ to a DC power supply of more than 24VDC+20%. Also, do not connect to an AC power supply. Failure to do so may result in electric shock.

For the F3SJ to comply with IEC 61496-1 and UL 508, the DC power supply unit must satisfy all of the following conditions:

- Must be within the rated power voltage (24V DC ± 20%)
- Must have tolerance against the total rated current of devices if it is connected to multiple devices
- Must comply with EMC directives (industrial environment)
- Double or reinforced insulation must be applied between the primary and secondary circuits
- Automatic recovery of overcurrent protection characteristics (reversed L sagging)
- Output holding time must be 20ms or longer
- Must satisfy output characteristic requirements for class 2 circuit or limited voltage current circuit defined by UL508. Refer to p.88 for details.
- Must comply with laws and regulations, regarding EMC and electrical equipment safety, of the country or region where the F3SJ is used (Ex: In EU, the power supply must comply with the EMC Directive and the Low Voltage Directive.)

Double or reinforced insulation from hazardous voltage must be applied to all input and output lines. Failure to do so may result in electric shock.

Extension of the cable must be within a specified length. If it isn't, safety function may not work properly, resulting in danger.

Other

⚠ WARNING

To use the F3SJ in PSDI mode (Reinitiation of cyclic operation by the protective equipment), you must configure an appropriate circuit between the F3SJ and the machine. For details about PSDI, refer to OSHA1910.217, IEC61496-1, and other relevant standards and regulations.

Do not try to disassemble, repair, or modify this product. Doing so may cause the safety functions to stop working properly.

Do not use the F3SJ in environments where flammable or explosive gases are present. Doing so may result in explosion.

Perform daily and 6-month inspections for the F3SJ. Otherwise, the system may fail to work properly, resulting in serious injury.

Precautions for Safe Use

Make sure to observe the following precautions that are necessary for ensuring safe use of the product.

- Thoroughly read this manual and understand the installation procedures, operation check procedures, and maintenance procedures before using the product.
- Loads must satisfy both of the following conditions:
  - -Not short-circuited
  - -Not used with a current that is higher than the rating
- Do not drop the product.
- Dispose of the product in accordance with the relevant rules and regulations of the country or area where the product is used.

Precautions for Correct Use

Observe the precautions described below to prevent operation failure, malfunctions, or undesirable effects on product performance.

■ Installation environment

•Do not install the F3SJ in the following types of environments:
- Areas exposed to intense interference light, such as direct sunlight
- Areas with high humidity where condensation is likely to occur
- Areas where corrosive gases are present
- Areas exposed to vibration or shock levels higher than in the specification provisions
- Areas where the product may come into contact with water
- Areas where the product may get wet with oil that can solve adhesive

•This is a class A product. In residential areas it may cause radio interference, in which case the Responsible Person may be required to take adequate measures to reduce interference.

•Do not use radio equipment such as cellular phones, walkie-talkies, or transceivers near the F3SJ.

•F3SJ can be used at altitudes up to 2,000 meters.

■ Wiring and installation

•Make sure to perform wiring while the power supply is OFF. Otherwise, the F3SJ may fail to operate due to the diagnosis function.

•Do not short-circuit output lines to +24V line. Otherwise a fault of F3SJ may occur.

•When extending the communication line with a cable (twisted-pair wire) other than the dedicated cable (F39-JD□□), use a cable with the same or superior specifications.Connect the shield to the 0V line.

Cable specification (extension cable) p.11

•When replacing the cable connectors with other types of connectors, use connectors that provide a protection grade of IP54 or higher.

•Properly perform the wiring after confirming the signal names of all the terminals.

•Do not operate the control system until 2 seconds or more (2.2 seconds or more in case of series connection) after turning ON the power of the F3SJ.

•Be sure to route the F3SJ cable separate from high-potential power lines or through an exclusive conduit.

•When using a commercially available switching regulator power supply, make sure to ground the FG terminal (frame ground terminal).

- Install the emitter and receiver so that their vertical direction should match.
- If the protective height is 600 mm or more, use intermediate mounting brackets of specified quantities and locations according to the dimensions.
  If the brackets described above are not used, ratings and performance cannot be not met.
- Sharing the power supply with other devices may cause the F3SJ to be affected by noise or voltage drop. It is recommended that this safety component use a dedicated power supply but do not share with other devices.

■ Cleaning

Do not use thinner, benzene, or acetone for cleaning, because they affect the product's resin parts and paint on the case.

■ Object detection

The F3SJ cannot detect transparent and/or translucent objects.

Checking the Contents

Before use, confirm that the items below were shipped with the product.
If you find that an item is missing, please contact your local branch office or distributor.

Product	Quantity
F3SJ-A□□□□P□□-01TS main unit	Emitter x 1, Receiver x 1 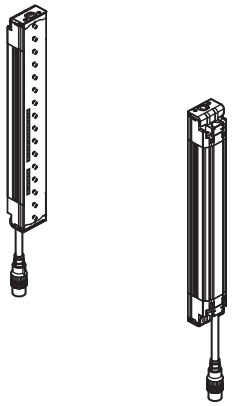
Top/bottom mounting brackets	4 sets 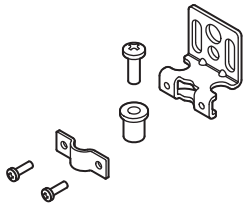
Intermediate mounting brackets	Intermediate brackets are included when the protective height of the F3SJ is 600mm or longer. The number of brackets included depends on the total length of the F3SJ. (4 sets maximum for each emitter/receiver) 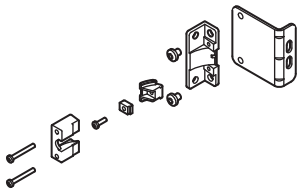
Error mode label	1 (includes Japanese and English)
Instruction sheet	6
Quick installation manual (QIM)	3

How to Read This Manual (Explanation of Symbols)

CHECK!

Indicates the description of an essential point regarding a function, such as an important point regarding operation or advice on how to use it.

Indicates the page number for related content.

Indicates a reference for when there is trouble, or an explanation of difficult words.

Contents

Legislation and Standards i
Terms and Conditions Agreement ii
Precautions on Safety iv
Precautions for Safe Use viii
Precautions for Correct Use viii
Checking the Contents x
How to Read This Manual (Explanation of Symbols) xi

Chapter1 Overview and Specifications 1

Basic Configuration and Names 2
Application Examples 5
Detect the Approach to a Hazardous Zone 5
Using Multiple Sets in Combination 6
For a System in which a Workpiece Crosses Detection Zone (Muting Function) 6
Features 7
Protective Height Available in Incremental Sizes 7
Easy-to-Read Light Level and Error Mode Display 7
Additional Safety Functions 7
Enhanced Mutual Interference Prevention 7
Muting/Override Function are Provided 7
Indicator Display Patterns 8
Internal Indicator for Basic System 8
Internal Indicator for Muting System 9
Display Patterns of the Incident Light Level Indicator 9
Ratings 10
Ratings/Specifications 10
Model Name List/Response Times 12
Power Cable Length 13

Chapter2 System Configuration and Functions 15

How to Select a System 16
System Selection 16
Function List 16
Basic System 17
Wiring Diagrams 17
External Test Function 19
Self-Test Function 20
Auxiliary Output (Non-Safety Output) 22
Resetting Lockout 22

External Device Monitoring Function 23
Muting System 24
Upgrading F3SJ for Muting System 25
Standard Muting Mode 26
Wiring Diagrams 28
Installation Standard for Muting Sensors 30
Installation Example 1 of Standard Muting Mode (using 2 muting sensors) 30
Installation Example 2 of Standard Muting Mode (using 4 muting sensors) 34
Override Function (Dynamic Input) 40
External Test Function 42
Self-Test Function 42
Auxiliary Output (Non-Safety Output) 43
Resetting Lockout 43
External Device Monitoring Function (EDM) 43

Chapter3 Wiring/Installation 45
Installation Conditions 46
Detection Zone and Approach 46
Safety Distance 47
Distance from Reflective Surfaces 51
Mutual Interference Prevention 52
Series Connection 55
Connection Procedure 57
Attaching External Indicators 59
Connection Procedure 59
Output Operation 60
Dimensions 61
When Using Standard Mounting Brackets 61
When Using Optional Mounting Brackets 64
F39-A01Po-PAC External Indicator Set 77
When Using Spatter Protection Covers 77
Mounting a Protect Bar 78
Mounting an Environment-Resistant Case 80
Mounting 82
Top/Bottom Mounting Brackets 82
Intermediate Mounting Brackets 82
Mounting Procedure 83
Adjustment Procedure 86
Wiring 87
Wiring Precautions 87
Power Supply Unit 88

Wiring Procedure 89

Chapter4 Input/Output Circuit and Applications 95

Input/Output Circuit 96
Wiring Examples 97
Using only F3SJ 97
Connecting 2 Muting Sensors 98
Connecting 4 Muting Sensors 99
Connecting to an F3SP-B1P 100
Connecting to an F3SX-E-L2R2 101
Connecting to a G9SA-301 102
Connecting to a G9SA-300-SC 103
Connecting to a G9SB-301-D 104
Connecting to a G9SX-AD322-T15 105
Using a simple wiring connector 106

Chapter5 Checklists 107

Pre-Operation Checklists 108
Checklists 108
Maintenance Checklists 110
Checklists 110

Chapter6 Appendix 113

Troubleshooting 114
Lockout State 114
Problem under other state than lockout 120
Accessories (Sold Separately) 121
Glossary 129
Related Standards 130
International Standards 130
European Standards 130
U.S. Federal Regurations 130
U.S. Standards 130
Canadian Standards 131
Revision History 132

Chapter1 Overview and Specifications

Basic Configuration and Names	2
Application Examples	5
Features	7
Indicator Display Patterns	8
Ratings	10
Ratings/Specifications	10
Model Name List/Response Times	12
Power Cable Length	13

Basic Configuration and Names

This section describes the system configuration and part names of the F3SJ.

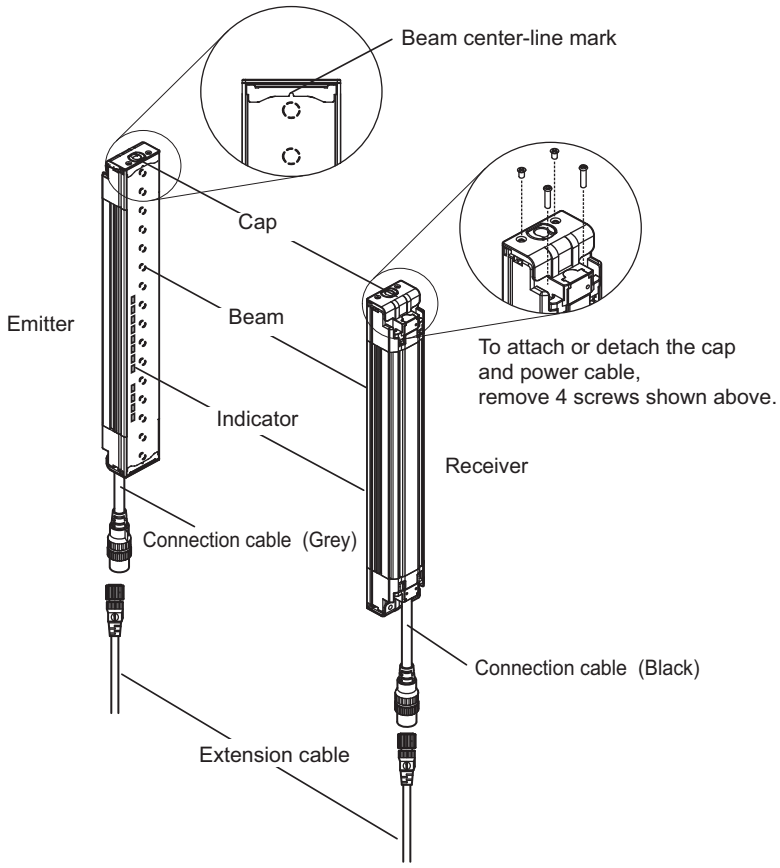

Component	Model name	Description
Emitter, receiver 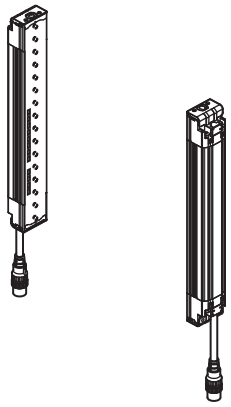	F3SJ-A□□□□P□□-01TS	Select a model name based on the required protective height and detection capability. (Cap and connection cable are included.) The model name can be understood as follows: F3SJ-A□□□□P□□-□-01TS 1 2 3 4 1: Protective height (mm) 2: Output type (P=PNPoutput type) 3: Detection capability (mm) 4: L is emitter, D is receiver, blank is a set of an emitter and a receiver

CHECK!

To distinguish between the emitter and receiver, find the labels attached to the front of the F3SJ. The label on the emitter reads "EMITTER" and the label on the receiver reads "RECEIVER".
These words are printed on the side where the power supply connector is located.

Component		Model name	Description
Extension cable	Cable with connector on one end	F39-JD□A	This extension cable is used to connect the F3SJ to a controller with discrete terminals (e.g. F3SX, G9SA, G9SB, G9SX) or to a safety processing system (e.g. DeviceNet safety). p.121
	Cable with connectors on both ends 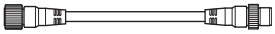	F39-JD□B	This extension cable is used when the length of the connection cable is insufficient or for plug and play connection to the F3SP-B1P controller. The length can be selected. p.121
	Cable with connectors on both ends 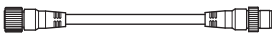	F39-JC□C	This connection cable is used for plug and play connection to the G9SA-300-SC controller. The length can be selected.
Simple Wiring Connector 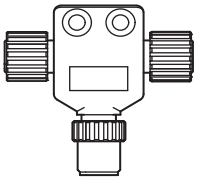		F39-CN5	This connector is used for a reduced wiring system, in combination with the following cables for reduced wiring system.
Cable for reduced wiring (2 cables per set, for emitter and receiver) 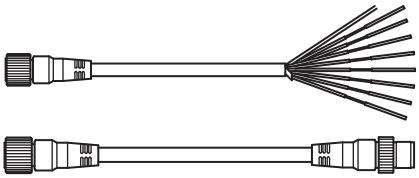		F39-JD□□□□BA	These cables are used for a reduced wiring system, a set of connector cables for emitter's ends and receiver's ends. p.122

Components to be selected if necessary

Component	Model name	Description
Optional bracket	-	Use this bracket (sold separately) for dedicated applications. p.64
Series connection cable for close contact 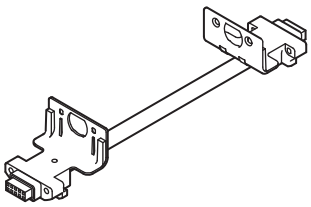	F39-JJR06L F39-JJR15L	Required for connecting multiple sets of F3SJ in a series. It is used when you wish to perform series connection with minimum length. Connection Procedure p.57
Series connection cable for extension 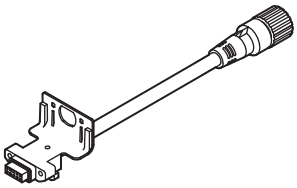	F39-JJR3W	Required for connecting multiple sets of F3SJ in a series. The F39-JJR3W can be used for extension with cable with connectors on both ends(F39-JD□B). Connection Procedure p.58
Key cap for muting 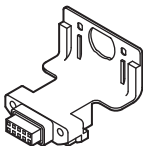	F39-CN6	Required when using muting function. (Case color : Orange) Muting System p.24
Test input logic switching cap 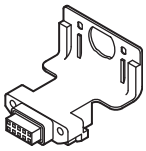	F39-CN7	Test input logic can be reversed by attaching it to an emitter. (Case color : Gray) This function is available for F3SJ-A□□□□P□□-01TS and F3SJ-A□□□□N□□-01T only.
Indicator cable 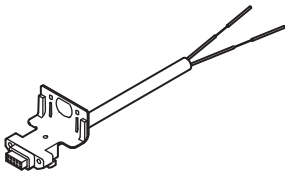	F39-JJ3N F39-A01P□-PAC	Required when attaching external indicator(s) to the F3SJ. Attaching External Indicators p.59

Application Examples

Detect the Approach to a Hazardous Zone

The F3SJ should be installed where workers require frequent access in order to perform tasks such as maintenance, and where physical barriers are difficult to install.

■ Detect the Approach of a Person

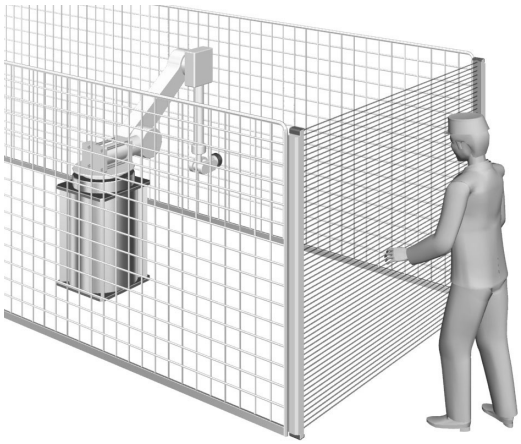

■ Detect a Person's Limbs

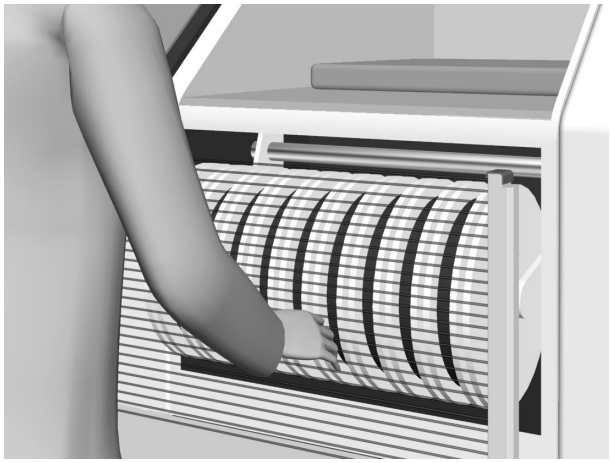

Using Multiple Sets in Combination

By installing sensors on both sides of a machine as well as in front, you can move workpieces in and out more efficiently than when a physical barrier is installed. If the sensors are aligned in a U-shape, series-connection cables can be used between sets (up to 3 sets), so that only one control device is used, drastically reducing the amount of wiring in the panel.

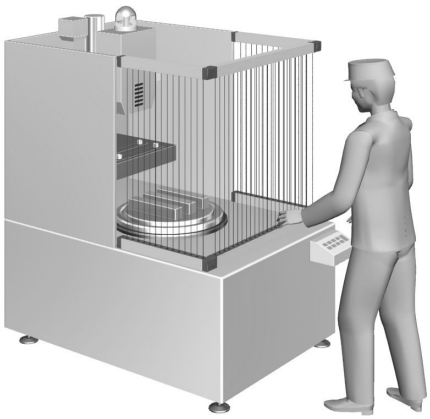

For a System in which a Workpiece Crosses Detection Zone (Muting Function)

Enter of a workpiece can be detected by a sensor and the detection zone can be temporarily disabled only while the workpiece is crossing the whole zone. This function is called muting.
Muting is when a work piece is allowed to enter into a dangerous zone without tripping the F3SJ and stopping the process. Muting sensors are installed and arranged as to detect the work piece and not a human entering the zone.

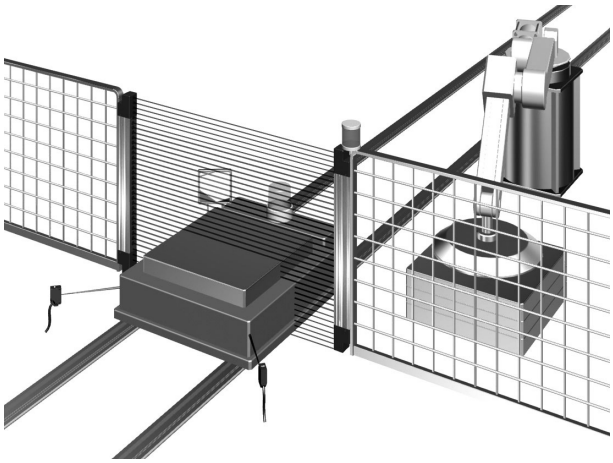

Features

Protective Height Available in Incremental Sizes

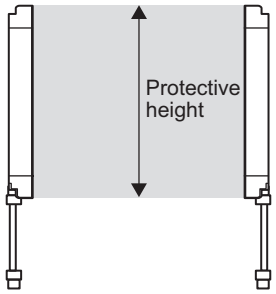

Series	Protective height	Detection capability
F3SJ-A□□□□P20-01TS	245mm to 2,495mm (in 15mm increments)	Dia. 20mm
F3SJ-A□□□□P25-01TS	260mm to 2,500mm (in 20mm increments)	Dia. 25mm

Easy-to-Read Light Level and Error Mode Display

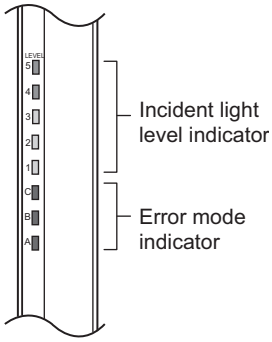

Beam alignment is simplified using 5 LEDs that display the incident light level.
Error status is indicated on 3 additional LEDs when an error occurs.

Indicator Display Patterns p.8

Additional Safety Functions

•External test (light emission stop)
•External device monitoring function

Enhanced Mutual Interference Prevention

When the series connection function is used, mutual interference is prevented in up to 240 beams in 3 sets.
When F3SJ are used individually, the newly designed interference light detection and cycle shift algorithm prevents mutual interference in up to 3 sets.

Muting/Override Function are Provided

An F3SJ by itself can operate with muting or override without using a controller.

Definition of muting function and override function p.129

Indicator Display Patterns

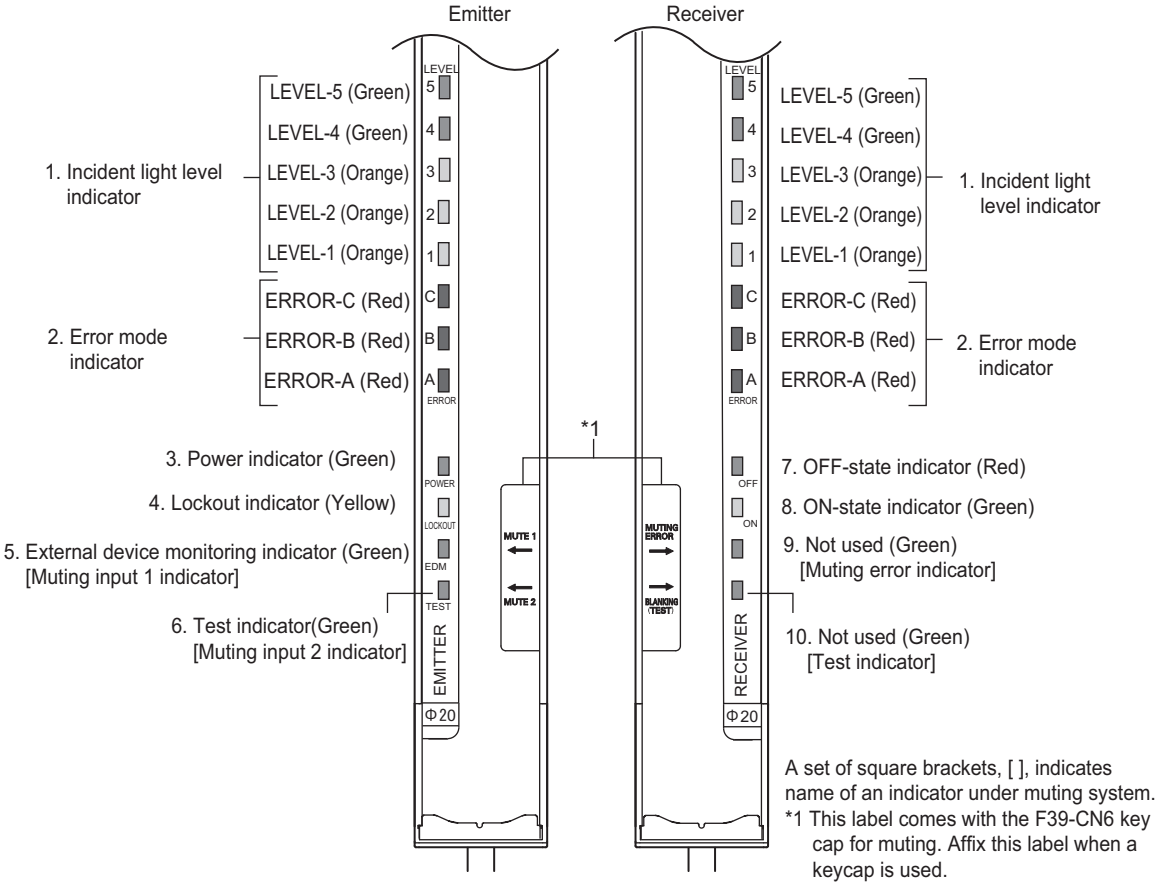

Internal Indicator for Basic System

Shown below are indication statuses of F3SJ's internal indicator when you purchased.

No.	Indicators		ON/ Blinking	Description
1	Incident light level indicator	LEVEL-1 to 5	ON	Indication status of LEVEL-1 to 5 shows the incident light level status of the F3SJ.
2	Error mode indicator	ERROR-A to C	ON/ Blinking	Turns ON or blinks only when the F3SJ enters lockout, and the cause of the error is indicated by the status of ERROR-A to C indicators.When F3SJ are series-connected, the error mode indicator lamps turn ON or blink according to the details of each error. Affix the error mode label (included) near the F3SJ to allow for quick troubleshooting when errors occur. For details of the error mode, see "Chapter 6 Troubleshooting".
3	Power indicator	POWER	ON	Turns ON while the power is ON.
4	Lockout indicator	LOCKOUT	Blinking	Blinks when in lockout.
5	External device monitoring indicator	EDM	ON	Turns ON when an input is given to external device monitoring input.
6	Test indicator	TEST	Blinking	Blinks when external test is being performed.
7	OFF-state indicator	OFF	ON	Turns ON when safety outputs are OFF.
			Blinking	Blinks when in lockout.
8	ON-state indicator	ON	ON	Turns ON when safety outputs are ON.
9	–	–	–	–
10	–	–	–	–

Internal Indicator for Muting System

Shown below are internal indicator statuses while the keycap for muting is being attached.

No.	Indicators		ON/ Blinking	Description
1	Incident light level indicator	LEVEL-1 to 5	ON	Indication status of LEVEL-1 to 5 shows the incident light level status of the F3SJ.
2	Error mode indicator	ERROR-A to C	ON/ Blinking	Turns ON or blinks only when the F3SJ enters lockout, and the cause of the error is indicated by the status of ERROR-A to C indicators.When F3SJ are series-connected, the error mode indicator lamps turn ON or blink according to the details of each error. Affix the error mode label (included) near the F3SJ to allow for quick troubleshooting when errors occur. For details of the error mode, see "Chapter 6 Troubleshooting".
3	Power indicator	POWER	ON	Turns ON while the power is ON.
4	Lockout indicator	LOCKOUT	Blinking	Blinks when in lockout.
5	Muting input 1 indicator	MUTE1	ON	Turns ON when an input is given to muting input 1.
			Blinking	Blinks during muting/override.
6	Muting input 2 indicator	MUTE2	ON	Turns ON when an input is given to muting input 2.
			Blinking	Blinks during muting/override.
7	OFF-state indicator	OFF	ON	Turns ON when safety outputs are OFF.
			Blinking	Blinks when in lockout.
8	ON-state indicator	ON	ON	Turns ON when safety outputs are ON.
9	Muting error indicator	MUTING ERROR	ON	Turns ON when a muting error occurs.
10	Test indicator	TEST	Blinking	Blinks when external test is being performed.

For an explanation of terminology such as function names, refer to the glossary.

Glossary p.129

Display Patterns of the Incident Light Level Indicator

incident light level indicator		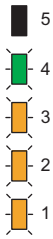	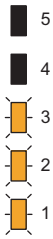			
Safety Output	ON	ON	ON	OFF	OFF	OFF
Incident light level	170% or higher	Less than 170% ~ 130%	Less than 130% ~ 100%	Less than 100% ~ 75%	Less than 75% ~ 50%	Less than 50%

CHECK!

Operation is possible with incident light level of 100% or more, but to ensure stability, operate when all incident light level indicators

Ratings

Ratings/Specifications

In the model names in this table, the □□□□ contain the 4-digit number indicating the protective height (mm).

		F3SJ-A□□□□P20-01TS	F3SJ-A□□□□P25-01TS
Detection capability		Opaque objects	Opaque objects
		Diameter 20mm	Diameter 25mm
Beam gap		15mm	20mm
Number of beams		16 to 166	13 to 125
Protective height		245 to 2,495mm	260 to 2,500mm
Lens diameter		Diameter 5mm	
Operating range		0.2 to 9m (for protective height up to 1649 mm) 0.2 to 7m (for protective height 1655 mm or greater)	
Response time		ON to OFF: 10ms to 22.5ms max., OFF to ON: 40ms to 90ms max. (when incidence is stable). Refer to p.12 for details.	
Startup waiting time		2s max. (2.2s max in case of series connection)	
Power supply voltage(Vs)		24VDC ± 20% (ripple p-p10% max.)	
Current consumption (no load)	Emitter	Up to 50 beams: 76 mA max., 51 to 100 beams: 106 mA max., 101 to 150 beams: 130 mA max., 151 to 200 beams: 153 mA max.	
	Receiver	Up to 50 beams: 68 mA max., 51 to 100 beams: 90 mA max., 101 to 150 beams: 111 mA max., 151 to 200 beams: 128 mA max.	
Light source		Infrared LED (870nm wavelength)	
Effective aperture angle (EAA)		Within ±2.5 ° for the emitter and receiver at a detection distance of at least 3 m according to IEC61496-2	
Safety outputs(OSSD)		PNP transistor outputs x 2, Load current 300mA max, Residual voltage 2V max. (except for voltage drop due to cable extension)(including inductance load), Maximum capacity load 2.2 µF, leakage current 1 mA max. (This may be different from previously used logic (ON/OFF) because safety circuit is used.)	
Auxiliary output 1 (Non-safety output)		PNP transistor output x 1, Load current 300mA max., Residual voltage 2V max. (except for voltage drop due to cable extension), leakage current 1mA max.	
External indicator output (Non-safety output)		Connectable external indicator - Incandescent lamp : 24VDC, 3 to 7W - LED lamp : Load current 10 to 300mA max. Leakage current 1mA max. (An indicator cable F39-JJ3N or F39-A01P□-PAC is required when using an external indicator.)	
Output operation mode		Safety outputs : ON when receiving light Auxiliary output 1 : Reverse output of safety output External indicator output 1: Reverse output of safety output (for basic system), ON during muting/override (for muting system) External indicator output 2: ON in lockout (for basic system), ON during muting/override (for muting system)	
Input voltage		Test input: ON voltage: 0 to 1.5V , or open OFF voltage: 9V to Vs*(short-circuit current: approx. 2.0mA) Reset input, Muting input ON voltage: 9V to Vs*(short-circuit current: approx. 2.0mA) OFF voltage: 0 to 1.5V , or open External device monitoring input is: ON voltage: 9V to Vs*(short-circuit current: approx. 3.5mA) OFF voltage: open * Vs here means the voltage value under use environment.	

		F3SJ-A□□□□P20-01TS	F3SJ-A□□□□P25-01TS
Indicators	Emitter	Incident light level indicators (green LED x 2, orange LED x 3): ON based on the amount of incident light Error mode indicators (red LED x 3): Blink to indicate error details Power indicator (green LED x 1): ON while power is ON Lockout indicator (yellow LED x 1): Blinks when in lockout External device monitoring indicator (muting input 1 indicator), Test indicator (muting input 2 indicator) (green LED x2): ON/Blink according to function	
	Receiver	Incident light level indicators (green LED x 2, orange LED x 3): ON based on the amount of incident light Error mode indicators (red LED x 3): Blink to indicate error details OFF-statet indicator (red LED x 1): ON when safety outputs are OFF/ Blinks when in lockout ON-state indicator (green LED x 1): ON when safety outputs are ON Muting error indicator, Test indicator (green LED x 2): ON/Blink according to function	
Mutual interference prevention function		Interference light avoidance algorithm	
Series connection		Time division emission by series connection - Number of connections: Up to 3 sets - Total number of beams: Up to 240 - Cable length between sensors: 15 m max. (not including series connection cable (F39-JJR□L or F39-JJR3W) and power cable) Lockout occurs when: - Number of connected sensors or total number of beams of them exceed the limits described above - Other sensor than -01TS type is attached to the series connection	
Test function		- Self-test (After power ON, and during operation) - External test (light emission stop function by test input)	
Safety-related functions		- External device monitoring - Muting (Override function included;keycap for muting F39-CN6 required)	
Connection method		Connector method (M12, 8-pin)	
Protection circuit		Output short-circuit protection, and power supply reverse polarity protection	
Ambient temperature		During operation: -10 to 55°C (without freezing), During storage: -30 to 70°C	
Ambient humidity		During operation: 35 to 85%RH (no condensation), During storage: 35 to 95%RH	
Ambient light intensity		Incandescent lamp: receiving-surface light intensity of 3,000 lx max., Sunlight: receiving-surface light intensity of 10,000 lx max.	
Insulation resistance		20MΩ or higher (500VDC)	
Dielectric strength voltage		1, 000VAC, 50/60Hz, 1min	
Degree of protection		IP65 (IEC60529)	
Vibration resistance		Class 3M4 (IEC TR 60721-4-3) Operation limit: 5~150Hz, Multiple amplitude of 7 mm, Acceleration of 1G, 10 sweeps each in X, Y, and Z directions (no delay at resonant frequencies)	
Shock resistance		Class 3M4 (IEC TR 60721-4-3) Operation limit: Acceleration of 15G, Pulse duration of 6ms, 100 shocks for each in X, Y, and Z directions (600 shocks in total)	
Connection cable, Series connection cable (F39-JJR□L, JJR3W)		Dia. 6 mm, 8-wire (0.15mm^2 x 8) with braided shield, Allowable bending radius R5mm	
Extension cable (F39-JD□A, JD□B, JC□C)		Dia. 6.6 mm, 8-wire (0.3mm^2 x 4P, conductor resistance 0.058 ohm/m), with braided shield, Allowable bending radius of R36mm. (To extend a cable, use an equivalent or higher-performance cable (twisted-pair wire) , and do not use the cable in the same duct as that for high-voltage cables or power cables) For details about extension lengths (power cable length) p.13 For details about twisted pair wire (single connector cable) p.89	
Material		Casing (including metal parts on both ends): Aluminum, zinc die-cast Cap: ABS resin Optical cover: PMMA resin (acrylic) Cable: Oil resistant PVC	

	F3SJ-A□□□□P20-01TS	F3SJ-A□□□□P25-01TS
Weight (packaged)	- F3SJ-A□□□□P20-01TS/ F3SJ-A□□□□P25-01TS Weight (g)=(protective height) x 1.5+ α The values for α are as follows: When protective height is between 245 and 596mm, α=1100 When protective height is between 600 and 1130mm, α=1500 When protective height is between 1136 and 1658mm, α=2000 When protective height is between 1660 and 2180mm, α=2400 When protective height is between 2195 and 2500mm, α=2600	
Accessories	Instruction sheet, top and bottom mounting brackets, intermediate mounting brackets (*), error mode label, Quick installation manual(QIM) * The number of intermediate mounting brackets depends on the total length of the F3SJ. - F3SJ total length is from 600 to 1,130mm: 1 set for each the emitter and receiver is included - F3SJ total length is from 1136 to 1,658mm: 2 sets for each the emitter and receiver are included - F3SJ total length is from 1660 to 2,180mm: 3 sets for each the emitter and receiver are included - F3SJ total length is from 2195 to 2500mm: 4 sets for each the emitter and receiver are included	
Applicable standards	IEC61496-1, EN61496-1, UL61496-1 Type 4ESPE (Electro-Sensitive Protective Equipment) IEC61496-2, EN61496-2, UL61496-2 Type 4AOPD (Active Opto-electronic Protective Devices) IEC61508, EN61508 SIL3, EN ISO 13849-1 (Category 4, PL e), ISO 13849-1 (Category 4, PL e)	
Proof test interval T_1 Mission time T_M	20 years (IEC 61508, ISO 13849-1)	
Safety-related characteristic data (EN 61508:2010)	See http://www.fa.omron.co.jp/safety_6en/	

Model Name List/Response Times

F3SJ-A□□□□P20-01TS	F3SJ-A□□□□P25-01TS	Number of beams	Response time (ON to OFF)	Response time (OFF to ON)
-	F3SJ-A0480P25-01TS	24 beams	11ms	44ms
F3SJ-A0470P20-01TS	F3SJ-A0620P25-01TS	31 beams	12ms	48ms
-	F3SJ-A0700P25-01TS	35 beams	12ms	48ms
-	F3SJ-A0780P25-01TS	39 beams	12ms	48ms
-	F3SJ-A0960P25-01TS	48 beams	13ms	52ms
F3SJ-A0950P20-01TS	F3SJ-A1260P25-01TS	63 beams	14ms	56ms
-	F3SJ-A1520P25-01TS	76 beams	15ms	60ms
-	F3SJ-A1580P25-01TS	79 beams	15ms	60ms
F3SJ-A1250P20-01TS	-	83 beams	17.5ms	70ms
F3SJ-A1505P20-01TS	-	100 beams	17.5ms	70ms

For series connections, use the calculations below.

When 2 sets are series-connected:

•Response time (ON to OFF) :Response time of primary sensor + Response time of secondary sensor 1 -1 (ms)

•Response time (OFF to ON) :Response time (ON to OFF) x 4 (ms)

When 3 sets are series-connected:

•Response time (ON to OFF) :Response time of primary sensor + Response time of secondary sensor 2 + Response time of 3rd unit - 5 (ms)

•Response time (OFF to ON) : Smaller value of response time (ON to OFF) x 5 (ms) or 200ms

Designation of F3SJ in series connection: p.55

Power Cable Length

Extension of power cable must be the length shown below or shorter:

In case F3SJ is directly connected to external power supply, or connected to G9SA-300-SC

Condition	Single	2 connected	3 connected
Incandescent display lamps are used by auxiliary output and/or external indicator output	45m	40m	30m
Incandescent display lamps are not used *	100m	60m	45m

When connected to F3SP-B1P

Condition	Single	2 connected	3 connected
Incandescent display lamps are - used by external indicator output 2	40m	30m	25m
Incandescent display lamps are - used by external indicator output 1and/or, - used by auxiliary output 1	60m	45m	30m
Incandescent display lamps are not used *	100m	60m	45m

* The F39-A01P□-PAC Dedicated External Indicator Set uses LEDs. Refer to the cable extension lengths for "Incandescent display lamps are not used".

⚠ WARNING

Extension of the cable must be within a specified length. If it isn't, safety function may not work properly, resulting in danger.

Chapter2 System Configuration and Functions

How to Select a System 16

System Selection 16

Function List 16

Basic System 17

Wiring Diagrams 17

External Test Function 19

Self-Test Function 20

Auxiliary Output (Non-Safety Output) 22

Resetting Lockout 22

External Device Monitoring Function 23

Muting System 24

Upgrading F3SJ for Muting System 25

Standard Muting Mode 26

Wiring Diagrams 28

Installation Standard for Muting Sensors 30

Installation Example 1 of Standard Muting Mode (using 2 muting sensors) 30

Installation Example 2 of Standard Muting Mode (using 4 muting sensors) 34

Override Function (Dynamic Input) 40

External Test Function 42

Self-Test Function 42

Auxiliary Output (Non-Safety Output) 43

Resetting Lockout 43

External Device Monitoring Function (EDM) 43

How to Select a System

System Selection

The required system configuration depends on the functions to be used. Decide the system to use based on the following:

When not using the muting function ... Basic system
When using the muting function ... Muting system

Function List

✓: Available
–: Unavailable

Function	Basic system (Factory settings)	Muting system
External test function	✓ (p.19)	✓ (p.42)
Auxiliary output	✓ (p.22)	✓(p.43)
External indicator output	✓	✓
External device monitoring function	✓ (p.23)	✓ (p.43)
Muting function	–	✓ (p.26)

Basic System

Basic system indicates the F3SJ with its default factory settings.
The basic system provides basic safety light curtain functions. Most functions can be used without performing additional configuration.

Wiring Diagrams

■ Wiring using external device monitoring function

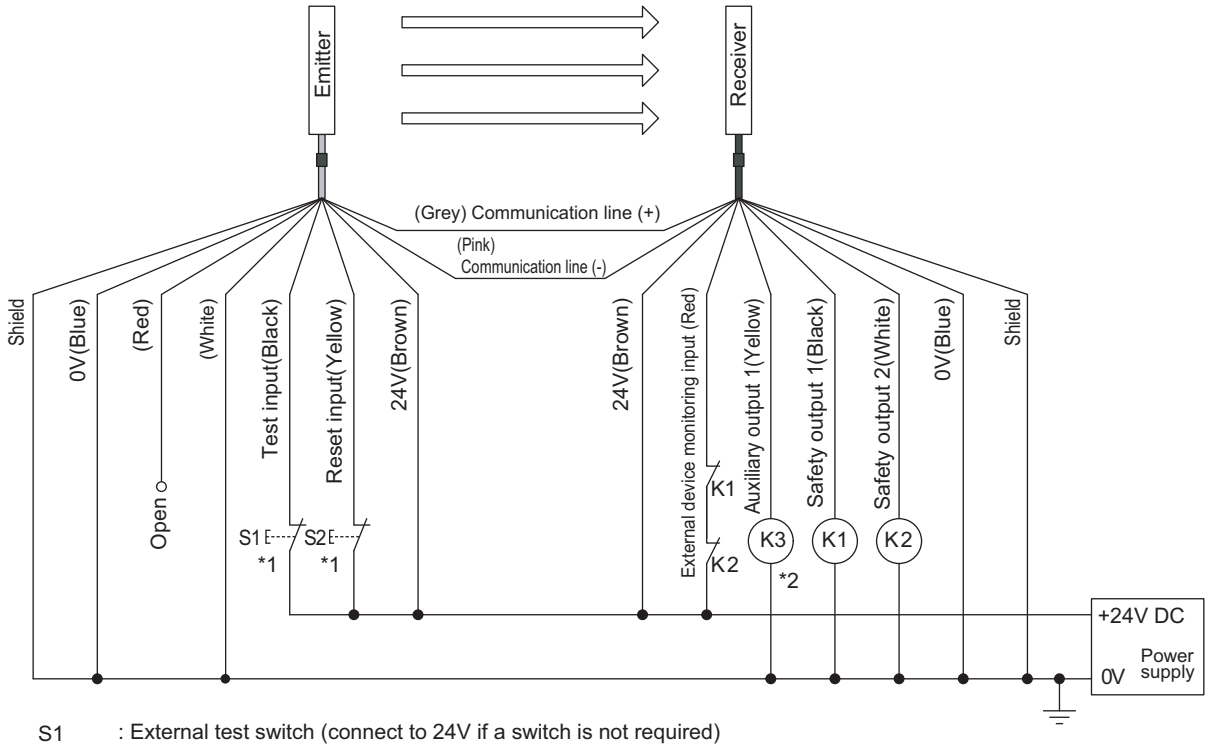

S1 : External test switch (connect to 24V if a switch is not required)
S2 : Lockout reset switch (connect to 24V if a switch is not required)
K1, K2 : Relay or other device that controls hazardous parts of the machine
K3 : Load or PLC, etc. (for monitoring)

*1 Use a switch for micro loads (Input specifications: 24V, 1.0mA or less)
*2 F3SJ can operate even if K3 and K4 are not connected

CHECK!

Test input logic can be reversed by attaching a test input logic switching cap F39-CN7 to an emitter.

■ Wiring When External Device Monitoring Function Is Not Used

The external device monitoring function is disabled by connecting auxiliary output 1 and external device monitoring input as shown below.

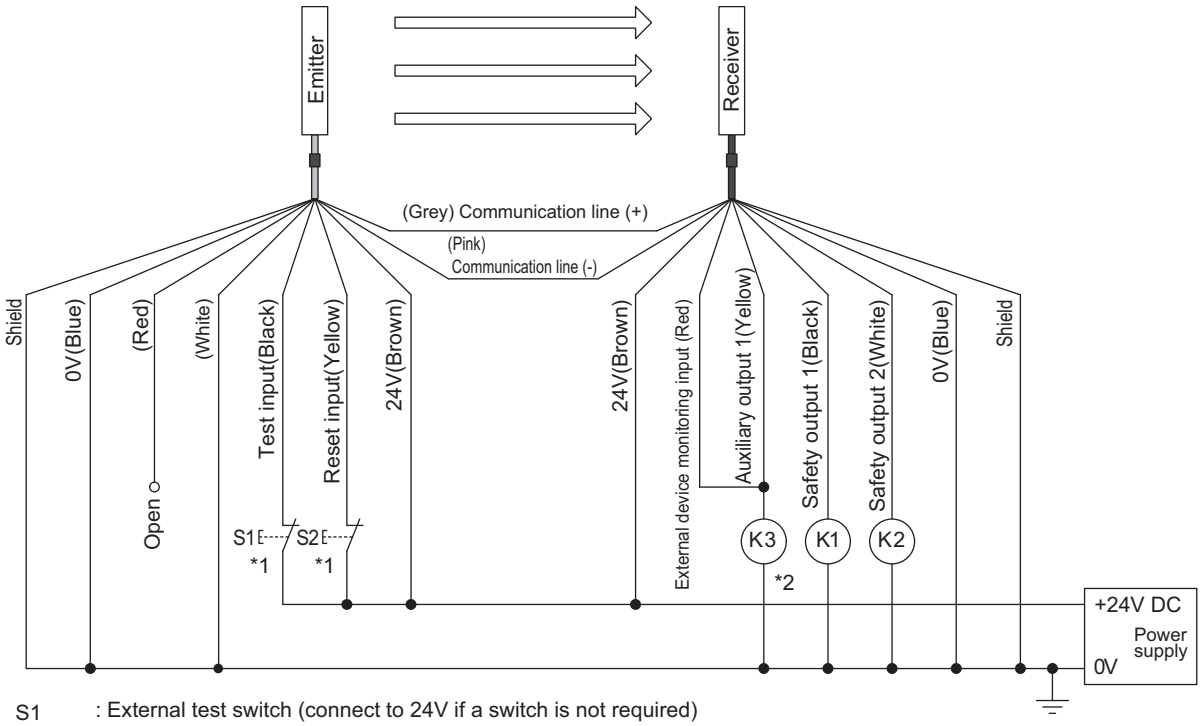

S1 : External test switch (connect to 24V if a switch is not required)
S2 : Lockout reset switch (connect to 24V if a switch is not required)
K1, K2 : Relay or other device that controls hazardous parts of the machine
K3 : Load or PLC, etc. (for monitoring)

*1 Use a switch for micro loads (Input specifications: 24V, 1.0mA or less)
*2 F3SJ can operate even if K3 is not connected. If K3 is not required, connect auxiliary output 1 to external device monitoring input only.

CHECK!

Test input logic can be reversed by attaching a test input logic switching cap F39-CN7 to an emitter.

■ Ref.: Minimum Wiring Required to Check the Operation of the F3SJ

(Wiring for deactivated external device monitoring function)

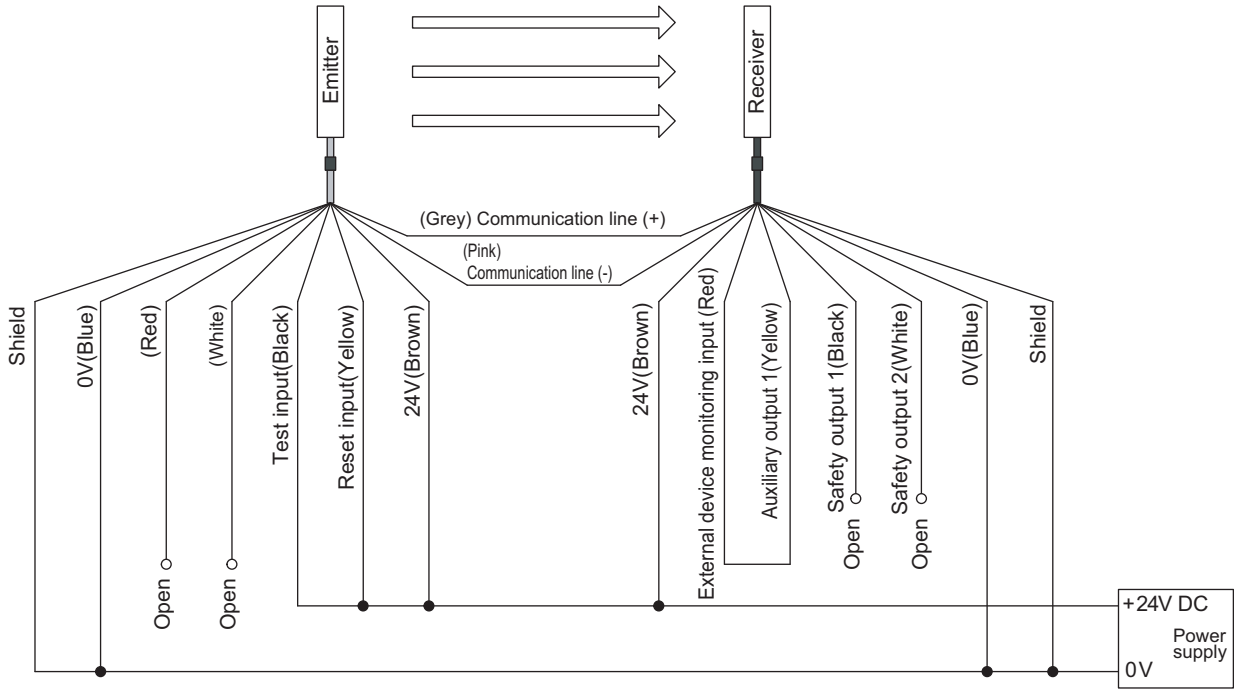

External Test Function

This function forcibly stops the emission using an external signal. It can be used to verify that a safety system should properly stop when F3SJ is interrupted.

To stop the emission, open the test input line of the emitter or apply 0-1.5V. The voltage must be applied for a period 4 times that of Toff or longer.

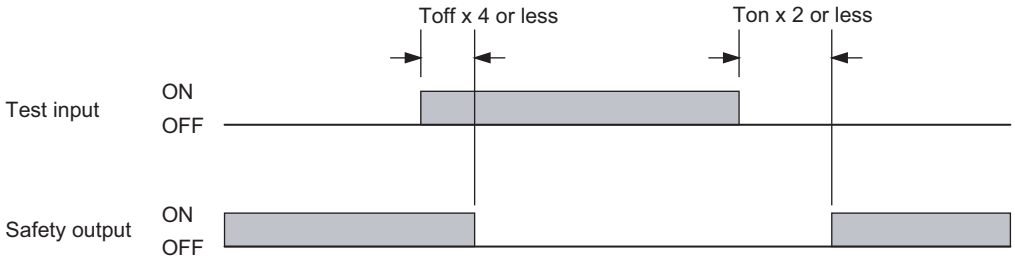

Ton: Response time of safety output's OFF to ON, Toff: Response time of safety output's ON to OFF

Response time p.12

CHECK!

Test input logic can be reversed by attaching a test input logic switching cap F39-CN7(case color : gray) to an emitter. (Emission is stopped by 24V short circuit)

This function is available for F3SJ-A□□□□P□□-01TS and F3SJ-A□□□□N□□-01T only.

■ Operation of the F3SJ's Indicators When External Test Function is Performed

Test indicator blinks when voltage is applied to the test input.

Self-Test Function

The F3SJ performs the self-test when power is turned ON (within 2 second, or 2.2 seconds in case of series connection) to check for errors. Also, it regularly performs the self-test (within the response time) while operating.

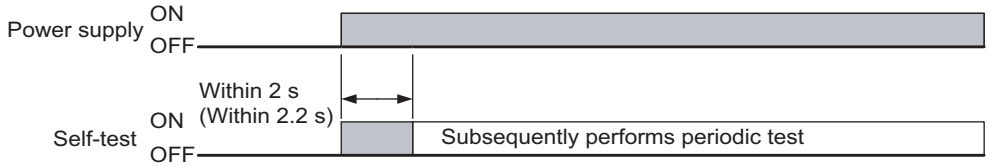

If an error is found in the self-test, the F3SJ enters lockout state, keeps the safety outputs in the OFF state, and indicates the error at the same time.

■ Self-Test Details

The self-test detects the types of errors described below.

Emitter
•Failure of emitter element or circuit
•CPU failure
•Broken or short-circuited cable

Receiver
•Abnormal external power supply voltage
•Failure of internal power supply circuit
•Failure of receiver element or detection circuit
•CPU failure
•Memory failure
•Incidence of disturbance light
•Failure of safety output circuit
•Broken or short-circuited cable

Error indication patterns and causes of errors p.114

How to reset lockout: See p.22 for basic system and p.43 for muting system

For information about lockout, see p.129

■ Waveform of Safety Outputs

When the F3SJ is receiving light, the safety outputs cyclically turn OFF as shown below to test the output circuit. When this OFF signal is fed back, the output circuit is diagnosed as normal. If the output signal does not include an OFF pulse signal, the receiver diagnoses a failure in the output circuit or wiring, and it enters lockout state. (See the table below.)

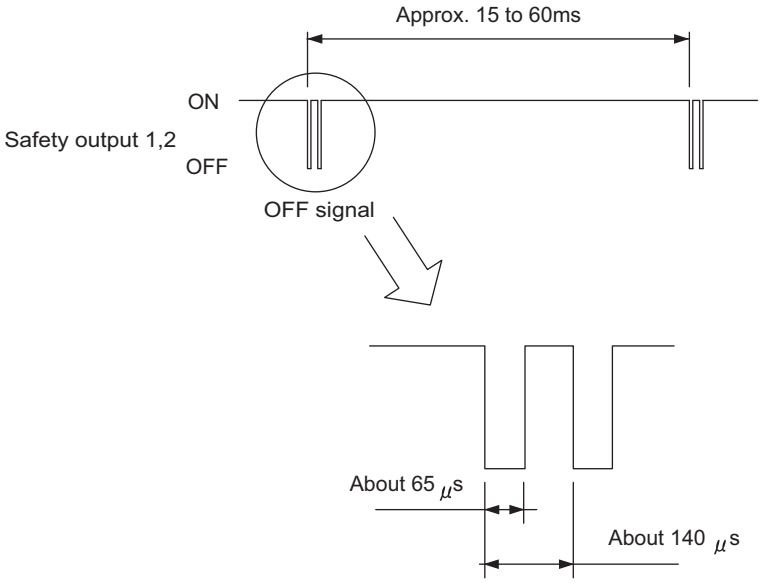

Auxiliary Output (Non-Safety Output)

The auxiliary output is used to monitor the status of the F3SJ. This output can be connected to a device such as a relay, indication lamp, programmable controller, etc.

⚠ WARNING

Do not use the auxiliary output or external indicator output for safety applications.
Human body may not be detected when F3SJ fails, resulting in serious injury.

The output operation mode for auxiliary output is as follows:
•Auxiliary output 1: Inverse of safety output signals

CHECK! Auxiliary output 1 is load current 300mA max.

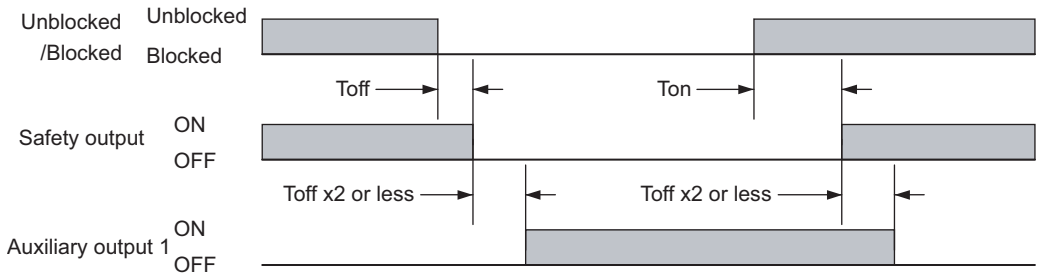

Ton: Response time of safety output's OFF to ON, Toff: Response time of safety output's ON to OFF

See p.12 for response time

Resetting Lockout

When the cause of the lockout is removed, the lockout condition can be released by using either of the following methods.
•Cycle the power back ON
•Reset input
Set the reset line open or to 0 to 1.5V for 100ms or longer, and then apply 9 to 24V again (pin 4/ yellow).

CHECK! Lockout due to a communication error, emitter A blinking error and an emitter/receiver ABC blinking error may not be released by a reset input.

External Device Monitoring Function

This function detects malfunctions, such as welding, in external relays (or contactors) that control the hazardous zone of a machine.

This function constantly monitors that a specified voltage is applied to the receiver's external device monitoring input line, and enters lockout state when an error occurs. The relay's operational delay can be up to 0.3s without being evaluated as an error.

For example, if the (N.C.) contact is not closed and a specified voltage is not applied to the external device monitoring line within 0.3s after the safety outputs turn from ON to OFF, it is evaluated as an error and enters a lockout state.

To utilize this function properly, use safety relays and contactors that have forcibly guided or mechanically linked contact structure.

■ Wiring

Perform wiring so that 9 to 24V is applied to the external device monitoring line via the external relay's normally closed (N.C.) contact.

When external device monitoring function is not being used, apply auxiliary output 1 to the external device monitoring input.

- Wiring when external device monitoring function is used p.17
- Wiring when external device monitoring function is not used p.18

■ Timing Chart

The F3SJ reads out a device monitoring input value 0.5s or later after the power of the F3SJ is turned ON. If the status of the safety outputs is changed back to the original status within the allowable delay time, the F3SJ will not enter the lockout state.

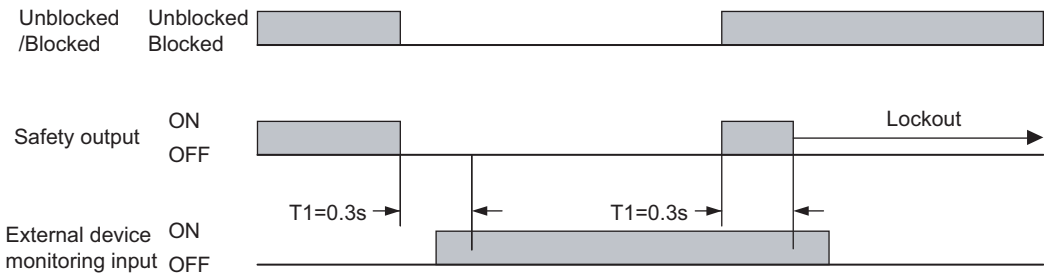

T1: Allowable delay time

■ Operation of the F3SJ's Internal Indicators When External Device Monitoring Function is Performed

When an input is applied to the external device monitoring input, the external device monitoring indicator turns ON.

Muting System

The muting function temporarily disables the safety function of the F3SJ, keeping the safety outputs ON even if beams are blocked. This makes it possible to install safety light curtains for AGV passage, enabling both safety and productivity. When muting, the muting indicator blinks to notify people in the surrounding zone that the safety functions are disabled.

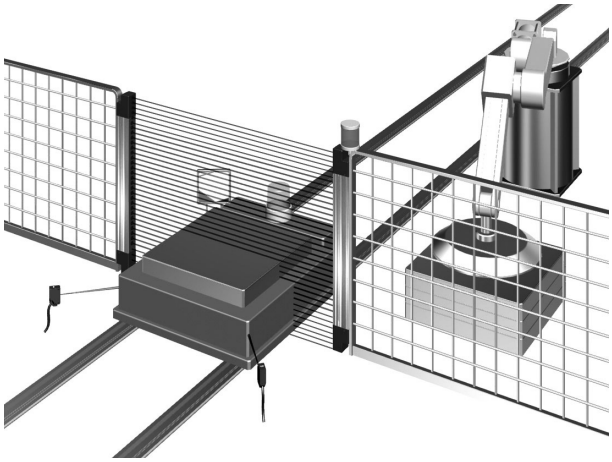

⚠ WARNING

The muting and override functions disable the safety functions of the device. You must ensure safety using other method when these functions are operating.

Muting sensors must be installed so that they can distinguish between the object that is being allowed to pass through the detection zone and a person.
If the muting function is activated by detection of a person, it may result in serious injury.

Muting lamps (external indicators) that indicate the state of the muting and override functions must be installed where they are clearly visible to workers from all the operating positions.

Upgrading F3SJ for Muting System

1. Remove the caps of the emitter and receiver.(driver comes with key cap for muting)
2. Install a muting lamp (external indicator) on either the emitter or the receiver.
3. Attach the key cap for muting to the emitter/receiver on which the muting lamp (external indicator) was not installed.

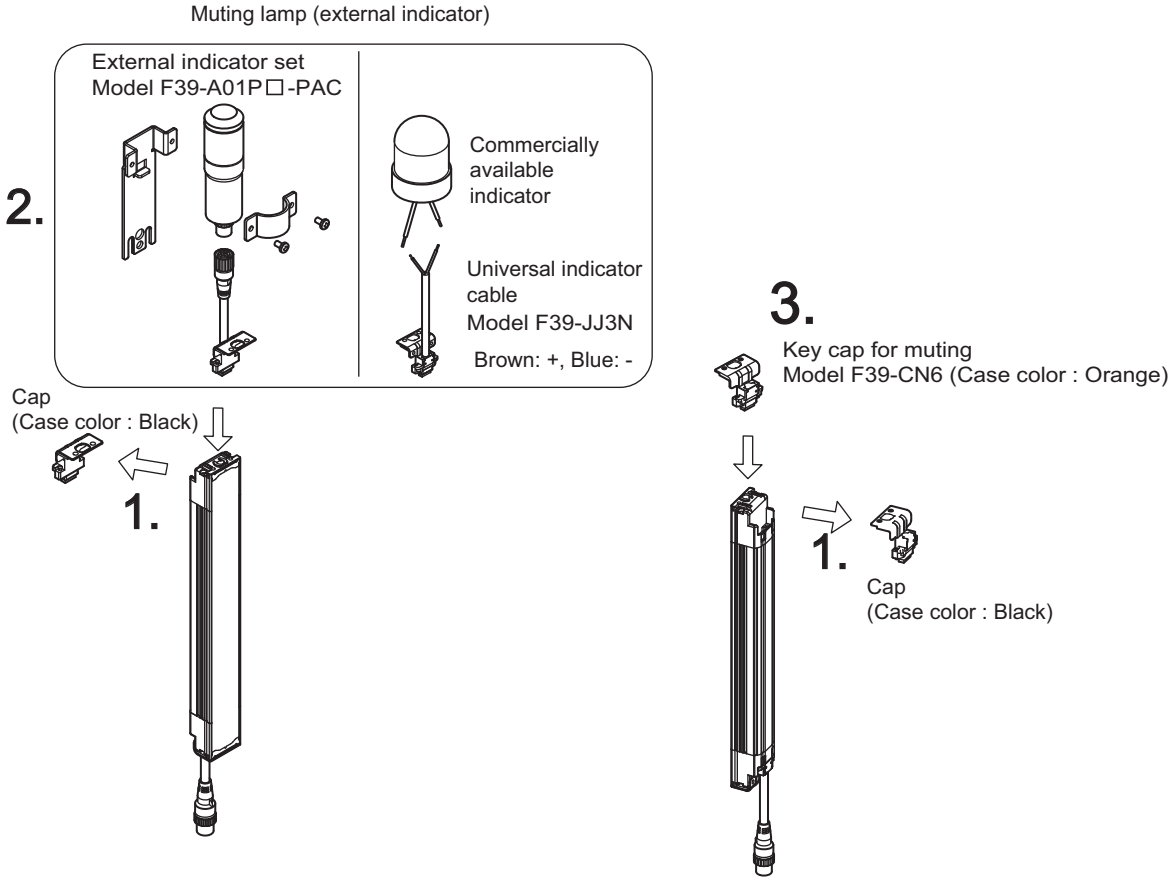

■ Muting Sensor

The muting sensor is the sensor that is the trigger for temporarily disabling the F3SJ's safety functions. Through-beam or retro-reflective photoelectric sensors, proximity sensors, or limit switches can be used as muting sensors. (recommendation: OMRON E3Z series, E2E series(3-wire type), D4N series) Use 3-wire type PNP output or N.O. type contact. Two-wire type sensor cannot be used.

■ Muting Lamp (External Indicator)

You may need a muting lamp depending on your application or as a result of a risk assessment. Before determining the use of the muting lamp, check laws and regulations of the country or region where the F3SJ-A is used and make sure of full compliance with them. For the muting lamp, use F39-A01P□-PAC, or a F39-JJ3N universal indicator cable and a commercially available external indicator.

Recommended External Indicators p.59

■ F3SJ's Indicators

•Muting input 1 indicator turns ON when an input is applied to muting input 1.
•Muting input 2 indicator turns ON when an input is applied to muting input 2.
•Muting input 1 and 2 indicators blink while muting overriding.
•Receiver's muting error indicator turns ON when a muting error occurs.

Wiring Diagrams p.28

• Where to attach the included labels

F39-CN6 key cap for muting includes internal indicator label (1).

When muting system is used, affix the label (1) in a location so that the arrows are aligned with the portion of the internal indicator display indicated by the shaded zones.

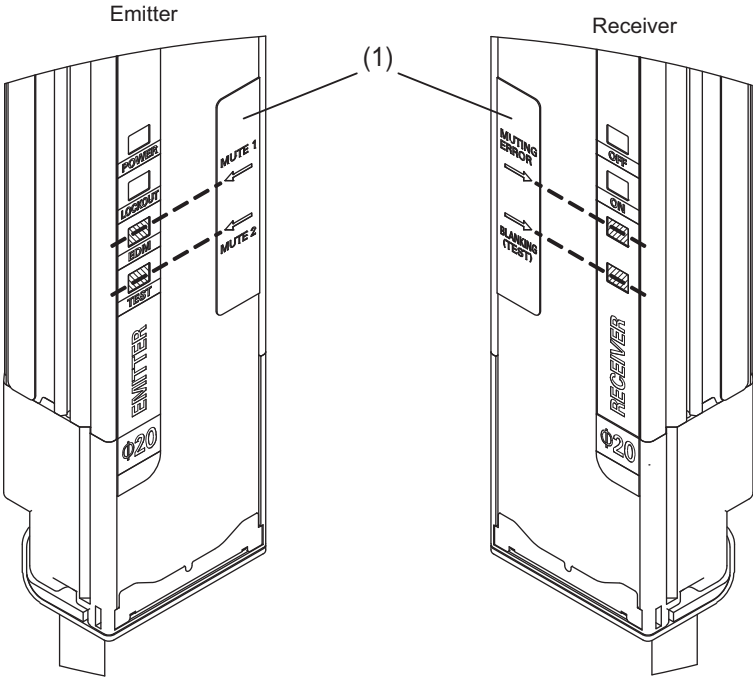

Standard Muting Mode

Turning muting inputs 1 and 2 ON with time difference enables muting function.

■ Start Conditions

If both of the following 2 conditions are present for the F3SJ, muting is activated.

1. No interrupting object is found in the F3SJ's detection zone, and safety outputs are ON.
2. After muting input 1 is turned ON (connected to 9 to 24V), muting input 2 is turned ON (connected to 9 to 24V) within the muting input time limit of T1min to T1max (0.03 to 3s).

Muting function can be enabled in up to 0.15s[*1] after the condition 2 is satisfied. If condition 1 is satisfied but the time requirement of condition 2 is not, a muting error occurs, and the receiver's muting error indicator turns ON. However, when there is a muting error, the F3SJ safety function operates and normal operation continues.

Muting error can be released by any of following conditions:

•When muting is started by the proper muting sequence (start conditions 1 and 2 are performed in order).

•Power cycle under muting input 1 and 2 OFF state.

■ End Conditions

If either of the following conditions are satisfied, the muting state is released.

•Muting input 1 or 2 turns OFF at T3 or later (0.1s or later).

•The muting continuation time exceeds the muting time limit of T2 (60s).

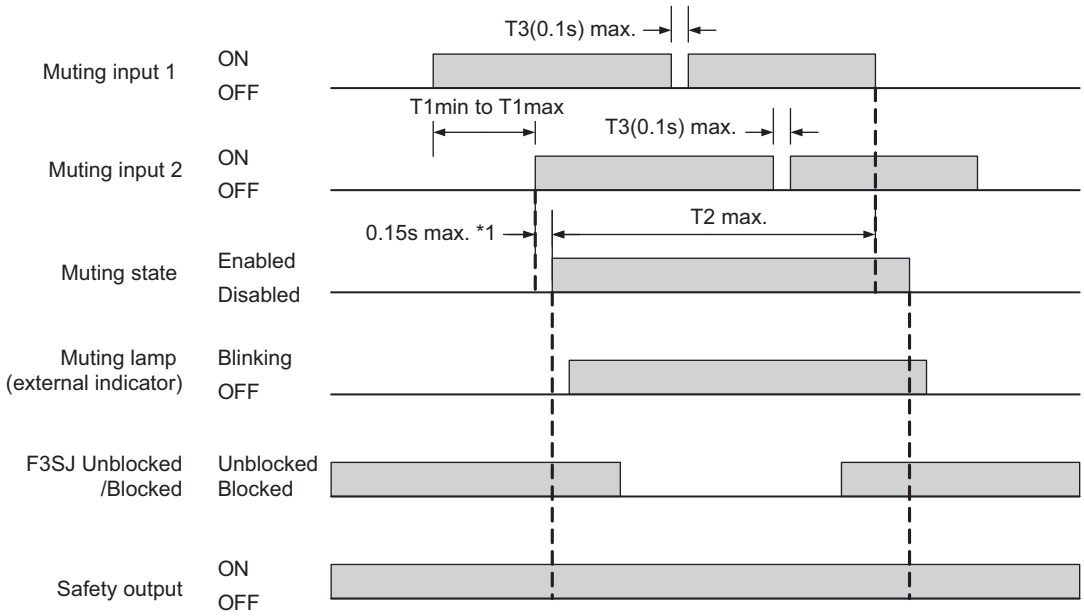

*1 The value is applied to a single sensor. Values for connected sensors are:

# of connections	*1 Value (s)
Single	0.15
2 connected	0.26
3 connected	0.29

• T1min: Muting input time limit (minimum value)
This is set to 0.03 sec., the minimum value for the input time difference between muting input 1 and 2. A muting error occurs when the input time difference between muting input 1 and 2 is less than this value.

•T1max: Muting input time limit (maximum value)
This is set to 3 sec., the maximum value for the input time difference between muting input 1 and 2.

•T2: Muting time limit
This is set to 60 sec., the muting function continuation time. When this muting state exceeds this time, muting is released.

•T3: Muting input time with allowable waveform cracks
This is the maximum value for the waveform cracks allowed for muting input 1 and 2 when muting is in effect. It is set to 0.1 sec.

CHECK!

Muting state can be released if a sensor transitions to lockout as well.

Wiring Diagrams

■ Wiring When Using Muting and External Device Monitoring Function

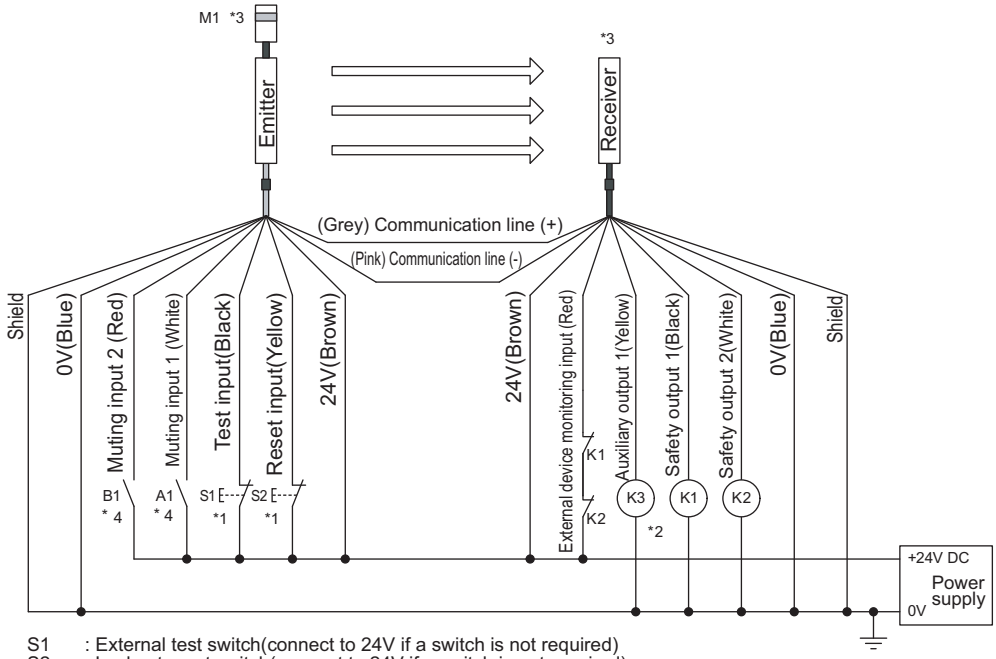

S1 : External test switch(connect to 24V if a switch is not required)
S2 : Lockout reset switch(connect to 24V if a switch is not required)
A1 : Contact by muting sensor A1
B1 : Contact by muting sensor B1
K1,K2 : Relay or other device that controls hazardous parts of the machine
K3 : Load or PLC, etc. (for monitoring)
M1 : Muting lamp

*1 Use a switch for micro loads (Input specifications: 24V, 1.0mA or less)
*2 F3SJ operates even when K3 is not connected.
*3 Connect a muting lamp to external indicator output of an emitter or a receiver.
*4 Two-wire type sensor cannot be used.

■ Wiring When External Device Monitoring Function Is Not Required

The external device monitoring function is disabled by connecting auxiliary output 1 and external device monitoring input as shown below.

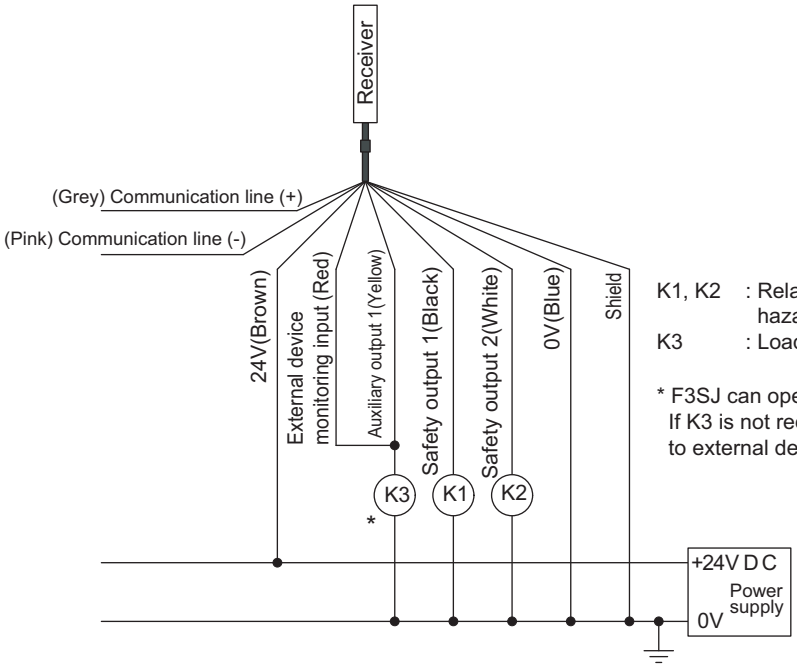

K1, K2 : Relay or other device that controls hazardous parts of the machine
K3 : Load or PLC, etc. (for monitoring)

* F3SJ can operate even if K3 is not connected. If K3 is not required, connect auxiliary output 1 to external device monitoring input only.

■ Ref.: Minimum Wiring Required to Check the Operation of the F3SJ When Using the Muting Function

(Wiring that does not use the external device monitoring function)

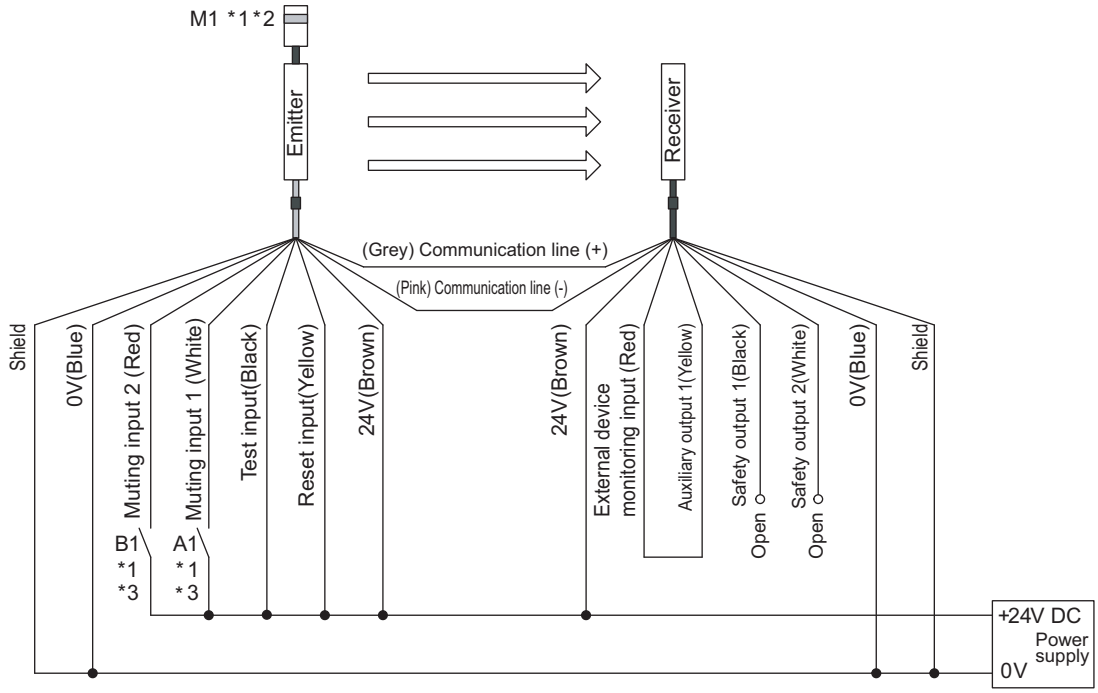

A1 : Contact by muting sensor A1
B1 : Contact by muting sensor B1
M1 : Muting lamp

*1 When the muting function's operation check is not performed, it can work if this is open.
*2 Connect either the emitter or receiver to the muting lamp.
*3 Two-wire type sensor cannot be used.

Installation Standard for Muting Sensors

- Set the muting sensors so that they can detect all of the passing detection objects (palettes, automobiles, etc.). Do not install in a position so that only the front or rear end of the detection object is detected.
- Set the muting sensors so that they detect the objects even when they are loaded on palettes or other transport devices.
- Also, install the F3SJ and muting sensors so that each object passes through all muting sensors before the next object arrives at the first muting sensor. Also, install all F3SJ and muting sensors so that no person is able to accidentally enter the hazardous zone while the muting function is enabled.

Installation Example 1 of Standard Muting Mode (using 2 muting sensors)

This is an example of 2 retro-reflective type photoelectric sensors used as muting sensors installed in a cross pattern.
Use 2 sensors when the length L of the workpieces are not constant or are insufficient.

1. Before a workpiece passes through

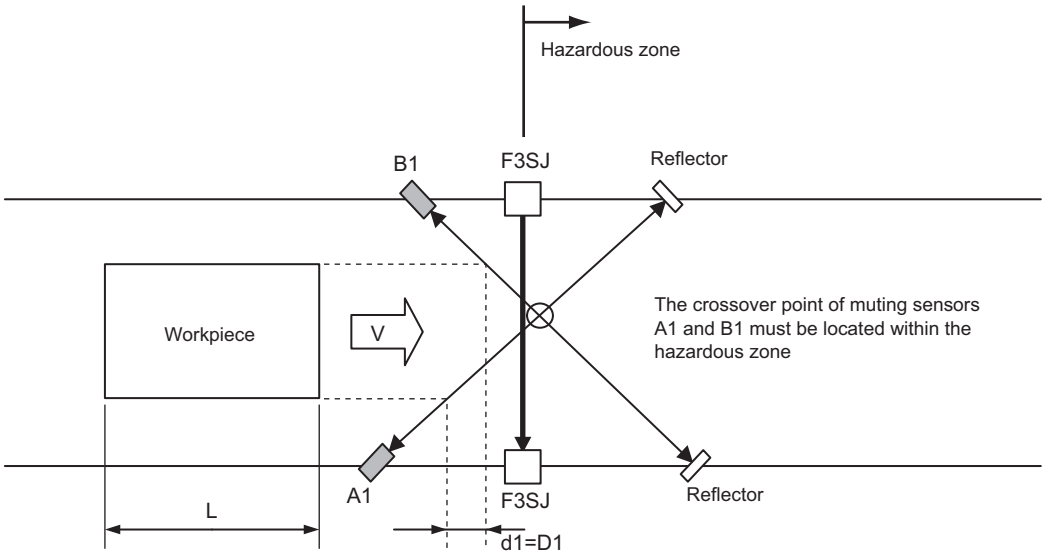

L: Length of workpiece
d1: Maximum distance required for the muting sensor to keep the muting function enabled
D1: Minimum distance required for the muting sensor to keep the muting function enabled

The output state of muting sensors A1 and B1 are both OFF (contacts A1 and B1 are open due to muting output), and the safety function of the F3SJ is working.
In this example where 2 muting sensors are used, the crossover point of muting sensors A1 and B1 must be located in the hazardous zone. This configuration prevents the muting function from being enabled by a person passing through the crossover point.

2. The muting sensor outputs are turned ON (muting inputs are HIGH) and the safety function of the F3SJ is disabled.

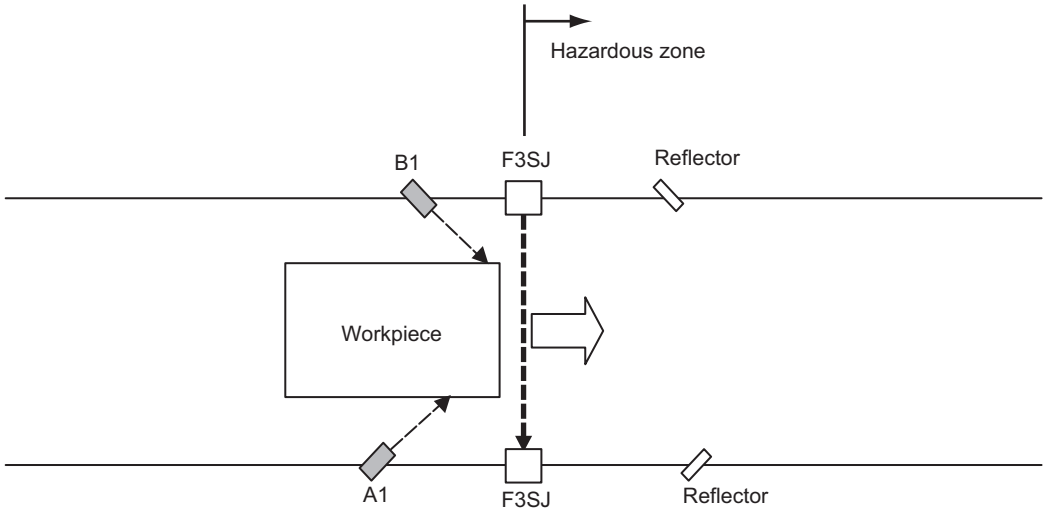

When muting sensors A1 and B1 are turned ON in this order, the muting function is enabled. In this state, the safety function of the F3SJ is disabled.

3. The muting sensor outputs are turned ON (muting inputs are HIGH) and the safety function of the F3SJ is disabled.

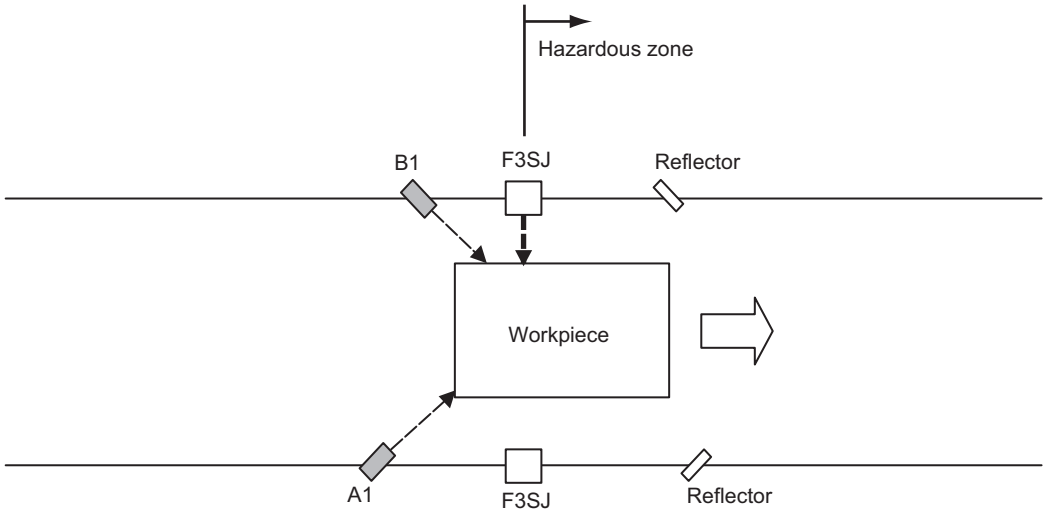

The F3SJ is blocked but the safety function is disabled by the muting function, and safety outputs 1 and 2 are turned ON.

4. The muting function is released

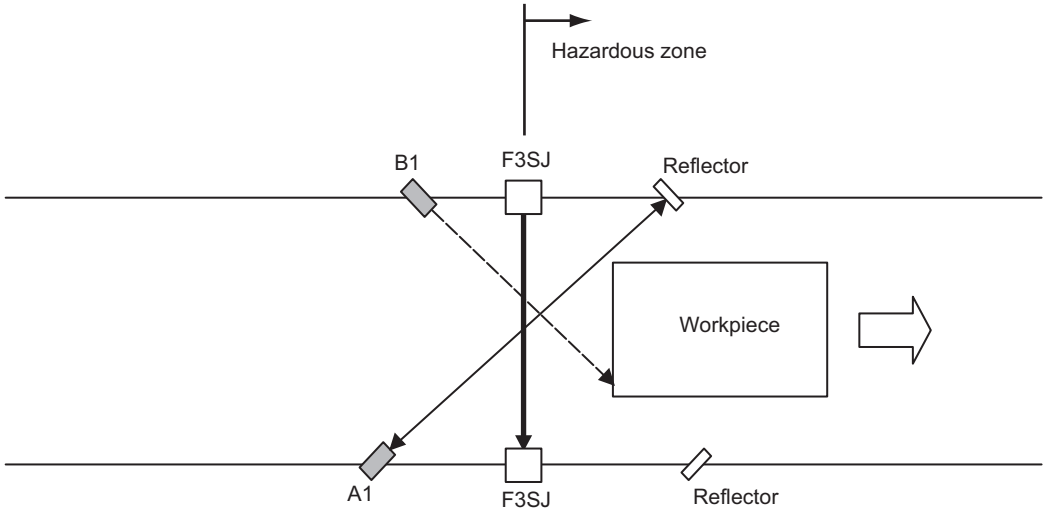

Muting sensor A1 is turned OFF, the muting function is released, and the safety function of the F3SJ is enabled.

■ Installation Distance

The minimum distance, D1 [m], required for muting sensors to keep the muting function enabled is

D1 < L . . . . . Formula (1)

L [m] : Length of a workpiece

The maximum distance, d1 [m], required for muting sensors to keep the muting function enabled is

V x T1min < d1 < V x T1max . . . . . Formula (2)

V [m/s] : Approach speed of a workpiece

T1min [s] : Muting input time limit value (minimum). 0.03s.

T1max [s] : Muting input time limit value (maximum). 3s.

To enable the muting function, D1 and d1 must satisfy formulas (1) and (2), respectively.

This distance must prevent the muting function from being enabled by a person passing through the muting sensors.

Also, install the F3SJ and muting sensors so that a workpiece passes through all muting sensors before the next workpiece arrives at the muting sensors.

■ Wiring Diagrams

Using a photoelectric switch as a muting sensor

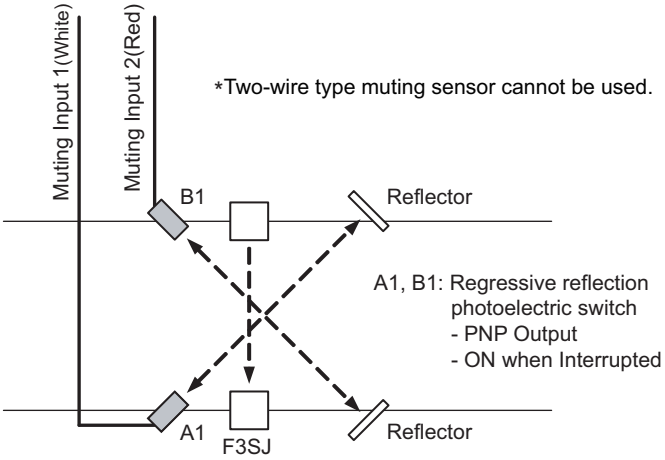

Using an N.O contact type switch as a muting sensor

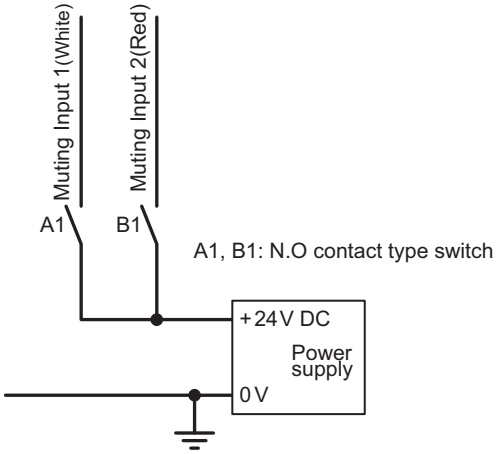

■ Timing Chart

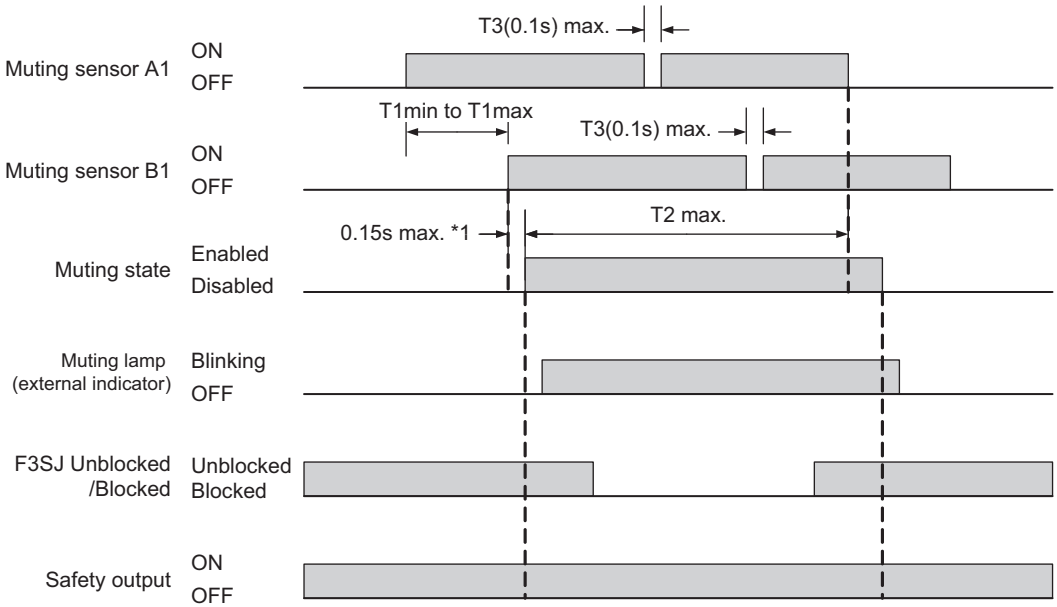

*1 The value is applied to a single sensor. Values for connected sensors are:

# of connections	*1 Value (s)
Single	0.15
2 connected	0.26
3 connected	0.29

•T1min: Muting input time limit (minimum value)
This is set to 0.03 sec., the minimum value for the input time difference between muting input 1 and 2. A muting error occurs when the input time difference between muting input 1 and 2 is less than this value.

•T1max: Muting input time limit (maximum value)
This is set to 3 sec., the maximum value for the input time difference between muting input 1 and 2.

•T2: Muting time limit
This is set to 60 sec., the muting function continuation time. When this muting state exceeds this time, muting is released.

•T3: Muting input time with allowable waveform cracks

This is the maximum value for the waveform cracks allowed for muting input 1 and 2 when muting is in effect. It is set to 0.1 sec.

Installation Example 2 of Standard Muting Mode (using 4 muting sensors)

This installation example uses 4 through-beam type photoelectric sensors as muting sensors.
The use of 4 muting sensors is useful when the length of the workpieces (L) is constant or longer.

1. Before a workpiece passes through

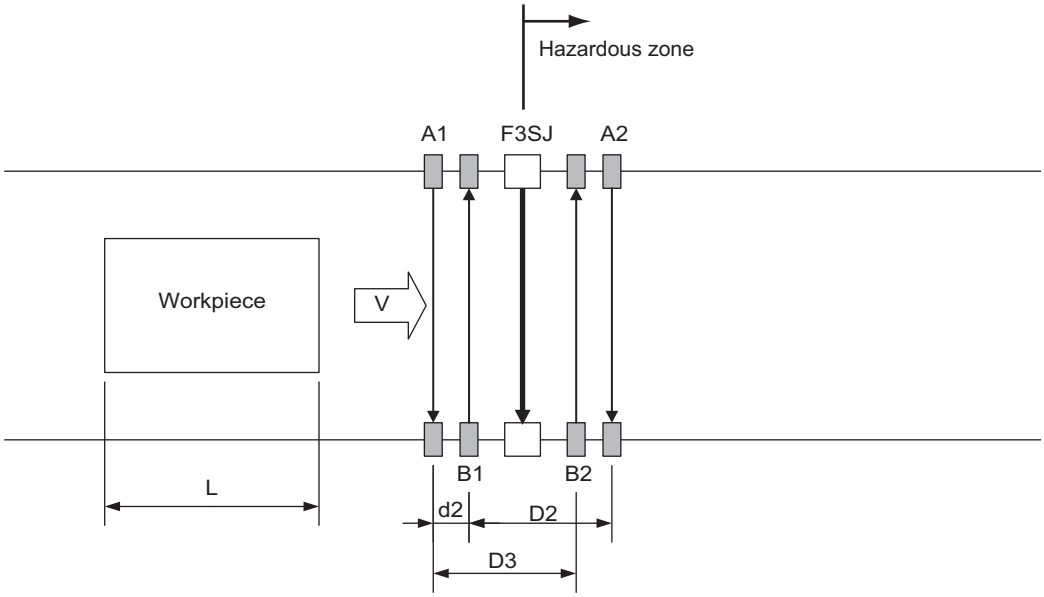

d2: Maximum distance required for the muting sensor to keep the muting function enabled
D2, D3: Minimum distances required for the muting sensor to keep the muting function enabled

All muting sensors are turned OFF and the safety function of the F3SJ is working.

2. The muting sensors are blocked and the safety function of the F3SJ is disabled

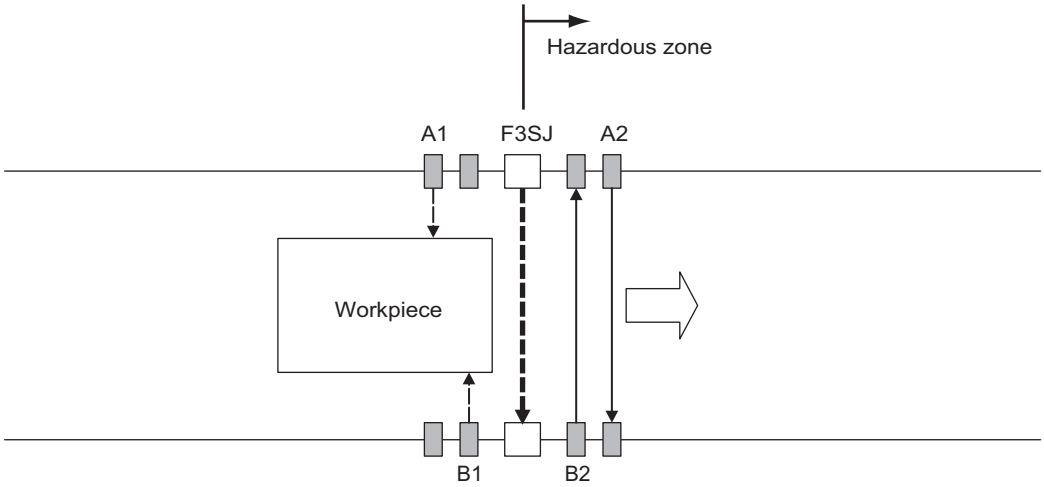

When muting sensors A1 and B1 are turned ON in this order, the muting function is enabled. In this state, the safety function of F3SJ is disabled.

3. The muting sensors are blocked and the safety function of the F3SJ is disabled

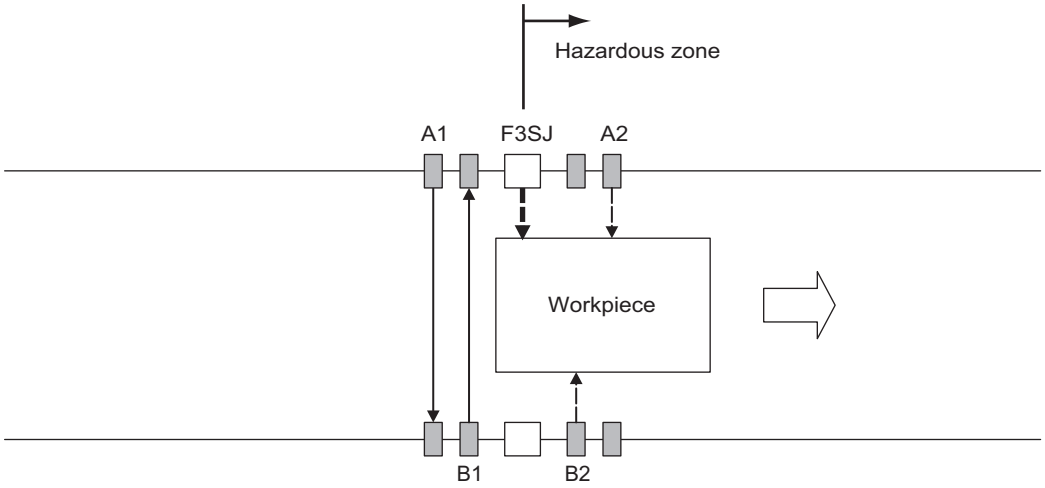

Muting sensors A1 and B1 are turned OFF but A2 and B2 are ON, so the muting function is still working. Safety outputs 1 and 2 are turned ON.

4. The muting function is released

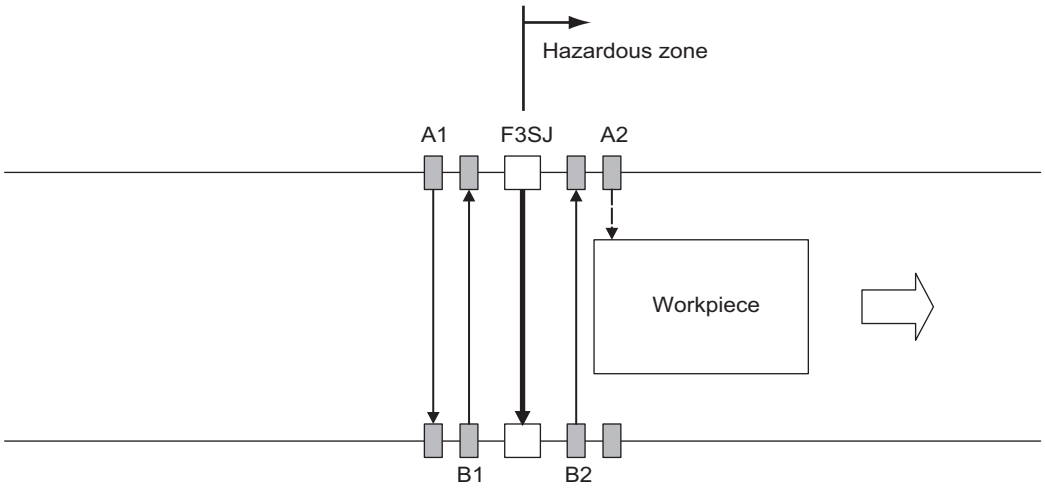

Muting sensor A2 is turned OFF and the muting function is released, and the safety function of the F3SJ is working.

■ Installation Distance

The minimum distances, D2 [m] and D3 [m], required for the muting sensors to keep the muting function enabled are

D2 < L . . . . . Formula (3)

D3 < L . . . . . Formula (4)

L [m] : Length of a workpiece

The maximum distance, d2 [m], required for muting sensors to keep the muting function enabled is

V x T1min < d2 < V x T1max . . . . . Formula (5)

V [m/s] : Approach speed of a workpiece

T1min [s] : Muting input time limit value (minimum). 0.03s.

T1max [s] : Muting input time limit value (maximum). 3s.

To enable the muting function, D2, D3, and d2 must satisfy formulas (3), (4), and (5), respectively.

This distance must prevent the muting function from being enabled by a person passing through the muting sensors. Also, install the F3SJ and muting sensors so that a workpiece passes through all muting sensors before the next workpiece arrives at the first muting sensor.

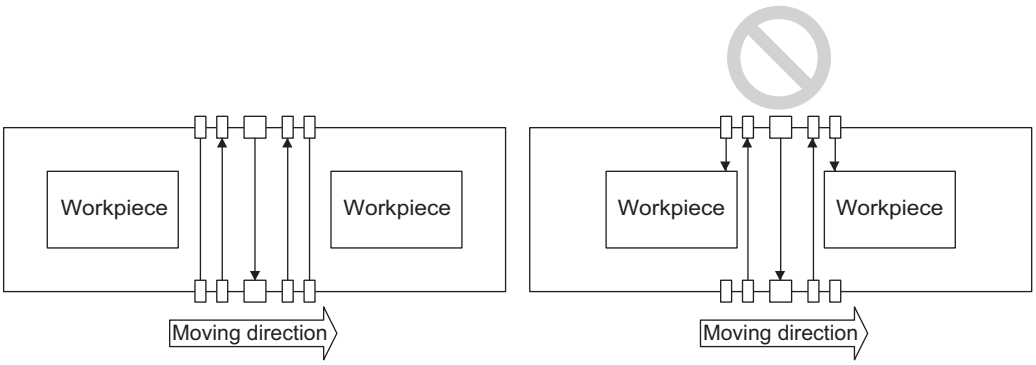

■ Wiring Diagrams

Using a photoelectric switch as a muting sensor

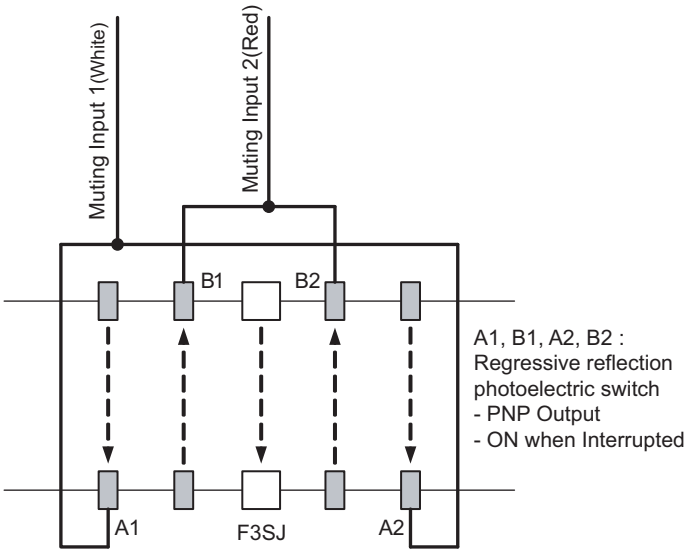

Using an N.O contact type switch as a muting sensor

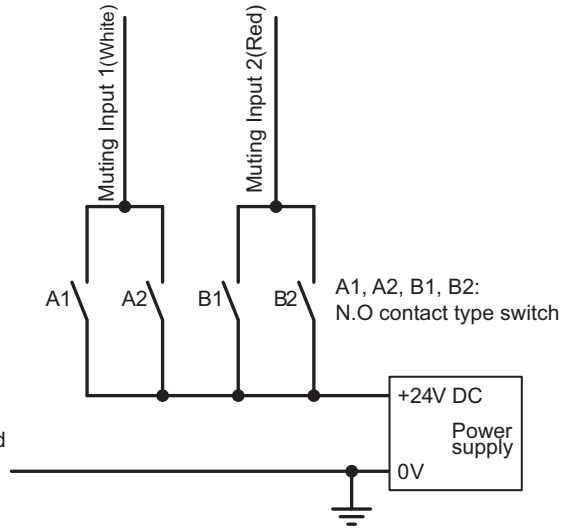

* Two-wire type muting sensor cannot be used.

■ Timing Chart

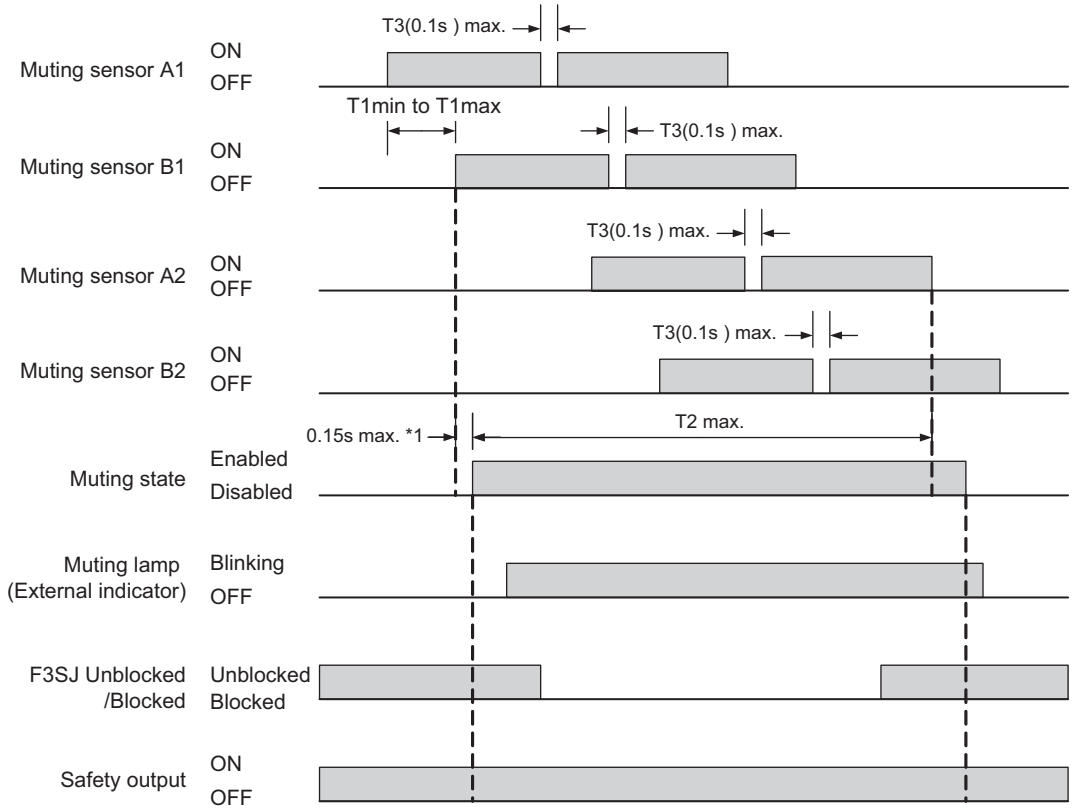

*1 The value is applied to a single sensor. Values for connected sensors are:

# of connections	*1 Value (s)
Single	0.15
2 connected	0.26
3 connected	0.29

•T1min: Muting input time limit (minimum value)
This is set to 0.03 sec., the minimum value for the input time difference between muting input 1 and 2. A muting error occurs when the input time difference between muting input 1 and 2 is less than this value.

•T1max: Muting input time limit (maximum value)
This is set to 3 sec., the maximum value for the input time difference between muting input 1 and 2.

•T2: Muting time limit
This is set to 60 sec., the muting function continuation time. When this muting state exceeds this time, muting is released.

•T3: Muting input time with allowable waveform cracks
This is the maximum value for the waveform cracks allowed for muting input 1 and 2 when muting is in effect. It is set to 0.1 sec.

■ Reference: Bidirectional Muting

Shown below is an example of bidirectional muting with 4 retro-reflective photoelectric sensors.
It can be used for applications of workpiece approaching from both directions.
Connect outer muting sensors A1 and A2 to the muting input 1 and inner muting sensors B1 and B2 to the muting input 2.

1. Workpiece approaching from the left

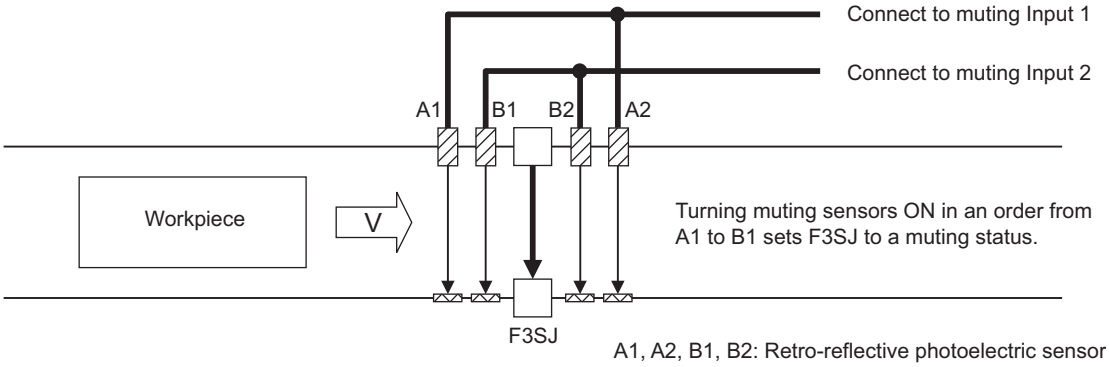

2. Muting from an opposite direction is available as well

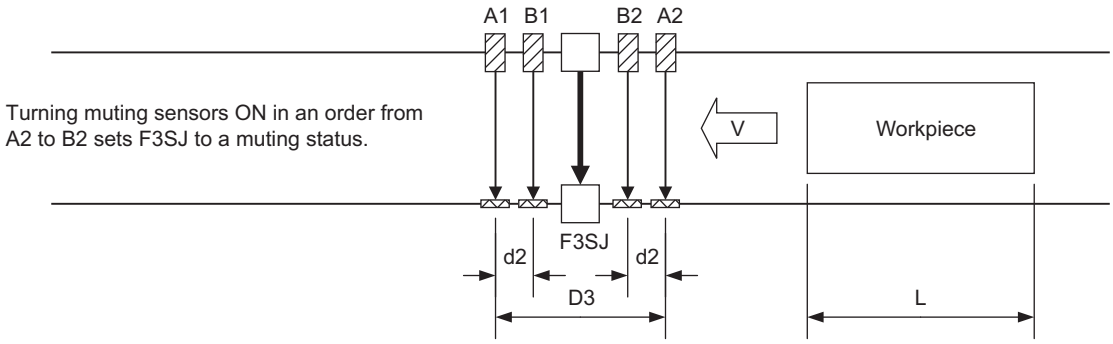

This arrangement example uses regressive reflection type E3Z-R□□ series as a muting sensor. Arrangement must take mutual interference into account.
Muting sensors must be installed so that a distance D3 between muting sensors A1 and A2 should be smaller than workpiece length L.
As a muting sensor, a transmission or regressive reflection type photoelectric switch, proximity switch(3-wire type), or limit switch can be used. Two-wire type muting sensor cannot be used.

Distances d2 & D2 between muting sensors: p.35

■ Reference: Preventing light interference of muting sensor

When a photoelectric sensor is used as a muting sensor, light interference may cause a muting error of F3SJ. Light interference may occur due to:

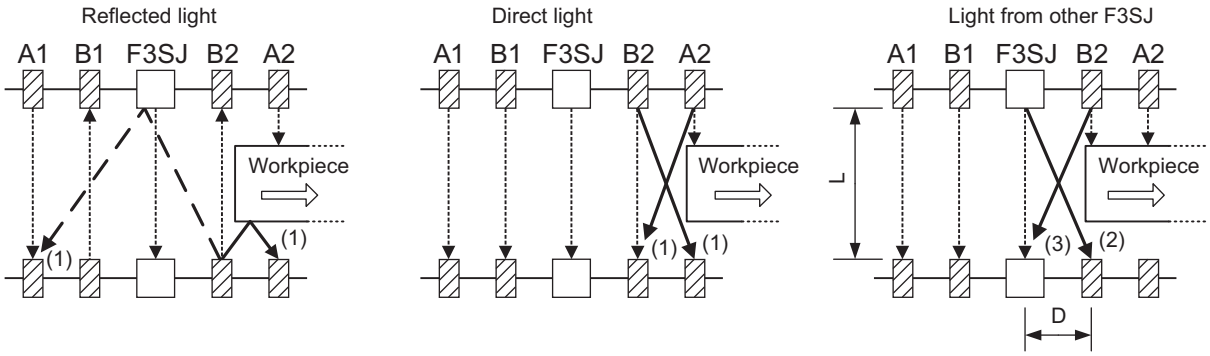

(1) Interference between muting sensors
- Use sensors with mutual interference prevention (such as retro-reflective E3Z-R□□ series)
- Use laser-type sensors (such as laser-type E3Z-LR□ series)
- Take distance from a sensor causing the interference
- Displace beams for each other to prevent interference (change installation height or place them crosswise)
- Install a barrier
- Attach interference prevention filter (provided for E3Z series as accessories)
- Attach a slit to reduce light intensity (provided for E3Z series as accessories)
- Lower the sensitivity
- Reduce a distance between a workpiece and a muting sensor to prevent reflected light from a workpiece

(2) Interference to a muting sensor from F3SJ
- Configure an operating range of F3SJ by the setting tool
- Take distance (D) from a sensor causing the interference
- Displace beams for each other to prevent interference (change installation height or place them crosswise)
- Install a barrier
- Arrange sensors in alternation
- Lower the sensitivity

(3) Interference from a muting sensor to F3SJ
- Use a red LED type sensor (such as retro-reflective E3Z-R□□ series)
- Use laser-type sensors (such as laser-type E3Z-LR□ series)
- Take distance (D) from a sensor causing the interference
- Displace beams for each other to prevent interference (change installation height or place them crosswise)
- Install a barrier
- Arrange sensors in alternation
- Attach a slit to reduce light intensity (provided for E3Z series as accessories)

Mutual interference between a muting sensor and F3SJ in (2) and (3) above can be prevented by configuring D satisfying a formula shown below:

- If L = 0.2 to 3m D = 0.26m or larger
- If L = 3m or larger D = L x tan5° = L x 0.088m or larger

L : Distance between an emitter and a receiver of F3SJ
D : Distance between a muting sensor and F3SJ

Override Function (Dynamic Input)

The override function forcibly turns the safety outputs ON when the muting start condition is not satisfied. If a workpiece stops while passing through the detection zone of the F3SJ, as shown below, causing a muting error, the normal state cannot be recovered unless the workpiece is removed from the muting sensors and the detection zone of the F3SJ. However, the override function will mute the safety outputs of the F3SJ so that the conveyor can be restarted to move the workpiece out of the muting sensors and F3SJ detection zone.

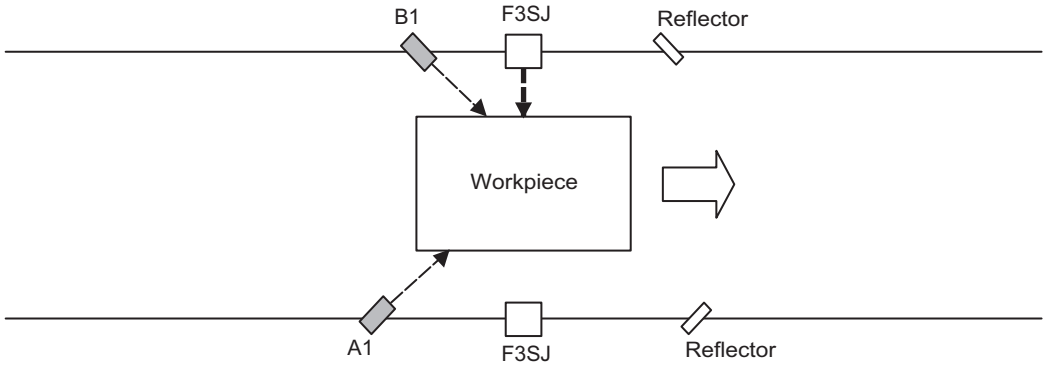

The override function can be enabled for up to 60s.
The muting lamp (external indicator) blinks while overriding.

⚠ WARNING

The muting and override functions disable the safety functions of the device. You must ensure safety using other method when these functions are operating.

Muting lamps (external indicators) that indicate the state of the muting and override functions must be installed where they are clearly visible to workers from all the operating positions.

Install the switch that uses hold-to-run device such as a spring-return key switch and is installed in a location that provides a clear view of the entire hazardous zone and where it cannot be activated from within the hazardous zone. Make sure that nobody is in the hazardous zone before activating the override function.

■ Override Start Conditions

If all of the following conditions are present in the F3SJ, the override function starts. The override function can be put into effect even when there is a muting error.

1. If either muting input 1 or 2 is ON (1 or more muting sensors are turned ON by a workpiece)
2. The F3SJ is blocked and the output is OFF
3. Under the conditions of 1 and 2 shown above, the reset input changes from ON to OFF (for 0.04s or longer), from OFF to ON (for 0.04s or longer), then from ON to OFF (within 3s as a whole).

The override function is activated in 3s after the reset input is turned OFF.
If the reset input is turned ON within 3s after completion of input by Step 3 described above, the series of the operations are cancelled and an input by Step 3 can be accepted again.
If an input failed, perform an input by Step 3 again.

■ Override End Conditions

When either of the following conditions is satisfied, the function is released.

•When 60 seconds has elapsed under the override state

•All muting sensors are turned OFF

•When the reset input turns from OFF to ON

CHECK! Override state can be released if a sensor transitions to lockout as well.

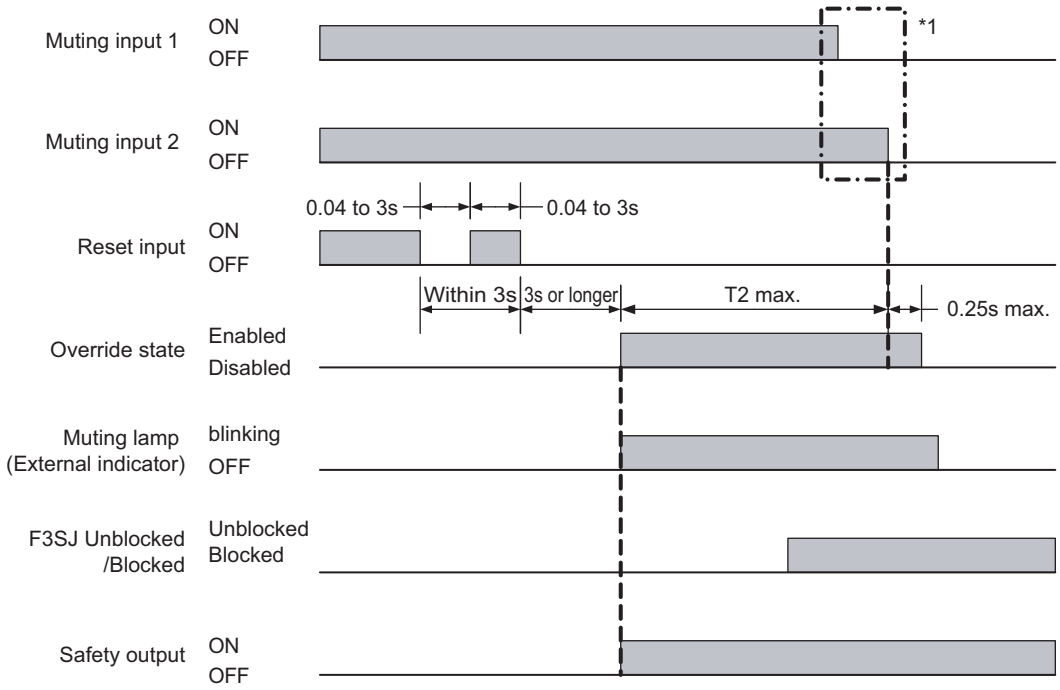

*1 There are 3 override end conditions. For details, see override end conditions.

- T2: Override Time Limit
Continuance time of overriding. If override state exceeds this time, the function is canceled.

■ Operation of the F3SJ's Internal Indicators When Override Function Is Performed

•Muting input 1 indicator turns ON when an input is applied to muting input 1.

•Muting input 2 indicator turns ON when an input is applied to muting input 2.

•Muting input 1 and 2 indicators blink while muting overriding

•Muting error indicator turns ON when a muting error occurs.

External Test Function

This function forcibly stops the emission using an external signal. It can be used to verify that the safety system should stop properly when the F3SJ is interrupted.
To stop the emission, open the test input line of the emitter or apply 0-1.5V. The voltage must be applied for a period 0.3s plus 4 times of Toff or longer.

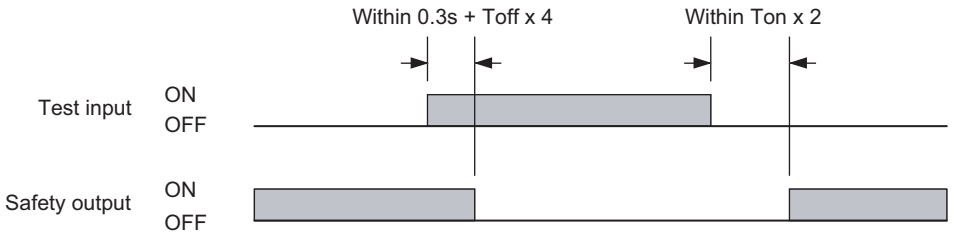

Ton: Response time of safety output's OFF to ON, Toff: Response time of safety output's ON to OFF

Response time p.12

CHECK!
Test input logic can be reversed by attaching a test input logic switching cap F39-CN7(case color : gray) to an emitter. (Emission is stopped by 24V short circuit)
This function is available for F3SJ-A□□□□P□□-01TS and F3SJ-A□□□□N□□-01T only.

■ Operation of the F3SJ's Internal Indicators When External Test Function Is Performed

Test indicator blinks when voltage is applied to the test input.

Self-Test Function

The F3SJ performs the self-test when power is turned ON (within 2 second, or 2.2 seconds in case of series connection) to check for errors. Also, it regularly performs the self-test (within a response time) while operating.
The timing chart is the same as the one for the basic system. For details, see the following the page.

p.20

Auxiliary Output (Non-Safety Output)

The auxiliary output is used to monitor the status of the F3SJ. This output can be connected to a device such as a relay, indication lamp, programmable controller, etc.

⚠ WARNING

Do not use the auxiliary output or external indicator output for safety applications. Human body may not be detected when F3SJ fails, resulting in serious injury.

Auxiliary output 1 provides an inverted signal of the safety output.

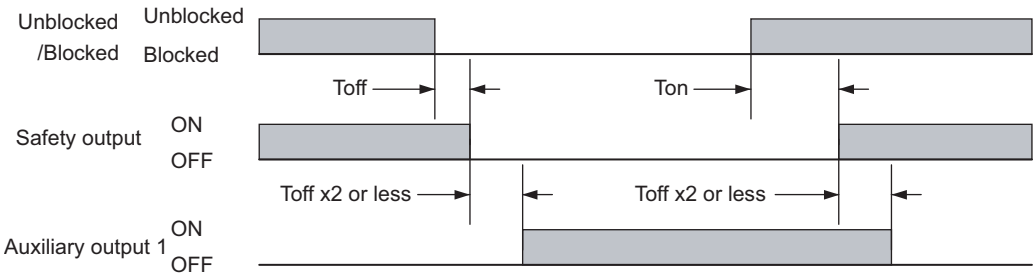

Ton: Response time of safety output's OFF to ON, Toff: Response time of safety output's ON to OFF

Response time p.12

Resetting Lockout

When the cause of the lockout is removed, the lockout condition can be released by using either of the following methods.

•Cycle the power back ON

•Set the reset input line open or to 0 to 1.5V for 100ms or longer, and then apply 9 to 24V again.

CHECK!

Lockout due to a communication error, muting wiring error and an ABC blinking error may not be released by a reset input.

External Device Monitoring Function (EDM)

This function detects malfunctions, such as welding, in external relays (or contactors) that control the hazardous zone of a machine.

The timing chart is the same as that for the basic system. For details, refer to the page shown below.

External Device Monitoring Function p.23

For the wiring diagram, refer to the page shown below.

Wiring Diagrams p.28

■ Operation of the F3SJ's Internal Indicator When Using the External Device Monitoring Function

The internal indicator cannot be used to check the input to the external device monitoring input.

Chapter3 Wiring/Installation

Installation Conditions 46

- Detection Zone and Approach 46
- Safety Distance 47
- Distance from Reflective Surfaces 51
- Mutual Interference Prevention 52

Series Connection 55

- Connection Procedure 57

Attaching External Indicators 59

- Connection Procedure 59
- Output Operation 60

Dimensions 61

- When Using Standard Mounting Brackets 61
- When Using Optional Mounting Brackets 64
- When Using Spatter Protection Covers 77
- Mounting a Protect Bar 78
- Mounting an Environment-Resistant Case 80

Mounting 82

- Top/Bottom Mounting Brackets 82
- Intermediate Mounting Brackets 82
- Mounting Procedure 83
- Adjustment Procedure 86

Wiring 87

- Wiring Precautions 87
- Power Supply Unit 88
- Wiring Procedure 89

Installation Conditions

Detection Zone and Approach

⚠ WARNING

Install a protective structure so that the hazardous part of a machine can only be reached by passing through the sensor's detection zone. Install the sensors so that part of the person is always present in the detection zone when working in a machine's hazardous zones.
If a person is able to step into the hazardous zone of a machine and remain behind the F3SJ's detection zone, configure the system with an interlock function that prevents the machine from being restarted. Failure to do so may result in serious injury.

Do not use this sensor for machines that cannot be stopped by electrical control. For example, do not use it for a pressing machine that uses a full-rotation clutch. Otherwise, the machine may not stop before a person reaches the hazardous part, resulting in serious injury.

To use the F3SJ in PSDI mode (Reinitiation of cyclic operation by the protective equipment), you must configure an appropriate circuit between the F3SJ and the machine. For details about PSDI, refer to OSHA1910.217, IEC61496-1, and other relevant standards and regulations.

Install the interlock reset switch in a location that provides a clear view of the entire hazardous zone and where it cannot be activated from within the hazardous zone.

Do not use the F3SJ in environments where flammable or explosive gases are present. Doing so may cause an explosion.

The F3SJ cannot protect a person from an object flying from a hazardous zone. Install protective cover(s) or fence(s).

Make sure that the F3SJ is securely mounted and its cables and connectors are properly connected.

Correct installation

The hazardous zone of a machine can be reached only by passing through the sensor's detection zone.

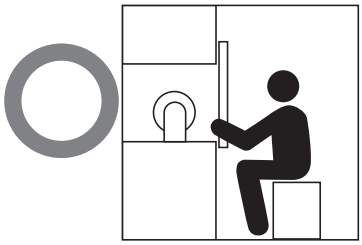

While working, a person is inside the sensor's detection zone.

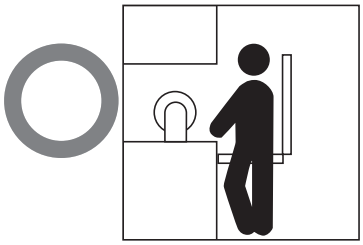

Incorrect installation

It is possible to reach the hazardous zone of a machine without passing through the sensor's detection zone.

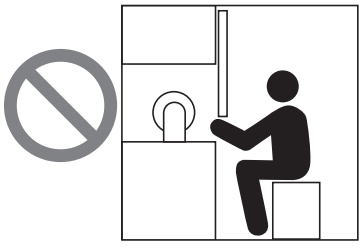

A person is between the sensor's detection zone and the hazardous zone of a machine.

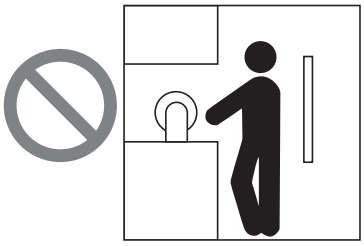

Safety Distance

The safety distance is the distance that must be set between the F3SJ and a machine's hazardous part to stop the hazardous part before a person or object reaches it. The safety distance varies according to the standards of each country and the individual specifications of each machine. Always refer to the relevant standards.

⚠ WARNING

Make sure to secure the safety distance (S) between the F3SJ and the hazardous part. Otherwise, the machine may not stop before a person reaches the hazardous part, resulting in serious injury.

CHECK! The response time of a machine is the time period from when the machine receives a stop signal to when the machine's hazardous part stops. Measure the response time on the actual system. Also, periodically check that the response time of the machine has not changed.

■ How to calculate the safety distance specified by International Standard ISO 13855 (European standard EN ISO 13855)(Reference)

<u>If a person approaches the detection zone of the F3SJ perpendicularly</u>

S = K x T + C . . . Formula (1)

- S: Safety distance
- K: Approach speed to the detection zone
- T: Total response time of the machine and F3SJ
- C: Additional distance calculated by the detection capability of the F3SJ

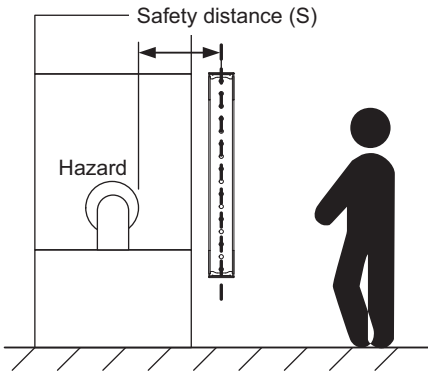

<System that has detection capability of 40mm or less>

Use K = 2,000mm/s and C = 8 x (d - 14mm) in formula (1) for the calculation.

S = 2,000mm/s x (Tm + Ts) + 8 x (d - 14mm)

•S = Safety distance (mm)

•Tm = Machine's response time (s)

•Ts = Response time of the F3SJ from ON to OFF (s)

•d = Detection capability of the F3SJ (mm)

[Calculation example]

When Tm = 0.05s, Ts = 0.01s, and d = 20mm:

S=2,000mm/s x (0.05s + 0.01s) + 8 x (20mm - 14mm)

= 168mm . . . Formula (2)

If the result < 100mm, use S = 100mm.

If the result exceeds 500mm, use the following expression where K = 1,600mm/s.

S=1,600mm/s x (Tm + Ts) + 8 x (d - 14mm) . . . Formula (3)

If the result of this formula (3) < 500mm, use S = 500mm.

<u>Possible circumventing by reaching over the detection zone</u>

If access to the hazardous zone by reaching over the detection zone of vertically mounted F3SJ cannot be excluded, the height and the safety distance, S, of the F3SJ shall be determined. S shall be

determined by comparison of the calculated values in If a person approaches the detection zone of the F3SJ perpendicularly. The greater value resulting from this comparison shall be applied.

S=(K × T) + Cro . . . Formula (5)

•S: Safety distance

•K: Approach speed to the detection zone

•T: Total response time of the machine and F3SJ

•Cro: Approach distance based on the distance which personnel can move towards the hazardous zone of a machine by reaching over the detection zone. The distance is determined in the table below based on the height of the hazardous zone, a, and the height of the upper edge of the detection zone, b.

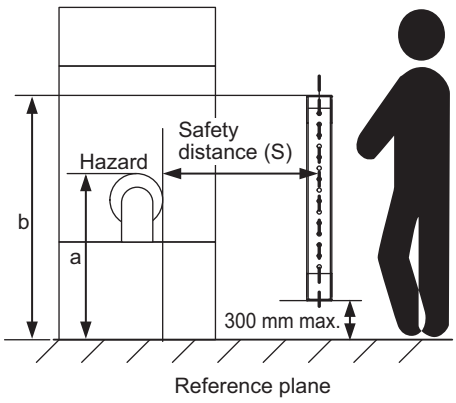

Note:Lower edge of the detection zone above 300 mm in relation to the reference plane does not offer sufficient protection against crawling below.

First, use K = 2,000 mm/s in formula (5) for the calculation. If the result of this calculation is less than 100 mm, use S = 100 mm.

If the result exceeds 500 mm, use K = 1,600 mm/s to recalculate it. If the result of the recalculation is less than 500 mm, use S = 500 mm.

Height of hazardous zone, a	Height of upper edge of detection zone, b											
	900	1000	1100	1200	1300	1400	1600	1800	2000	2200	2400	2600
	Additional distance to hazardous zone, Cro											
2600	0	0	0	0	0	0	0	0	0	0	0	0
2500	400	400	350	300	300	300	300	300	250	150	100	0
2400	550	550	550	500	450	450	400	400	300	250	100	0
2200	800	750	750	700	650	650	600	550	400	250	0	0
2000	950	950	850	850	800	750	700	550	400	0	0	0
1800	1100	1100	950	950	850	800	750	550	0	0	0	0
1600	1150	1150	1100	1000	900	850	750	450	0	0	0	0
1400	1200	1200	1100	1000	900	850	650	0	0	0	0	0
1200	1200	1200	1100	1000	850	800	0	0	0	0	0	0
1000	1200	1150	1050	950	750	700	0	0	0	0	0	0
800	1150	1050	950	800	500	450	0	0	0	0	0	0
600	1050	950	750	550	0	0	0	0	0	0	0	0
400	900	700	0	0	0	0	0	0	0	0	0	0
200	600	0	0	0	0	0	0	0	0	0	0	0
0	0	0	0	0	0	0	0	0	0	0	0	0

Note 1.Upper edge of the detection zone below 900 mm is not included since they do not offer sufficient protection against circumventing or stepping over.

Note 2.When determining the values of this table, it shall not be interpolated. If the known values a, b or Cro are between two values of this table, the greater safety distance shall be used.

[Calculation example]

- T: Tm + Ts (s)
- Tm: Machine's response time (s)

- Ts: Response time of the F3SJ from ON to OFF (s)
- a: Height of machine hazardous zone (mm)
- b: Height of upper edge of detection zone (mm)

When Tm = 0.05 s, Ts = 0.01 s, a = 1,400 mm, b = 1,500 m:
From the table above, Cro = 850 mm. Since b is between 1,400 mm and 1,600 mm, b = 1,400 mm which has the greater Cro value, shall be used.
S = 2,000 mm/s × (0.05 s + 0.01 s) + 850 mm
= 970 mm
Since 970 mm is greater than 500 mm, use K = 1,600 mm/s and recalculate it.
S = 1,600 m/s × (0.05 s + 0.01 s) + 850 mm
= 946 mm

Compare S = 946 mm with the calculation in "If a person approaches the detection zone of the F3SJ perpendicularly", and choose the larger value as the safety distance.
For the system with a detection capability of 40 mm max., the safety distance S is 946 mm since this is larger than S = 120 mm calculated in the calculation example of "If a person approaches the detection zone of the F3SJ perpendicularly".
For the system with a detection capability larger than 40 mm, the safety distance S is 946 mm since this is the same value as S = 946 mm calculated in the calculation example of "If a person approaches the detection zone of the F3SJ perpendicularly".

<u>In case of horizontal approach of a human body to F3SJ's detection zone</u>

Use K = 1,600mm/s and C = (1200 - 0.4 x H) in formula (1) for calculation.Note that C must not be less than 850mm.
S = 1,600mm/s x (Tm + Ts) + 1200 - 0.4 x H
•S = Safety distance (mm)
•Tm = Machine's response time (s)
•Ts = Response time of F3SJ from ON to OFF (s)
•H = Installation height (mm)
Note that H must satisfy:
1000 >= H >= 15 (d - 50mm) >= 0mm

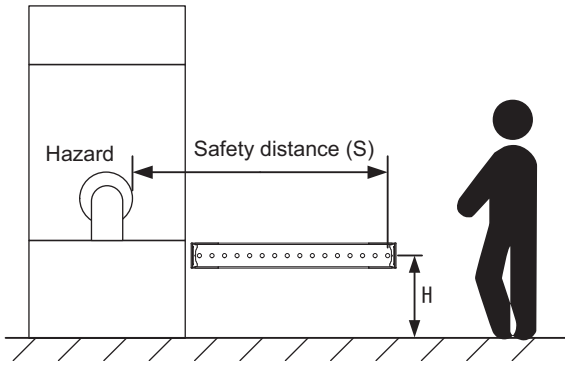

Also, you must include a hazardous condition under which a person may go through under a detection zone carelessly if it exceeds 300mm (200mm for other purpose than industrial use) into risk assessment.

[Calculation example]
When Tm = 0.05s, Ts = 0.01s, and d = 20mm:
S = 1,600mm/s x (0.05s + 0.01s) + 1200 - 0.4 x 500mm
= 1096mm

■ How to calculate the safety distance specified by American standard ANSI B11.19 (reference)

If a person approaches the detection zone of the F3SJ perpendicularly, calculate the safety distance as shown below.

S = K x (Ts + Tc + Tr + Tbm) + Dpf

•S: Safety distance

•K: Approach speed to the detection zone (the value recommended by OSHA standard is 1,600mm/s)

Approach speed K is not specified in the ANSI B.11.19 standard. To determine the value of K to apply, consider all factors, including the operator's physical ability.

•Ts = Machine's stopping time (s)

•Tr = Response time of the F3SJ from ON to OFF (s)

•Tc = Machine control circuit's maximum response time required to activate its brake (s)

•Tbm = Additional time (s)

If a machine has a brake monitor, "Tbm= Brake monitor setting time - (Ts + Tc)". If it has no brake monitor, we recommend using 20% or more of (Ts + Tc) as additional time.

•Dpf = Additional distance

According to ANSI's formula, Dpf is calculated as shown below:

Dpf = 3.4 x (d - 7.0): Where d is the detection capability of the F3SJ (unit: mm)

[Calculation example]

When K = 1,600mm/s, Ts + Tc = 0.06s, brake monitor setting time = 0.1s,

Tr = 0.01s, and d = 20mm:

Tbm = 0.1 - 0.06 = 0.04s

Dpf = 3.4 x (20 - 7.0) = 44.2mm

S = 1,600 x (0.06 + 0.01 + 0.04) + 44.2 = 220.2mm

Distance from Reflective Surfaces

⚠ WARNING

Install the sensor system so that it is not affected by reflective surfaces. Failure to do so may hinder detection, resulting in serious injury.

Install the sensor system at distance D or further from highly reflective surfaces such as metallic walls, floors, ceilings, or workpieces, as shown below.

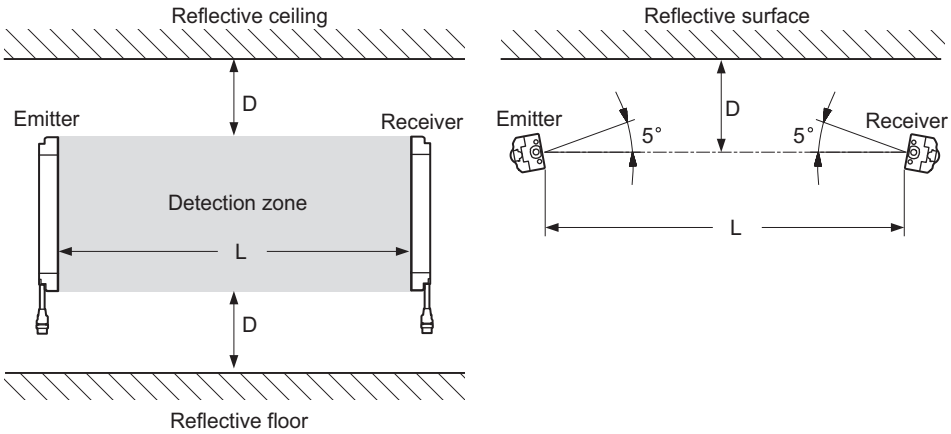

Distance between an emitter and a receiver (operating range L)	Allowable installation distance D
For 0.2 to 3m	0.13m
For 3m or more	L/2 x tan5 ° = L x 0.044 (m)

Mutual Interference Prevention

⚠ WARNING

Do not use the sensor system with mirrors in a retro-reflective configuration. Doing so may hinder detection. It is possible to use mirrors to "bend" the detection zone to a 90-degree angle.

When using more than 1 set of F3SJ, install them so that mutual interference does not occur, such as by configuring series connections or using physical barriers between adjacent sets.

■ Series Connection

Series connection can prevent mutual interference when multiple sensors are used. Up to 3 sets, 240 beams, can be connected. The emission of series-connected F3SJ is time-divided, so mutual interference does not occur and safety is ensured.

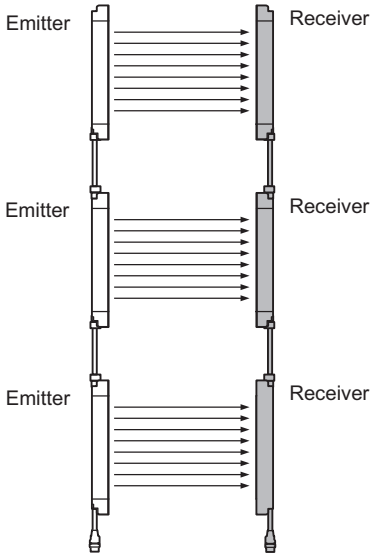

How to perform series connection p.55

■ No Connection

Mutual interference is prevented in up to 3 sets, using interference light avoidance algorithm. If 4 or more sets of F3SJ are installed and are not connected to each other, arrange them so that mutual interference does not occur. If 2 sets are installed near each other, reflection from the surface of the F3SJ may cause mutual interference. When mutual interference occurs, the safety outputs are turned OFF in a moment or the F3SJ enters lockout.

Combining countermeasures 1 to 4 shown below is effective.

Install a physical barrier between 2 sets

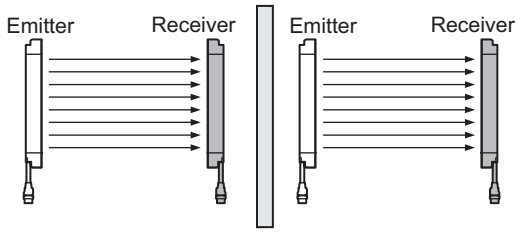

1. Alternate the direction of emission between 2 sets (alternation)

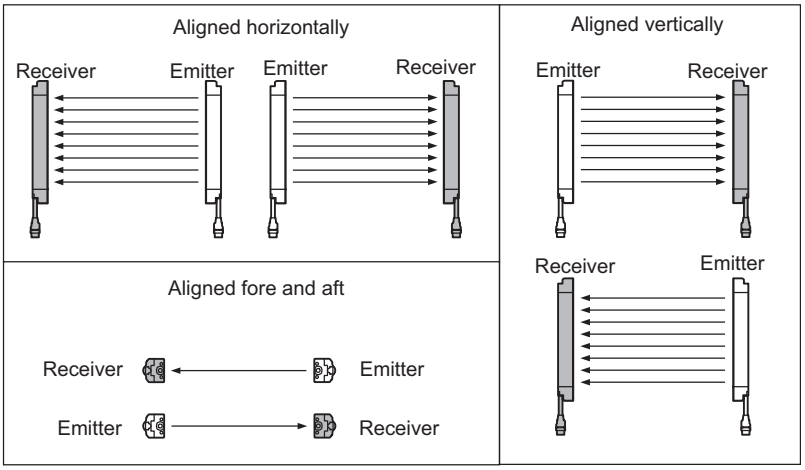

If 2 sets are installed near each other, reflection from the surfaces may cause mutual interference.

2. Keep sufficient distance between the F3SJs so that mutual interference does not occur

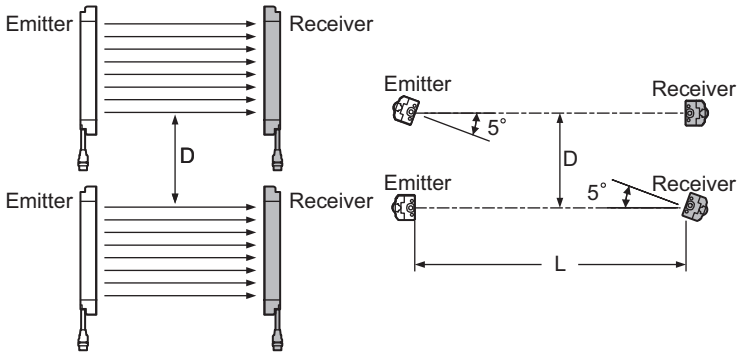

Distance between emitter and receiver (operating range L)	Allowable installation distance D
For 0.2 to 3m	0.26m
For 3m or more	L x tan5 ° = L x 0.088 (m)

When using 4 or more sets that are not series-connected, the installations shown below may cause mutual interference. When mutual interference occurs, the safety outputs are turned OFF in a moment or the F3SJ enters lockout.

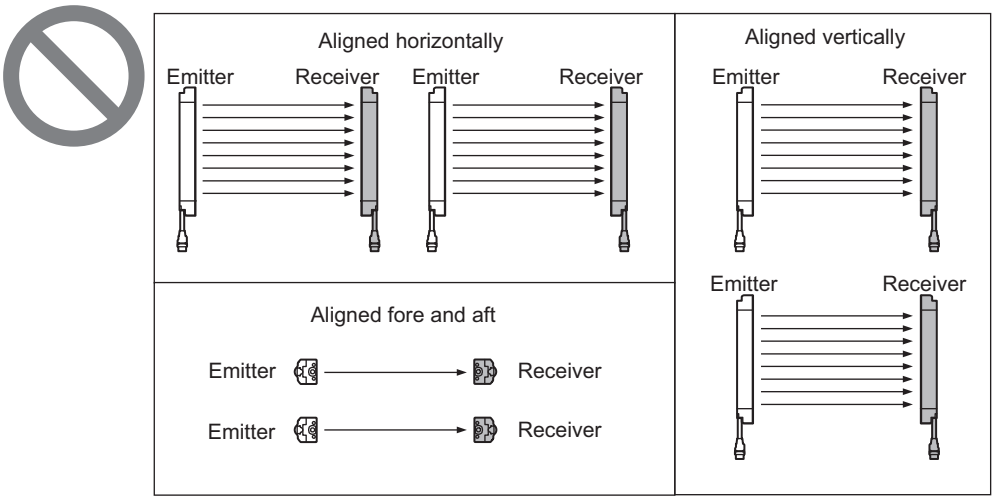

Series Connection

From 2 to 3 sets of F3SJ can be series-connected. Series connection allows them to be used as a a safety light curtain, requiring only 1 set to be wired to a controller and preventing mutual interference.
If any 1 set of series-connected F3SJ is blocked, both of the safety outputs turn OFF. The indication LED for each F3SJ turns ON separately.

- Number of connections: Up to 3 sets
- Total number of beams: Up to 240 beams
- Connection cable length between 2 F3SJ in series connection: 15m max.

Ex.: Configuring an L- or U-shaped detection zone

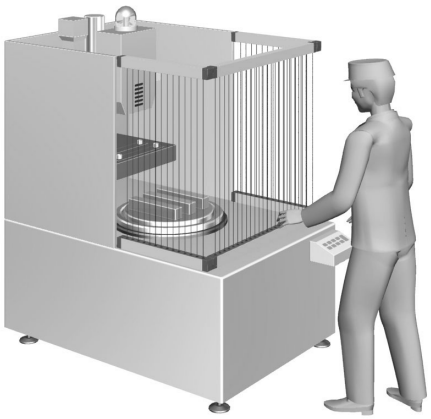

The terms used in this document to describe each F3SJ in a series connection are shown below.

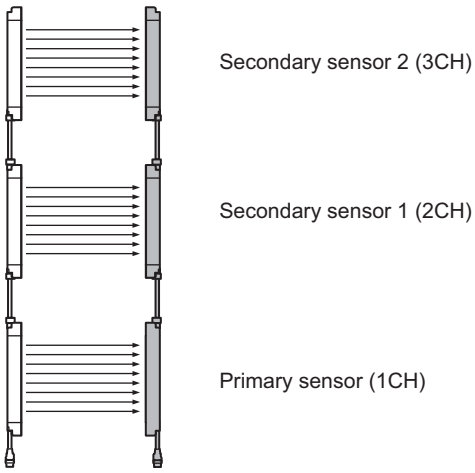

CHECK!

- When attaching a cable or cap, tightly fasten the screws (M2, in 4 places, recommended torque: 0.15N•m). Failure to do so may cause the cable/cap to come loose, leading to deterioration of the protective functions.
- F3SJ transitions to the lockout state if other sensor than F3SJ-A□□□□P□□-01TS type is connected.

Connect an emitter to another emitter, and a receiver to another receiver, as shown below.

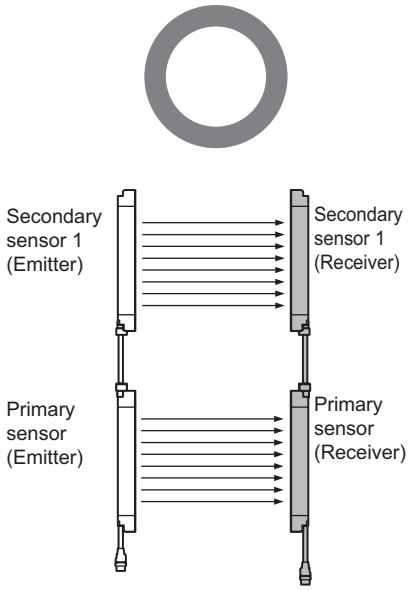

Do not series-connect an emitter and receiver. They will enter lockout state.

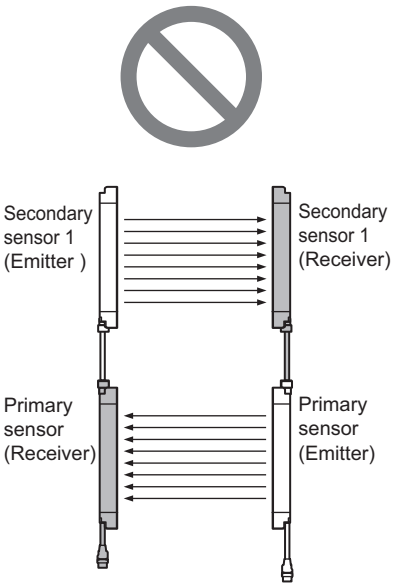

Do not face different models of emitters and receivers toward each other. They will enter lockout state or will be unable to detect objects.

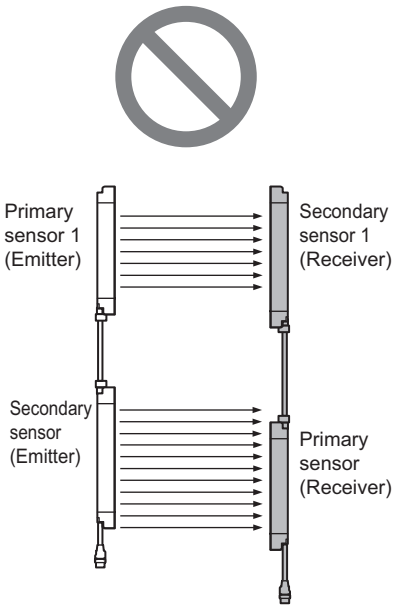

CHECK!

If caps and series connection cables are not connected properly, the F3SJ enters lockout (when power is turned ON).

Connection Procedure

■ When Using the F39-JJR□L Series Connection Cable for Close Contact (sold separately)

1. Remove the connection cable of the secondary-side F3SJ. (driver comes with F39-JJR□L)
2. Remove the cap from the secondary-side F3SJ.
3. Use the F39-JJR□L series connection cable for close contact to connect them.

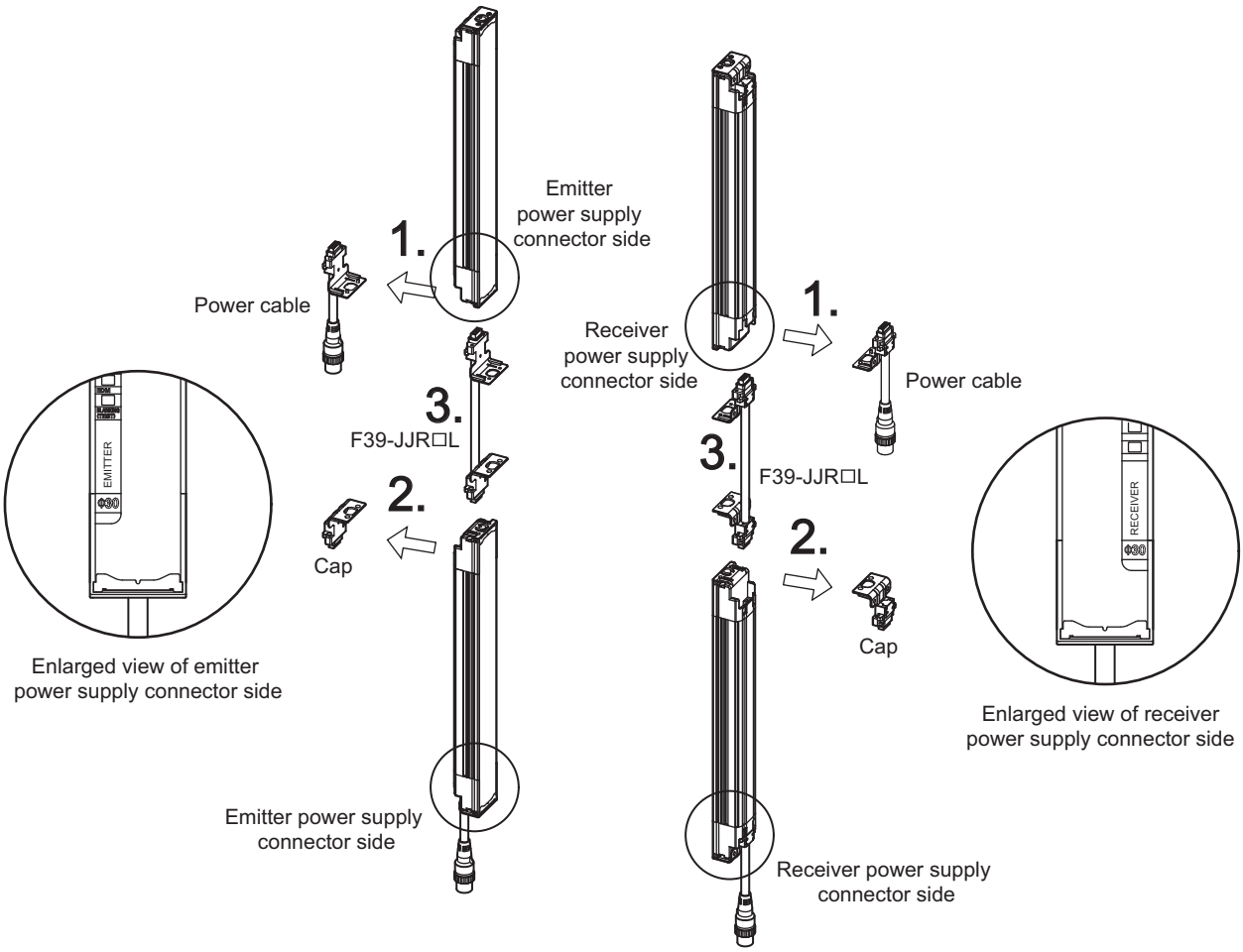

CHECK!

- Attaching/detaching of a cap or a series-connection cable may cause misalignment of rubber grommet in a connector assembly. Press the grommet to the bottom of the connector and attach the connector F3SJ again.

p.60

- Use the F39-JJR□L series connection cable for close contact when the connection distances between F3SJ are short for a L-shaped configuration, and use the F39-JJR3W (and F39-JD□B) series connection cable for extension when the connection distances are long.
  Ex.: L-shaped configuration

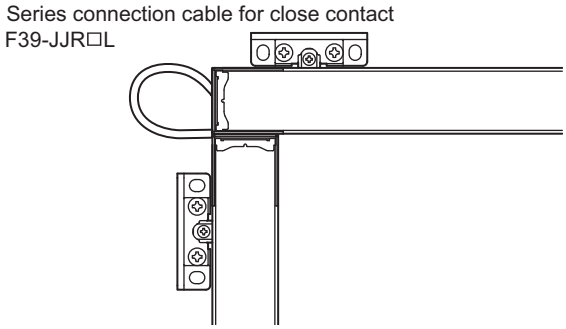

■ When Using the F39-JJR3W Series Connection Cable for Extension (sold separately)

1. Remove the caps from the primary sensor. (driver comes with key cap for muting)
2. Use the F39-JJR3W series connection cable for extension to connect them.
3. When changing the connection distance between the F3SJ, connect a double-ended cable F39-JD□B (optional).

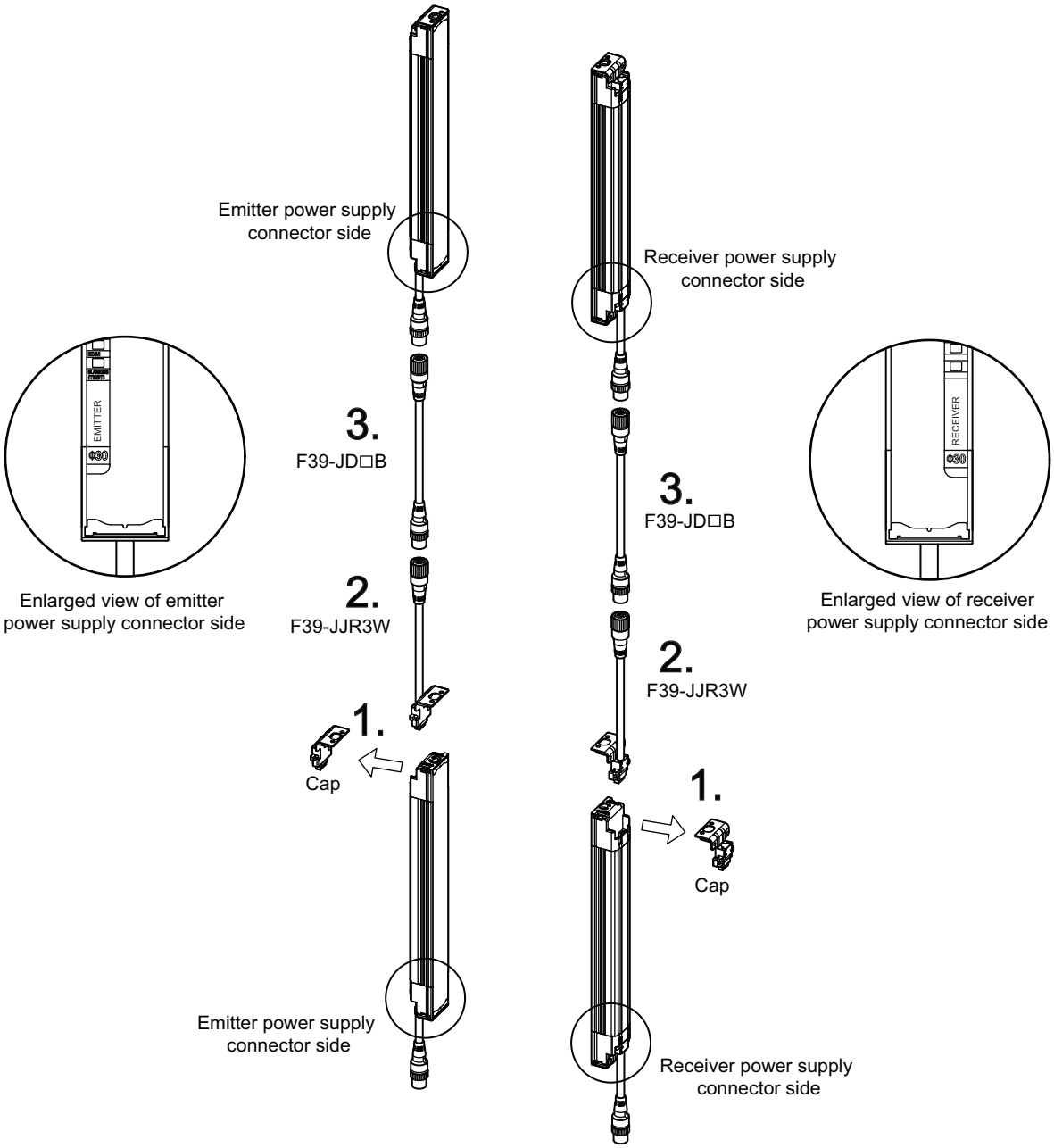

CHECK!

- When attaching a cable or a cap, tightly fasten the screws (M2, in 4 places, recommended torque: 0.15N•m). Failure to do so may cause the cable/cap to come loose, leading to deterioration of the protective functions.
- Attaching/detaching of a cap or a series-connection cable may cause misalignment of rubber grommet in a connector assembly.
  Press the grommet to the bottom of the connector and attach the connector F3SJ again.

p.60

Attaching External Indicators

An external indicator can be connected and turned ON based on the operation of the F3SJ. Indicators can be attached to emitters and/or receivers.

Example:

- Indicate that the F3SJ is in lockout
- Indicate that a machine is stopped (safety output is OFF)
- Indicate that the F3SJ is in muting or override

⚠ WARNING

Do not use the auxiliary output or external indicator output for safety applications.
Human body may not be detected when F3SJ fails, resulting in serious injury.

Connection Procedure

1. Remove the cap from the side (emitter or receiver) to which you want to attach the external indicator. (driver comes with F39-A01P□-PAC, F39-JJ3N)
2. Attach the external indicator.

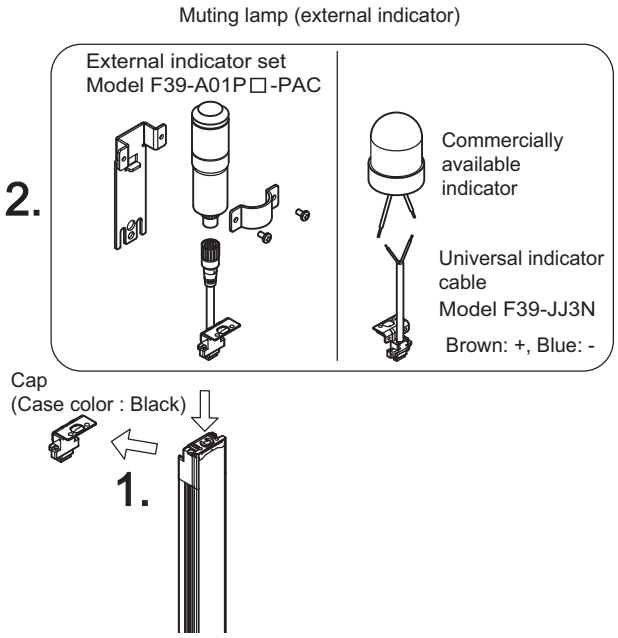

Recommended items

Name	Model name	Description
External indicator set	F39-A01P□-PAC	A set consisting of an LED indicator, connection cable, and mounting brackets. The LED indicator is available in red, green, or yellow.
Universal indicator cable	F39-JJ3N	Available external indicators - Incandescent lamp: 24VDC, 3 to 7W - LED lamp: Load current 300mA max.

CHECK!

- When attaching a cable or cap, tightly fasten the screws (M2, in 4 places, recommended torque: 0.15N•m). Failure to do so may cause the cable/cap to come loose, leading to deterioration of the protective functions.

- Attaching/detaching of a cap or a series-connection cable may cause misalignment of rubber grommet in a connector assembly.
  Press the grommet to the bottom of the connector and attach the connector F3SJ again.

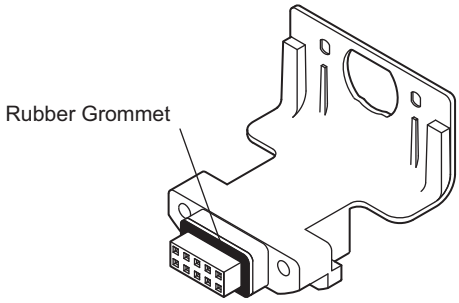

Rubber Grommet in Right Position

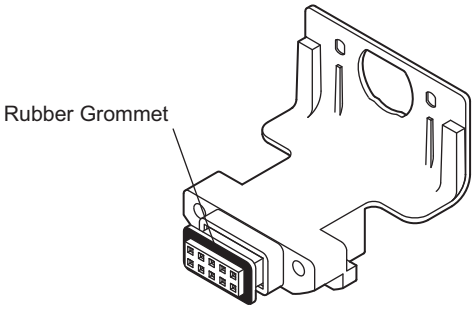

Misaligned Grommet

Output Operation

The external indicator output 1 (on the receiver side) is configured as "safety output reverse output (ON when blocked)", while the external indicator output 2 (on the emitter side) is configured as "lockout output (ON during lockout)".
When the muting function is used, both the emitter and receiver are configured as muting/override output (Blinking during muting and during override).

Timing chart of basic system

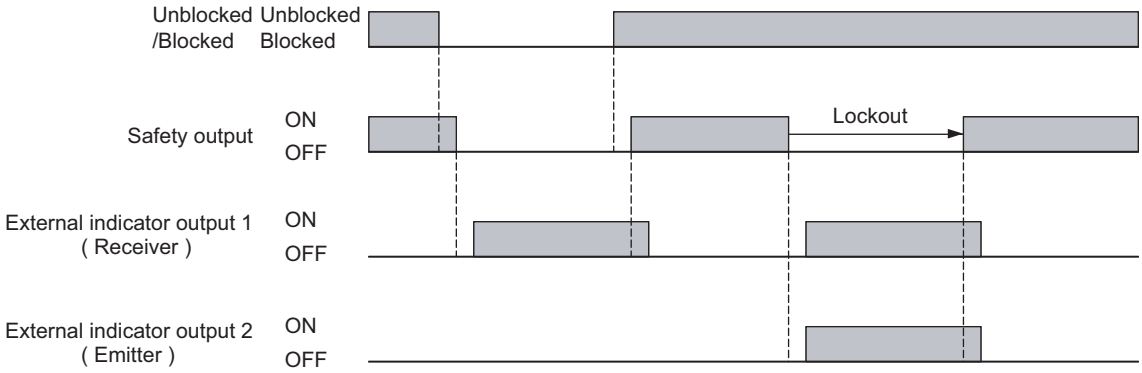

Dimensions

When Using Standard Mounting Brackets

■ Backside Mounting

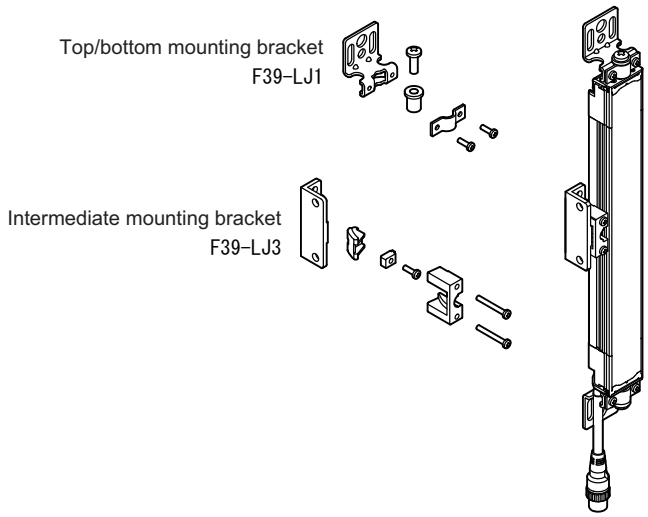

CHECK! The adjustment angle of F39-LJ3 is from -10deg to +10deg.

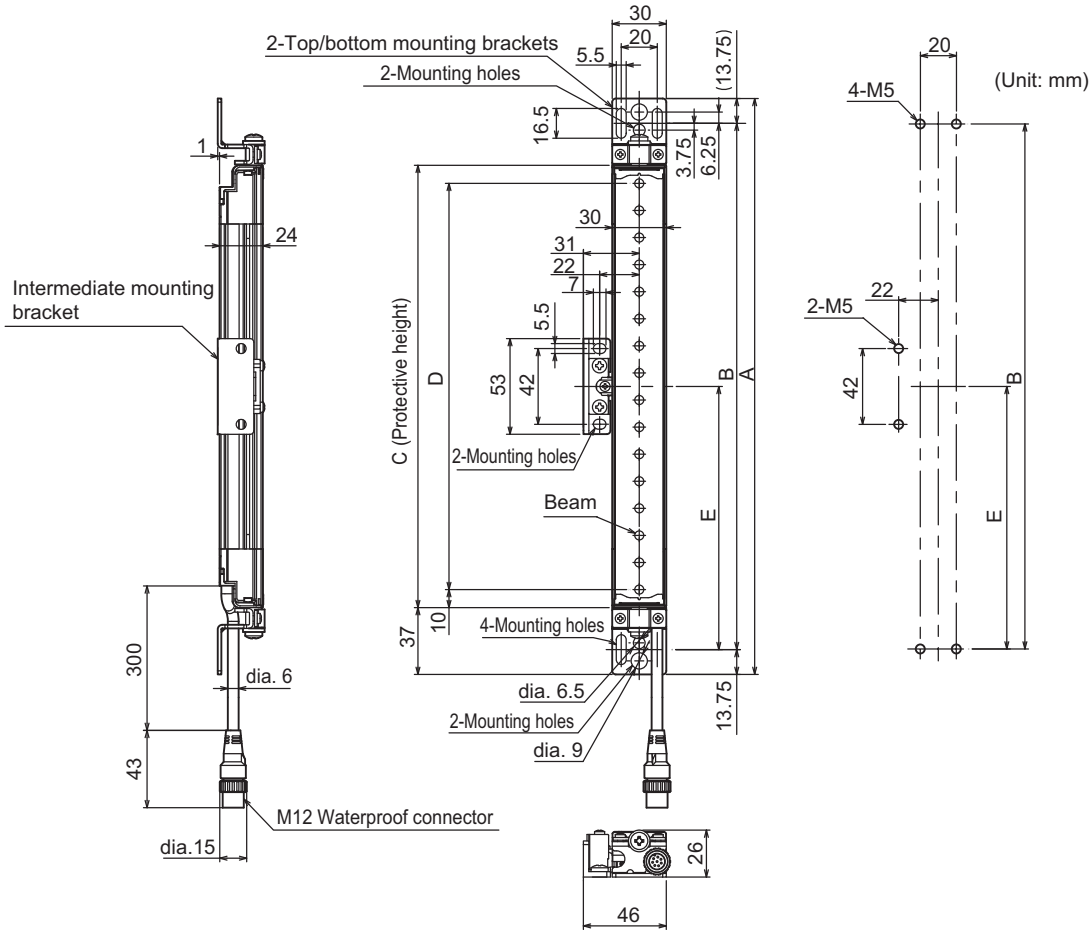

Bracket mounting procedure (Mounting) p.82

■ Side Mounting

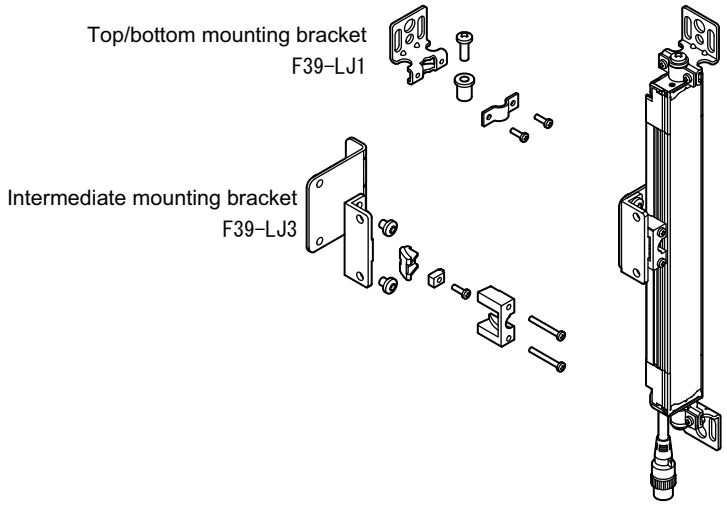

CHECK!

The adjustment angle of F39-LJ3 is from -10deg to +10deg.

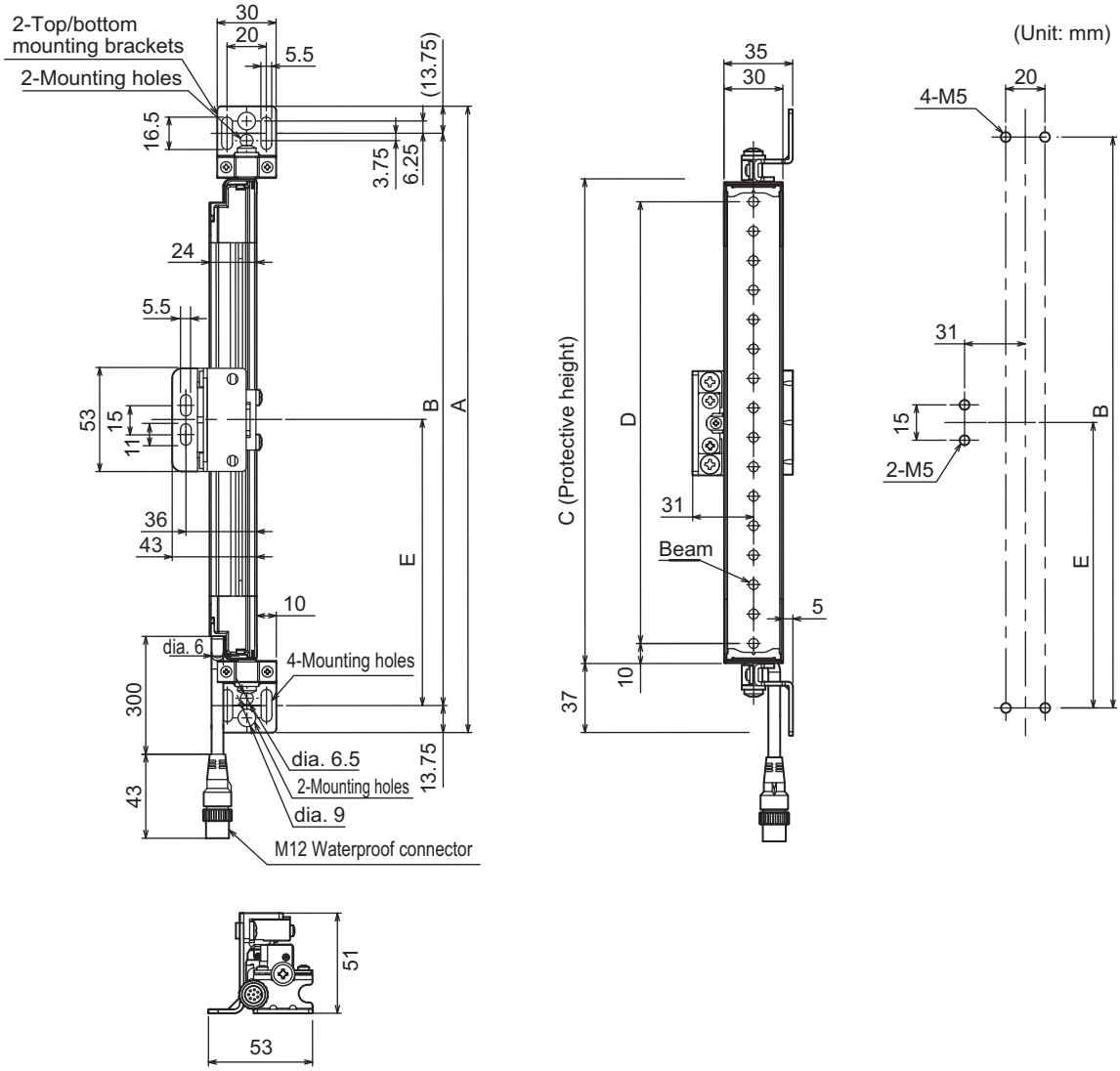

Bracket mounting procedure (Mounting) p.82

Dimensions A to E

A	C + 74
B	C + 46.5
C	4-digit number of the model name (protective height)
D	C - 20
E	Depends on the protective height. See the table below.

Dimension E

Protective height	Number of intermediate mounting brackets	E*1
0245 to 0596	0	-
0600 to 1130	1	B/2
1136 to 1658	2	B/3
1660 to 2180	3	B/4
2195 to 2500	4	B/5

*1. Use E = 530 or less when none of the E values shown above are used.

■ Dimensions of Standard Brackets (top/bottom mounting brackets)

(Unit: mm)

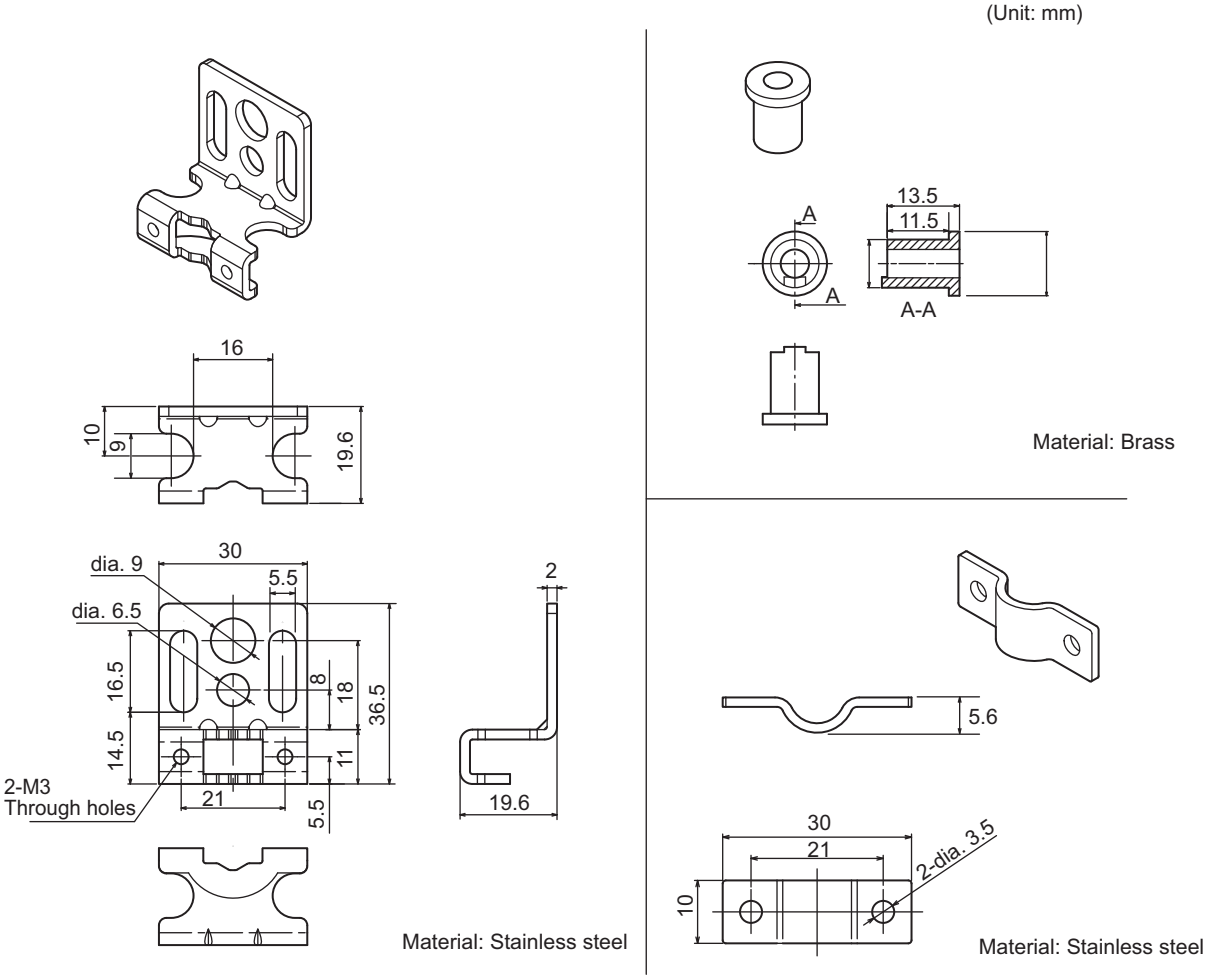

When Using Optional Mounting Brackets

■ F39-LJ2 Side-mounting Optional Bracket

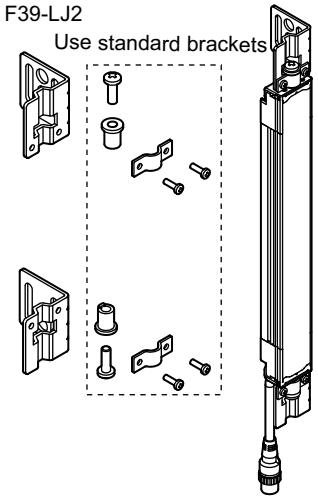

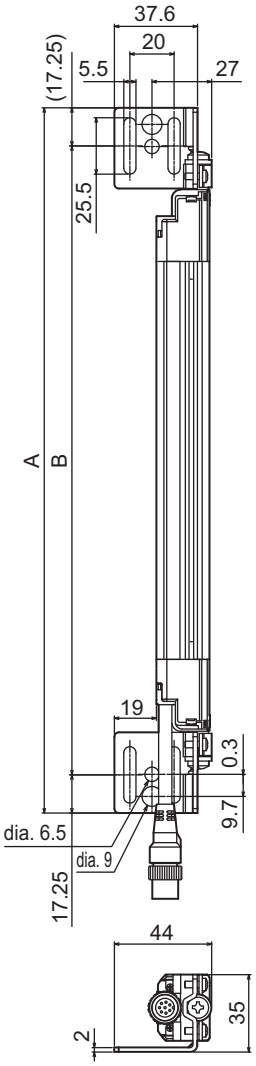

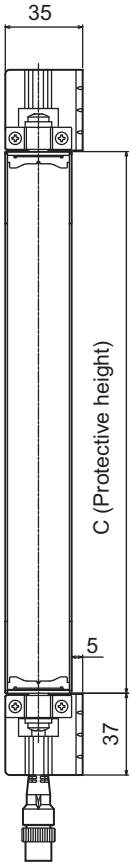

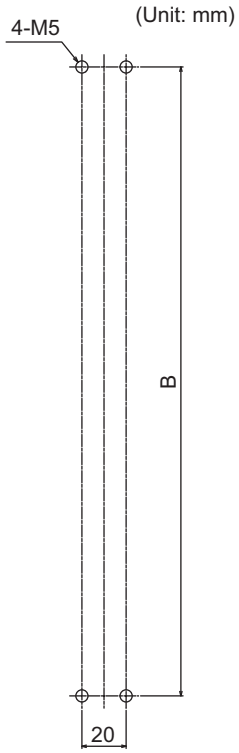

Material: Stainless steel

Dimensions A to C

A	C + 74
B	C + 39.5
C	4-digit number of the model name (protective height)

■ F39-LJ3 Free-location Mounting Bracket

Backside mounting

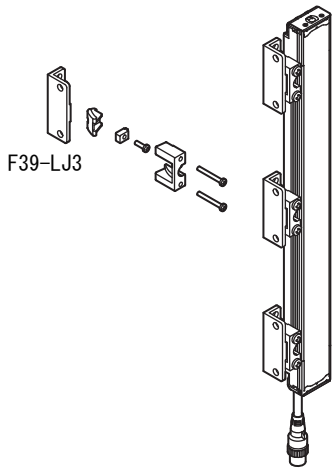

CHECK!

The adjustment angle of F39-LJ3 is from -10deg to +10deg.

(Unit: mm)

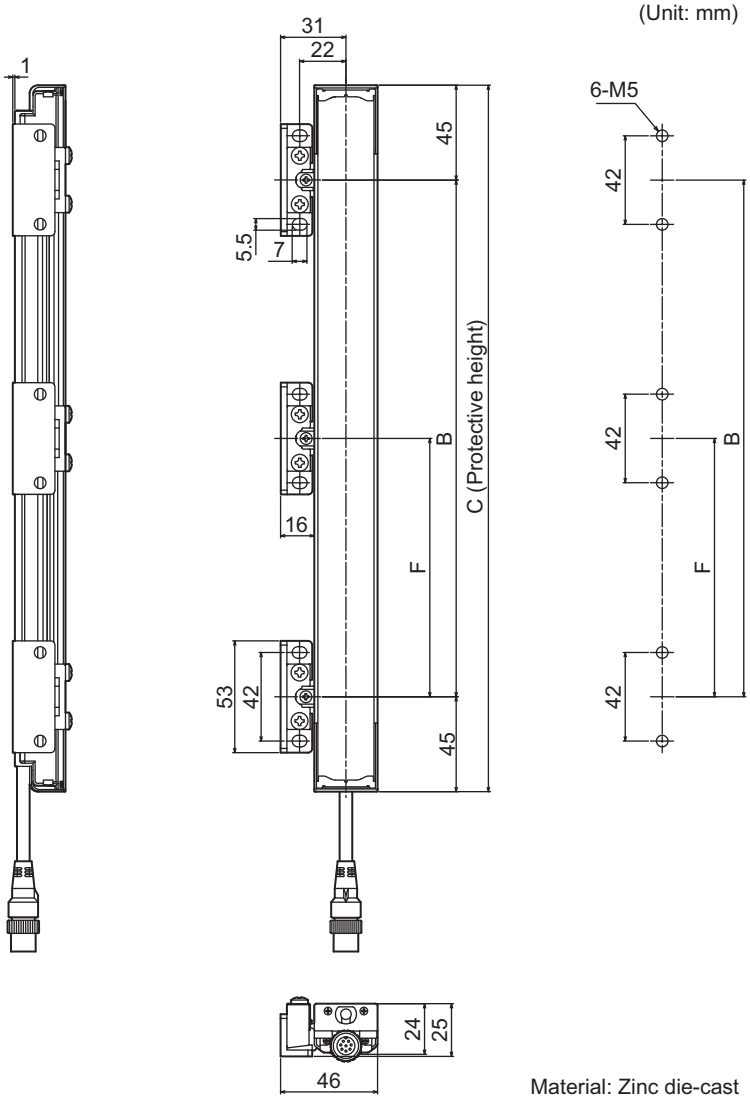

Material: Zinc die-cast

Side mounting (when using intermediate brackets for side mounting)

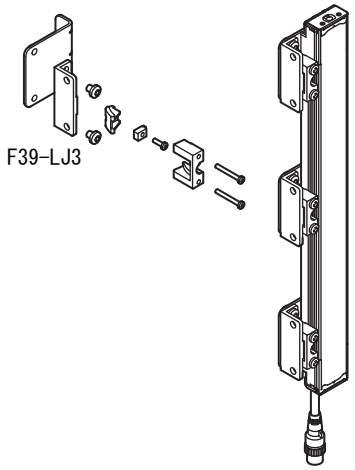

CHECK!

The adjustment angle of F39-LJ3 is from -10deg to +10deg.

(Unit: mm)

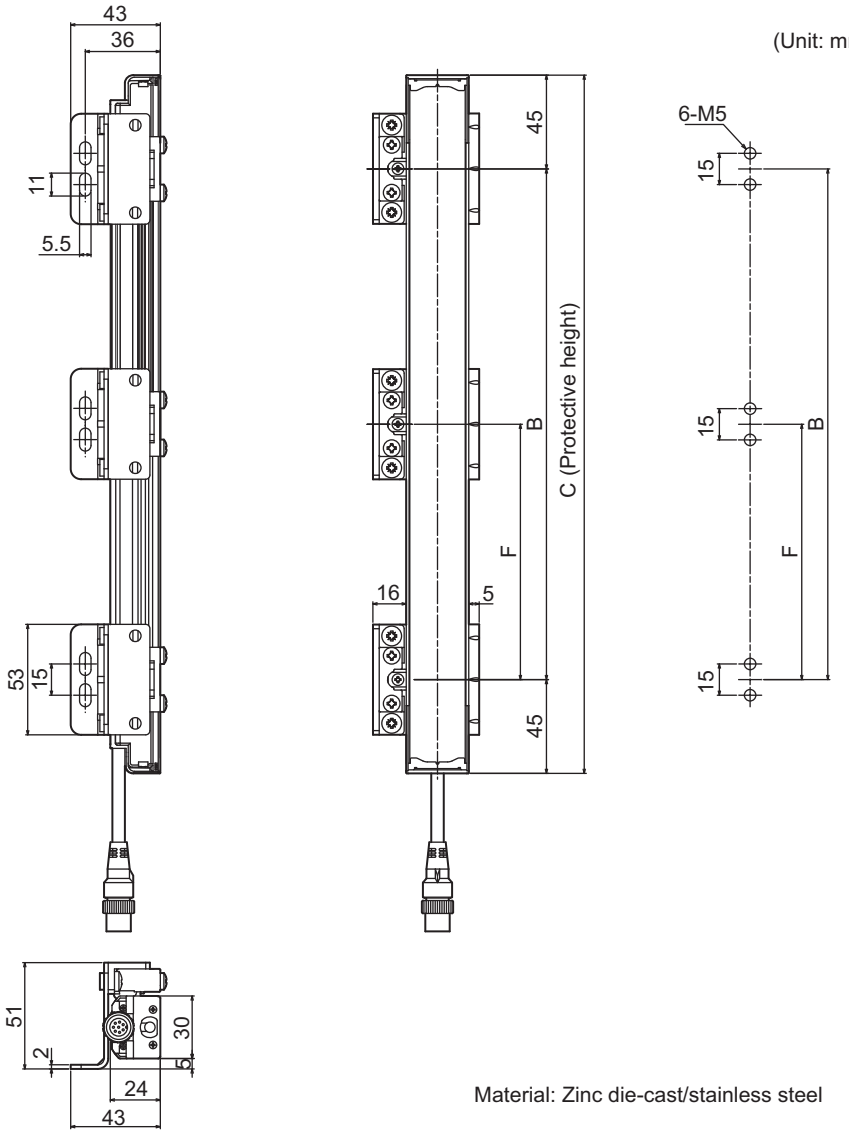

Material: Zinc die-cast/stainless steel

Side mounting (when not using intermediate brackets for side mounting)

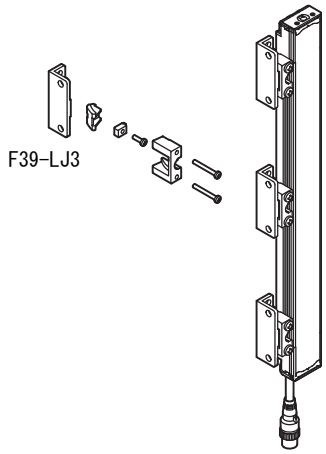

CHECK!

The adjustment angle of F39-LJ3 is from -10deg to +10deg.

(Unit: mm)

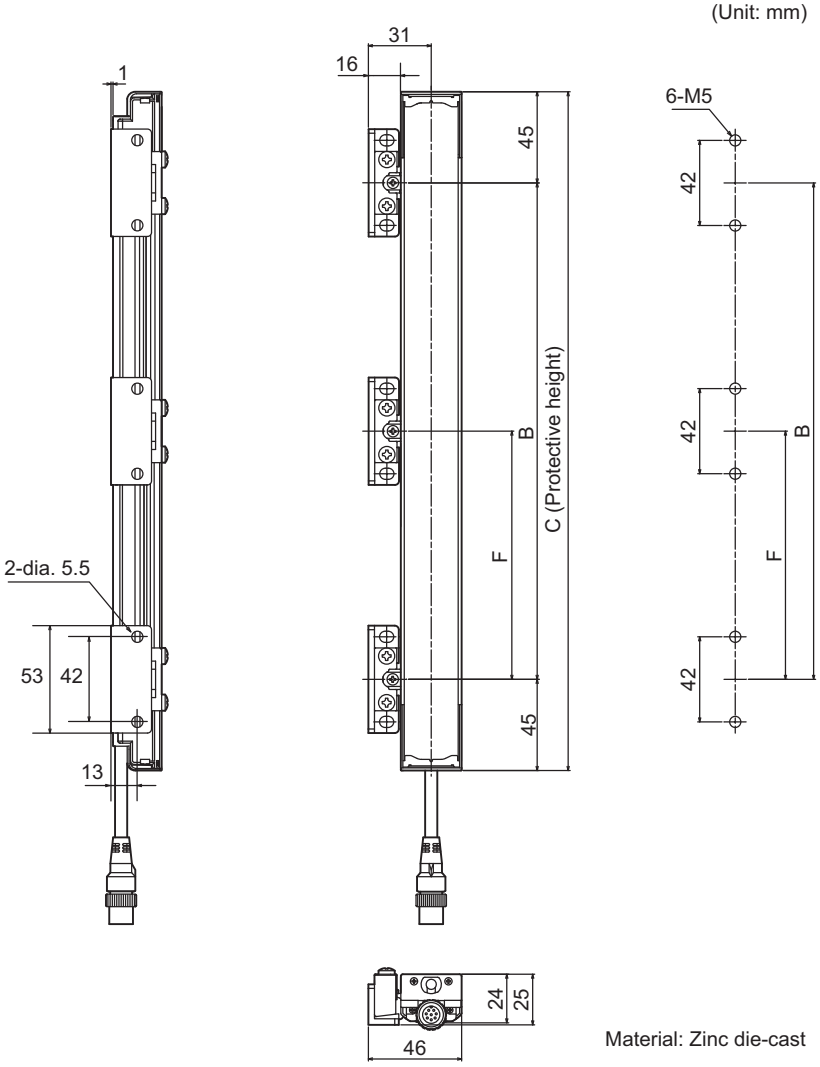

Material: Zinc die-cast

CHECK!

When performing side mounting without using intermediate brackets for side mounting, F39-LJ3 brackets cannot be used in combination with standard brackets.

Dimensions B, C, and F

B	C - 90
C	4-digit number of the model name (protective height)
F	Depends on the protective height. See the table below.

Dimension F

Protective height	Number of intermediate mounting brackets	F*1
245 to 440	2	-
443 to 785	3	B/2
794 to 1140	4	B/3
1145 to 1490	5	B/4
1495 to 1840	6	B/5
1845 to 2180	7	B/6
2195 to 2500	8	B/7

*1. Use F = 350 or less when none of the F values shown above are used.

When only F39-LJ3 free-location mounting brackets are used without standard brackets, allow a space of at least 350mm between the brackets. The number of brackets required varies according to the protective height. For details about the number of required brackets, refer to the table below.
The intermediate mounting brackets shipped with the product are the same as the F39-LJ3 free-location mounting brackets. Purchase brackets as necessary if there are fewer intermediate mounting brackets than required. When intermediate mounting brackets are included, they can be used as free-location mounting brackets.

Required number of F39-LJ3 free-location mounting brackets (2 pieces are included with F39-LJ3) for 1 F3SJ set (emitter/receiver)

Protective height	Number of free-location mounting brackets included as intermediate mounting brackets	Number of free-location mounting brackets required for mounting F3SJ	Number of additional free-location mounting bracket sets (number of brackets) that need to be purchased
245 to 440	0	4	2 sets (4)
443 to 596	0	6	3 sets (6)
600 to 785	2	6	2 sets (4)
794 to 1130	2	8	3 sets (6)
1136 to 1140	4	8	2 sets (4)
1145 to 1490	4	10	3 sets (6)
1495 to 1658	4	12	4 sets (8)
1660 to 1840	6	12	3 sets (6)
1845 to 2180	6	14	4 sets (8)
2195 to 2500	8	16	4 sets (8)

■ F39-LJ4 Top/bottom Mounting Bracket B

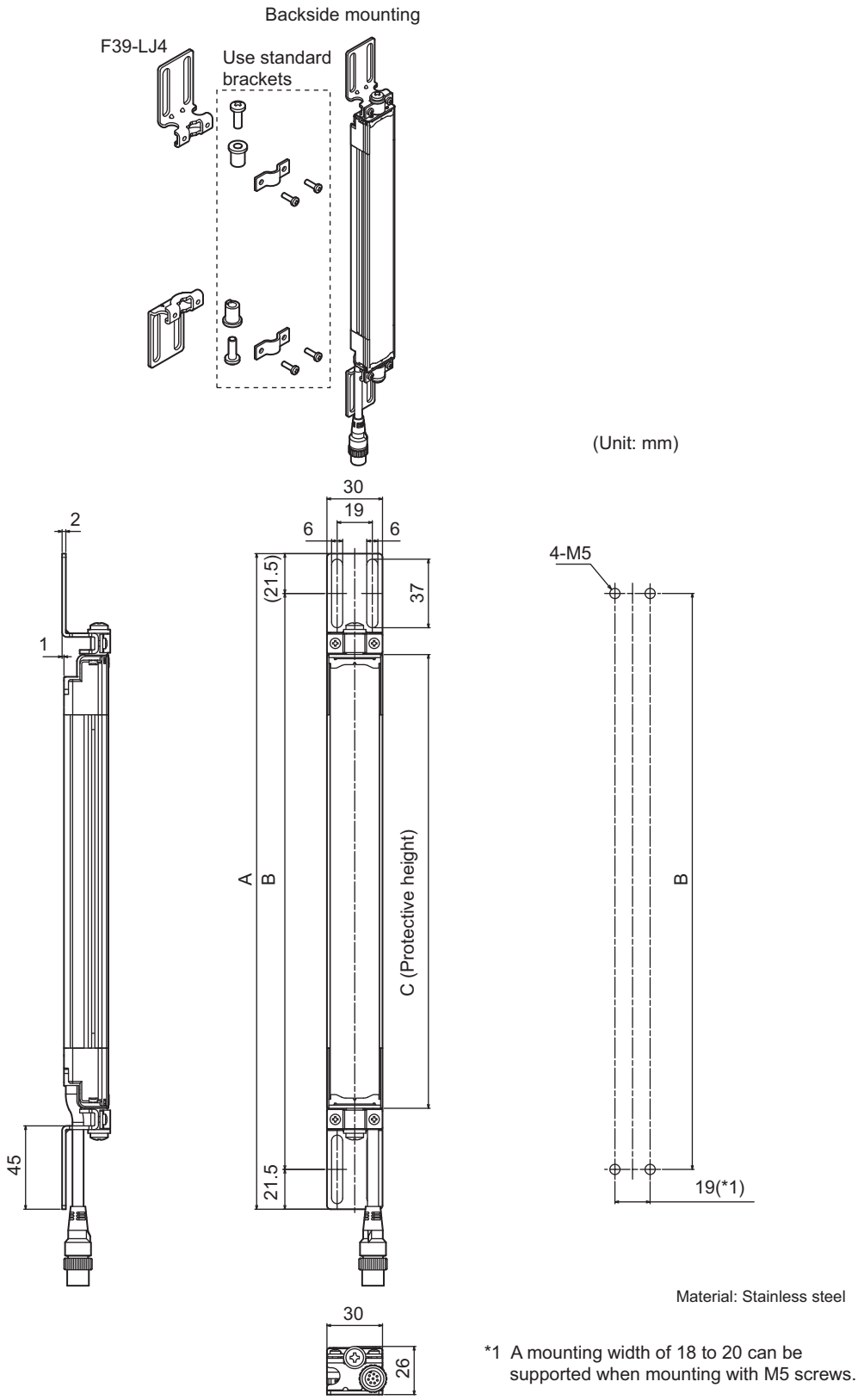

Material: Stainless steel

*1 A mounting width of 18 to 20 can be supported when mounting with M5 screws.

Dimensions A to C

A	C + 109
B	C + 66
C	4-digit number of the model name (protective height)

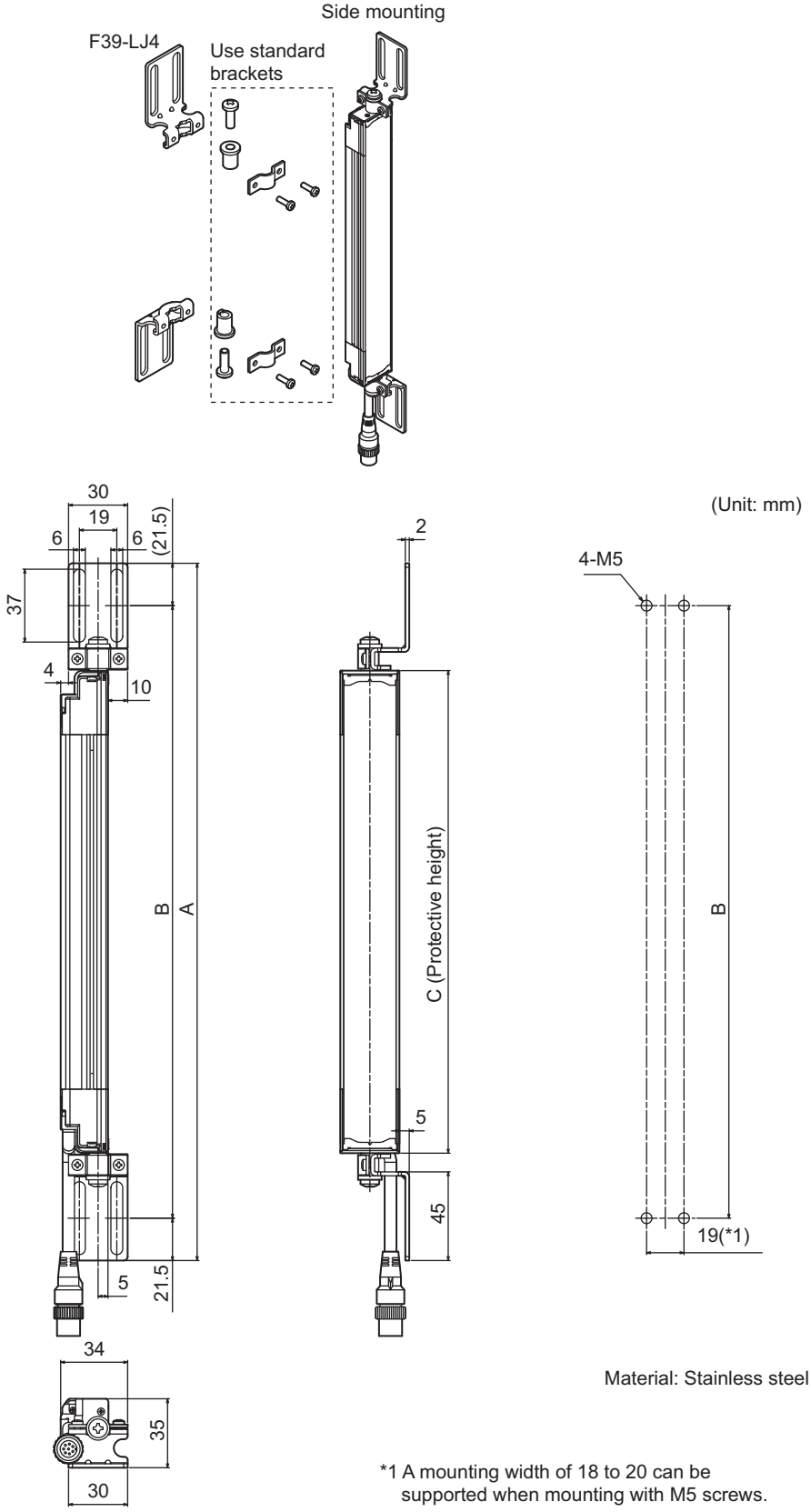

Dimensions A to C

A	C + 109
B	C + 66
C	4-digit number of the model name (protective height)

■ F39-LJ5 Replacement Bracket for F3SN

Use these replacement brackets for an F3SN with a small protective height.
(These brackets are designed for use with the F3SN's mounting holes.)

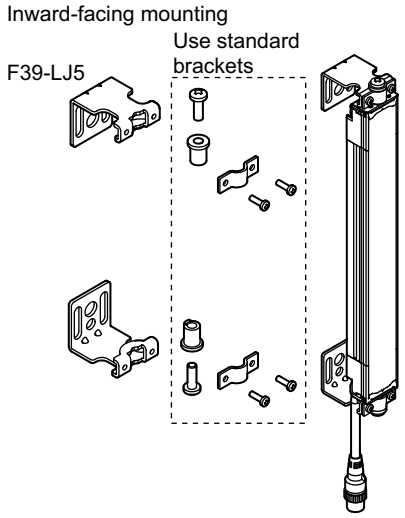

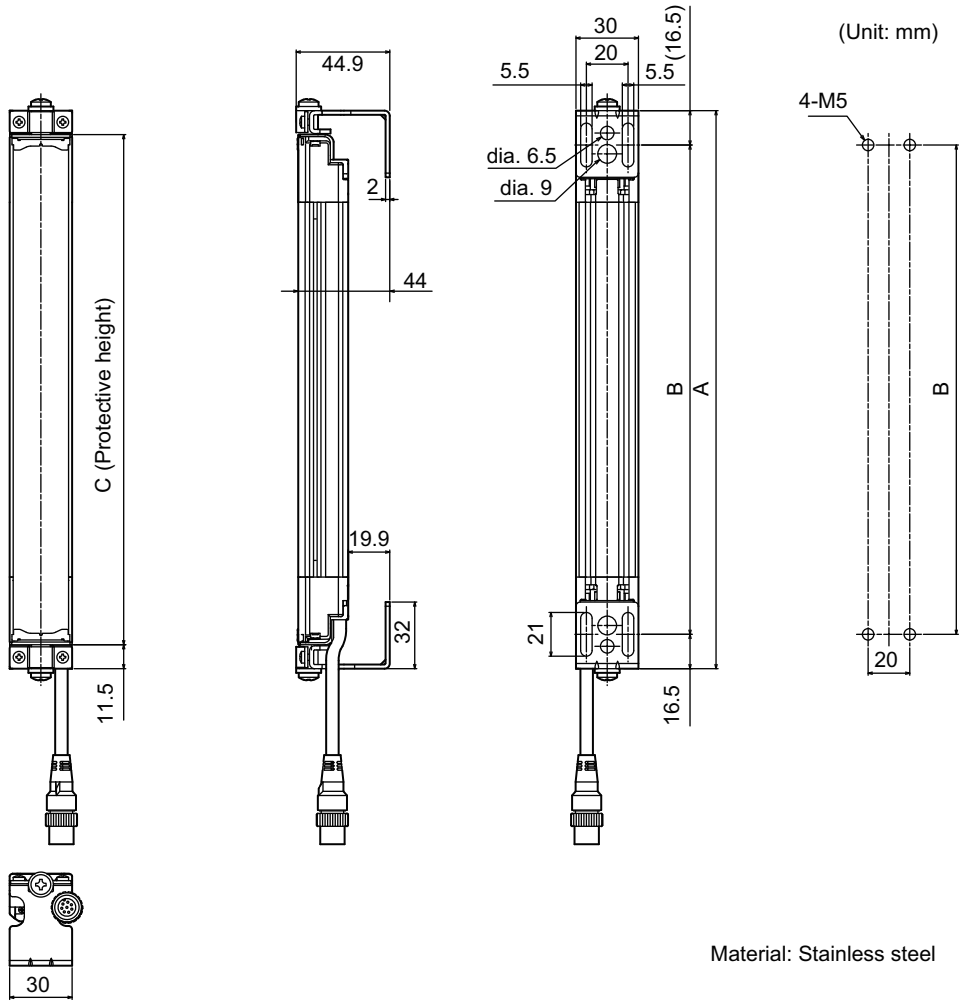

Material: Stainless steel

Dimensions A to C

A	C + 23
B	C - 10
C	4-digit number of the model name (protective height)

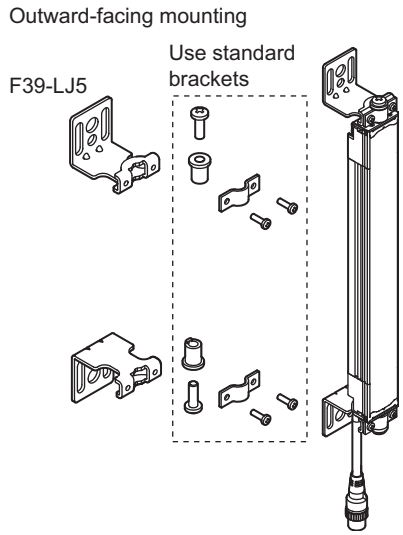

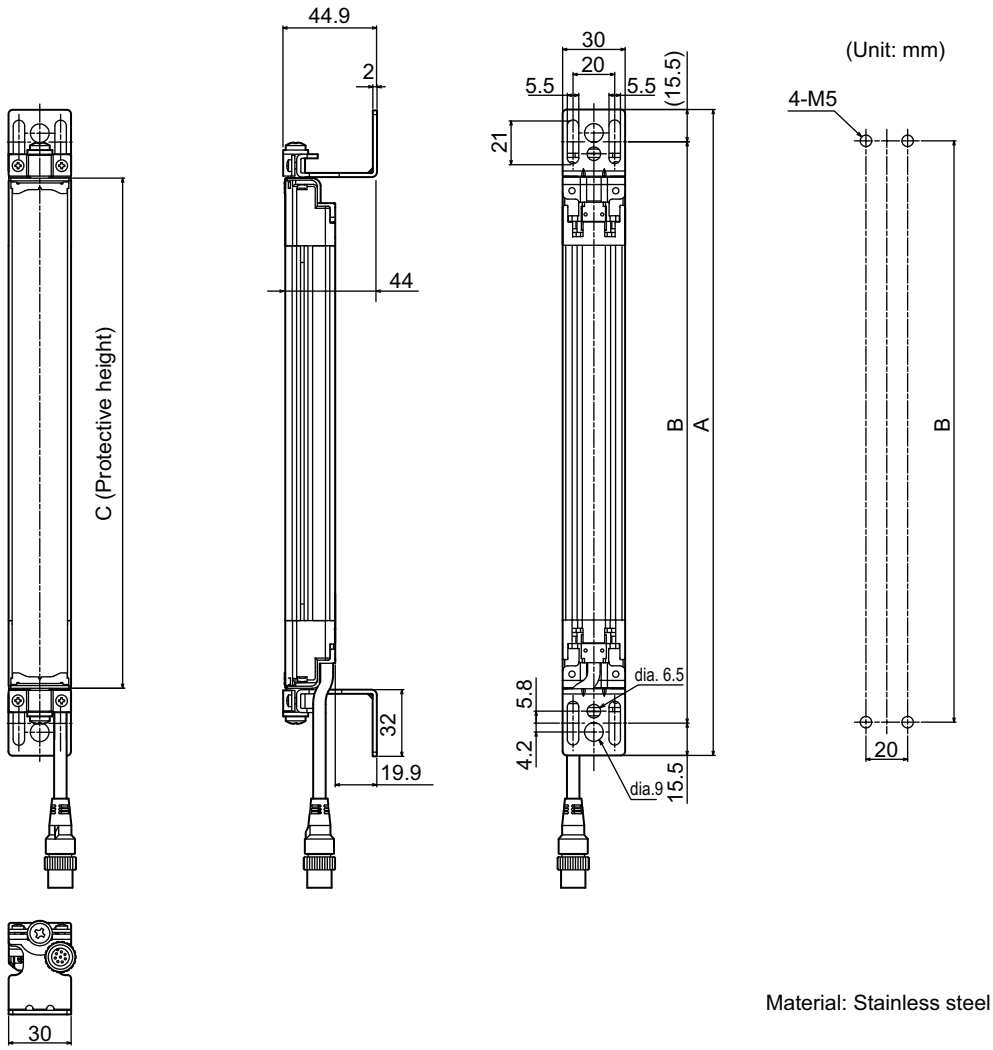

Material: Stainless steel

Dimensions A to C

A	C + 65
B	C + 34
C	4-digit number of the model name (protective height)

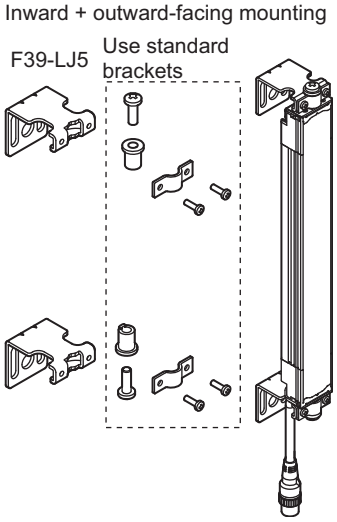

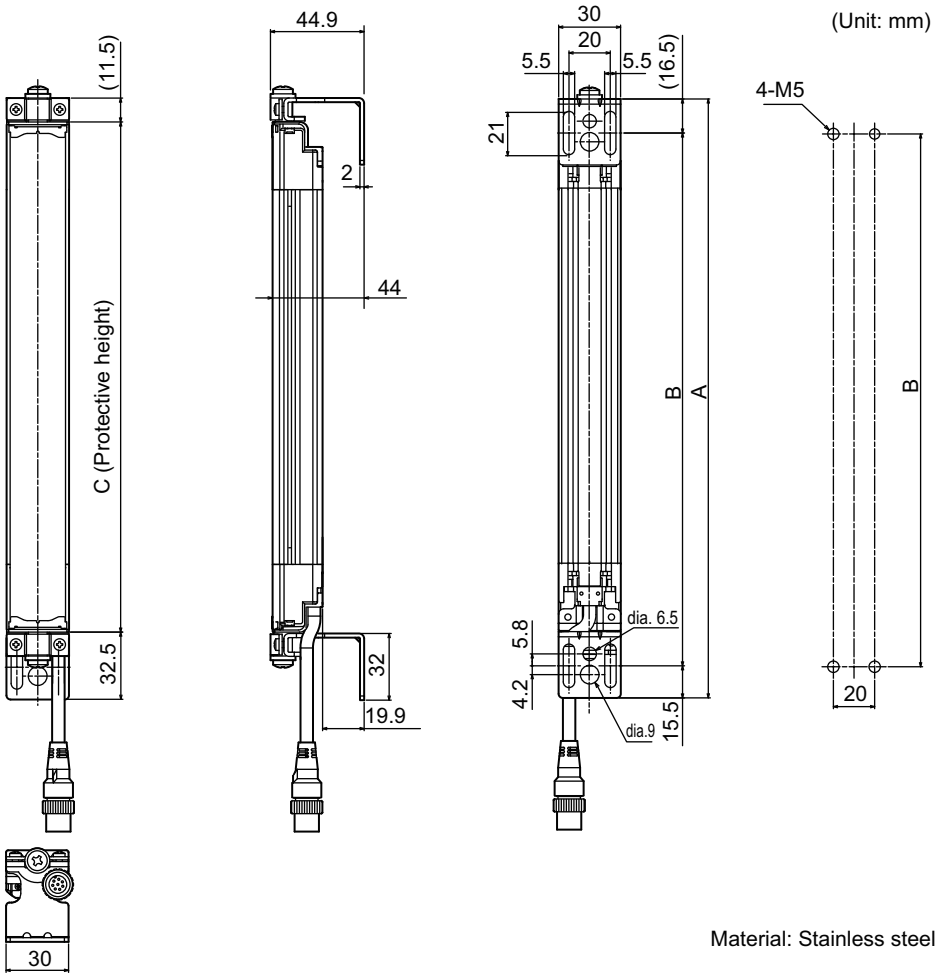

Material: Stainless steel

Dimensions A to C

A	C + 44
B	C + 12
C	4-digit number of the model name (protective height)

F3SN replacement correspondence table (F3SN mounting holes can be used without modification)

•When replacing F3SN-□□□□□P25 with F3SJ-A□□□□P25-01TS

F3SN		Replacement F3SJ		Replacement method using F39-LJ5
Model name	Protective height	Model name	Protective height	
F3SN-□0187P25	187	-	-	-
F3SN-□0217P25	217	F3SJ-A0260P25-01TS	260	Inward-facing mounting
F3SN-□0232P25	232	F3SJ-A0260P25-01TS	260	Inward + outward-facing mounting
F3SN-□0247P25	247	F3SJ-A0260P25-01TS	260	Inward + outward-facing mounting
F3SN-□0262P25	262	F3SJ-A0260P25-01TS	260	Outward-facing mounting

For lengths greater than the F3SN-□0277P25:

Subtract a number, ranging from 7 to 22, from the F3SN's 4-digit number and apply it as the F3SJ's 4-digit number, and then replace with the standard brackets included with the product.

[Selection example] F3SN-A0322P25 becomes F3SJ-A0300P25-01TS (replace with standard brackets)

The formula shown above is recommended for mounting in the center of a mounting hole. If a mounting position is unmatched, another mounting hole must be drilled.

CHECK!

- The protective height becomes shorter by 7 to 22mm.
- Replace with outward-facing mounting of F39-LJ5 when you want to set the detection surface height to be same as the F3SN.

However, the F39-LJ5 and intermediate mounting brackets cannot be mounted simultaneously, so set the protective height to 600mm or less.

■ F39-LJ8 Space-saving Mounting Bracket

Brackets that can save mounting space for top and bottom

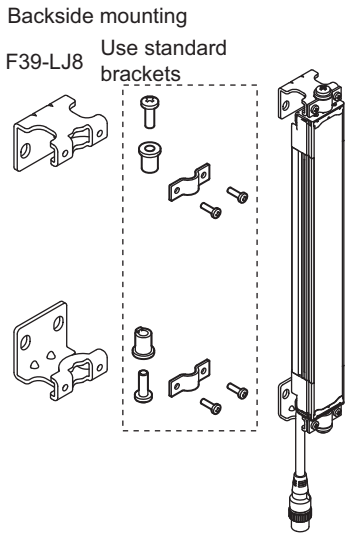

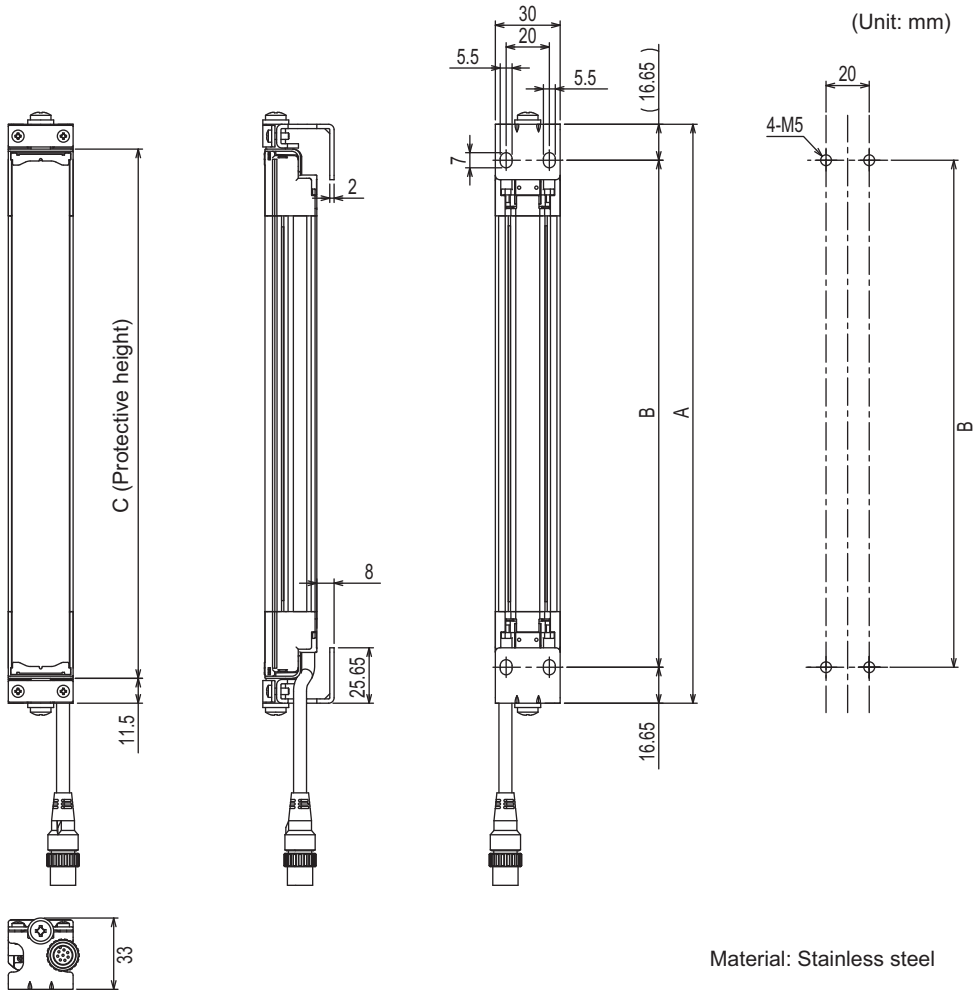

Material: Stainless steel

Dimensions A to C

A	C + 23
B	C - 10.3
C	4-digit number of the model name (protective height)

CHECK!

The F39-LJ8 and intermediate mounting brackets cannot be mounted simultaneously, so set the protective height to 600mm or less.

■ F39-LJ11 Top/bottom Mounting Bracket C

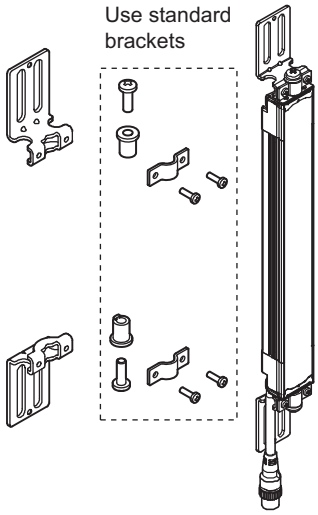

(Unit: mm)

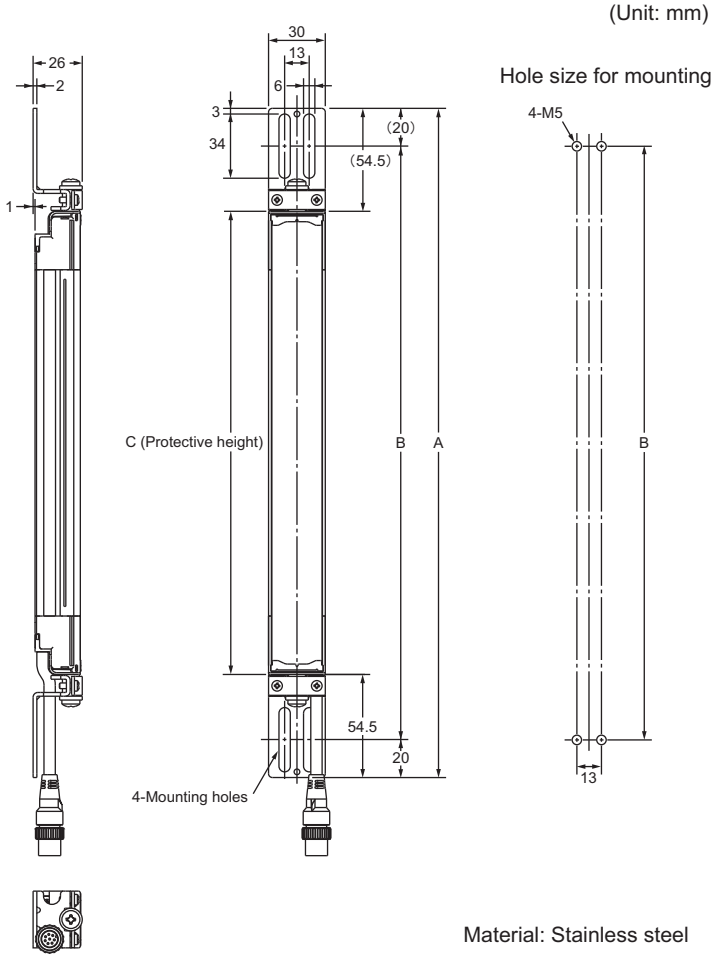

Material: Stainless steel

Dimensions A to C

A	C + 109
B	C + 69
C	4-digit number of the model name (protective height)

F39-A01P□-PAC External Indicator Set

•F39-A01P□-PAC

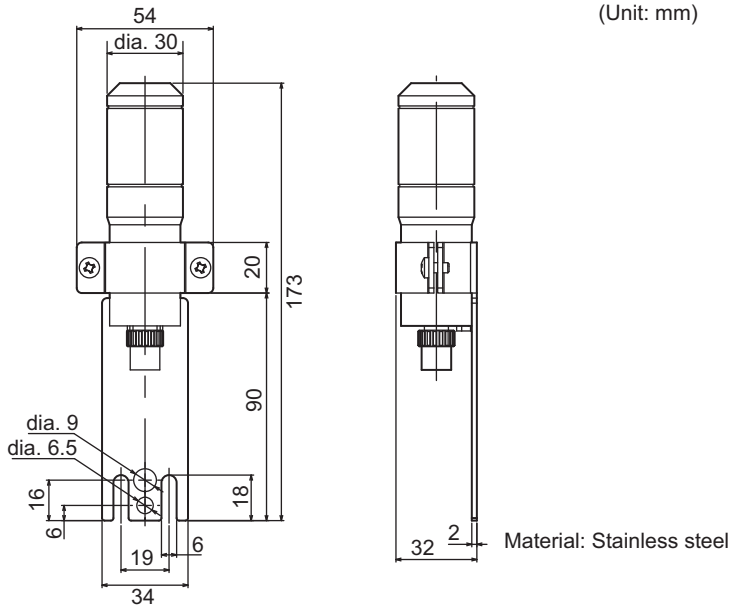

When Using Spatter Protection Covers

■ Dimensions of the Spatter Protection Cover F39-HJ□□□□

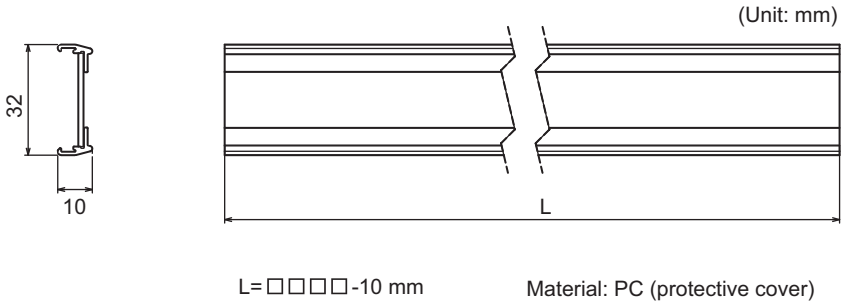

■ Assembly Dimensions

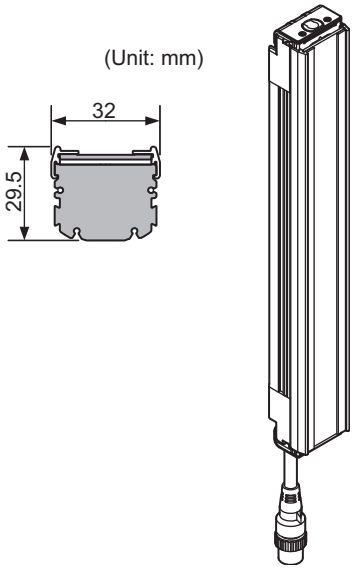

Mounting a Protect Bar

■ External Dimensions of Protect Bar F39-PJ□□□□

Backside mounting

(Unit: mm)

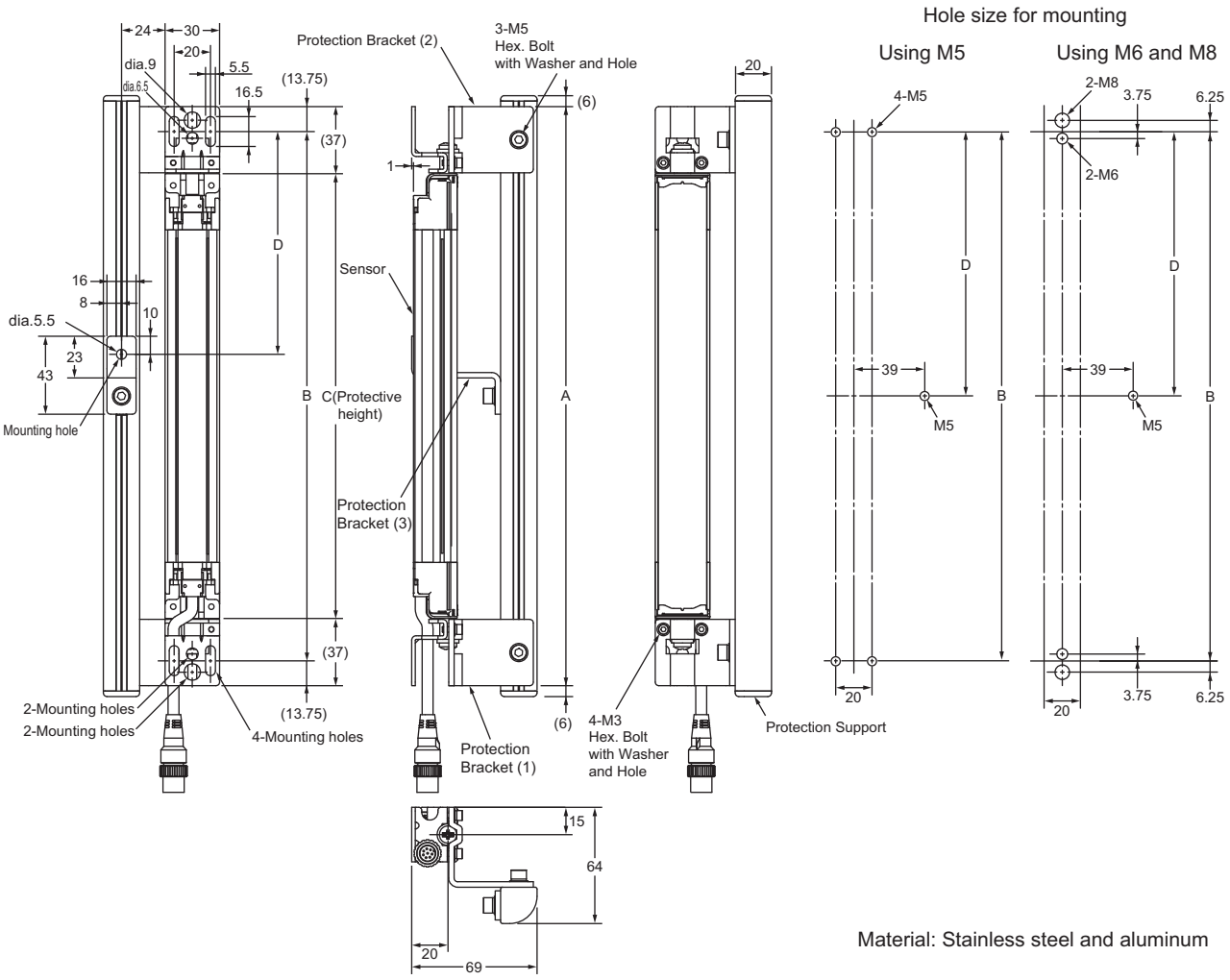

Material: Stainless steel and aluminum

Dimensions A to C

A	C+74
B	C+46.5
C	4-digit number of the model name (protective height)

Dimension D

Protective height	Number of used protection brackets (3)	D *1
245 to 1000	0	-
1001 to 2000	1	B/2
2009 to 2500	2	B/3

*1 D is for reference and must be a length that should not affect intermediate mounting bracket

Side mounting

(Unit: mm)

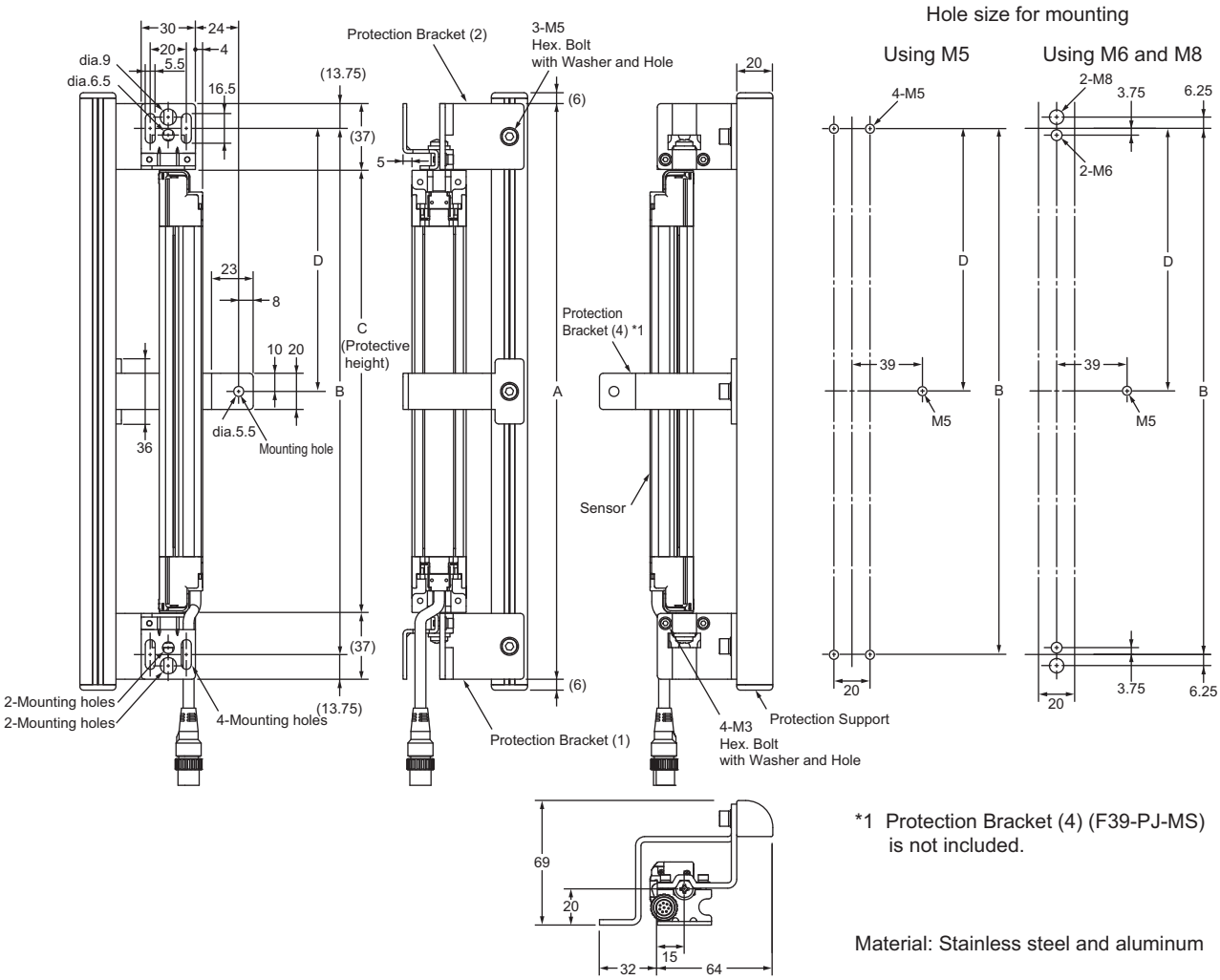

*1 Protection Bracket (4) (F39-PJ-MS) is not included.

Material: Stainless steel and aluminum

Dimensions A to C

A	C+74
B	C+46.5
C	4-digit number of the model name (protective height)

Dimension D

Protective height	Number of used protection brackets (4)	D *2
245 to 1000	0	-
1001 to 2000	1	B/2
2009 to 2500	2	B/3

*2 D is for reference and must be a length that should not affect intermediate mounting bracket

Mounting an Environment-Resistant Case

■ External Dimensions of Environment-Resistant Case F39-EJ□□□□

Backside mounting

(Unit: mm)

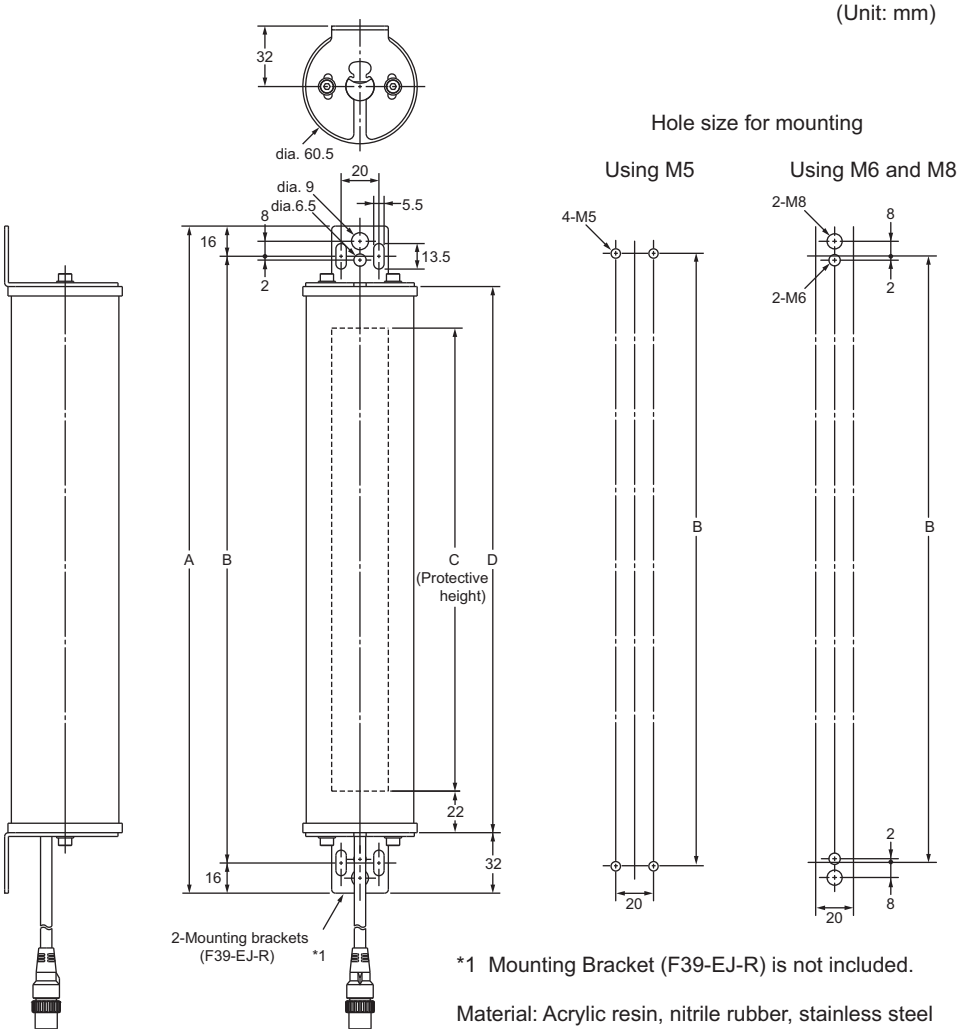

*1 Mounting Bracket (F39-EJ-R) is not included.

Material: Acrylic resin, nitrile rubber, stainless steel

Dimensions A to D

A	C+108
B	C+76
C	4-digit number of the model name (protective height)
D	C+44

Side mounting

(Unit: mm)

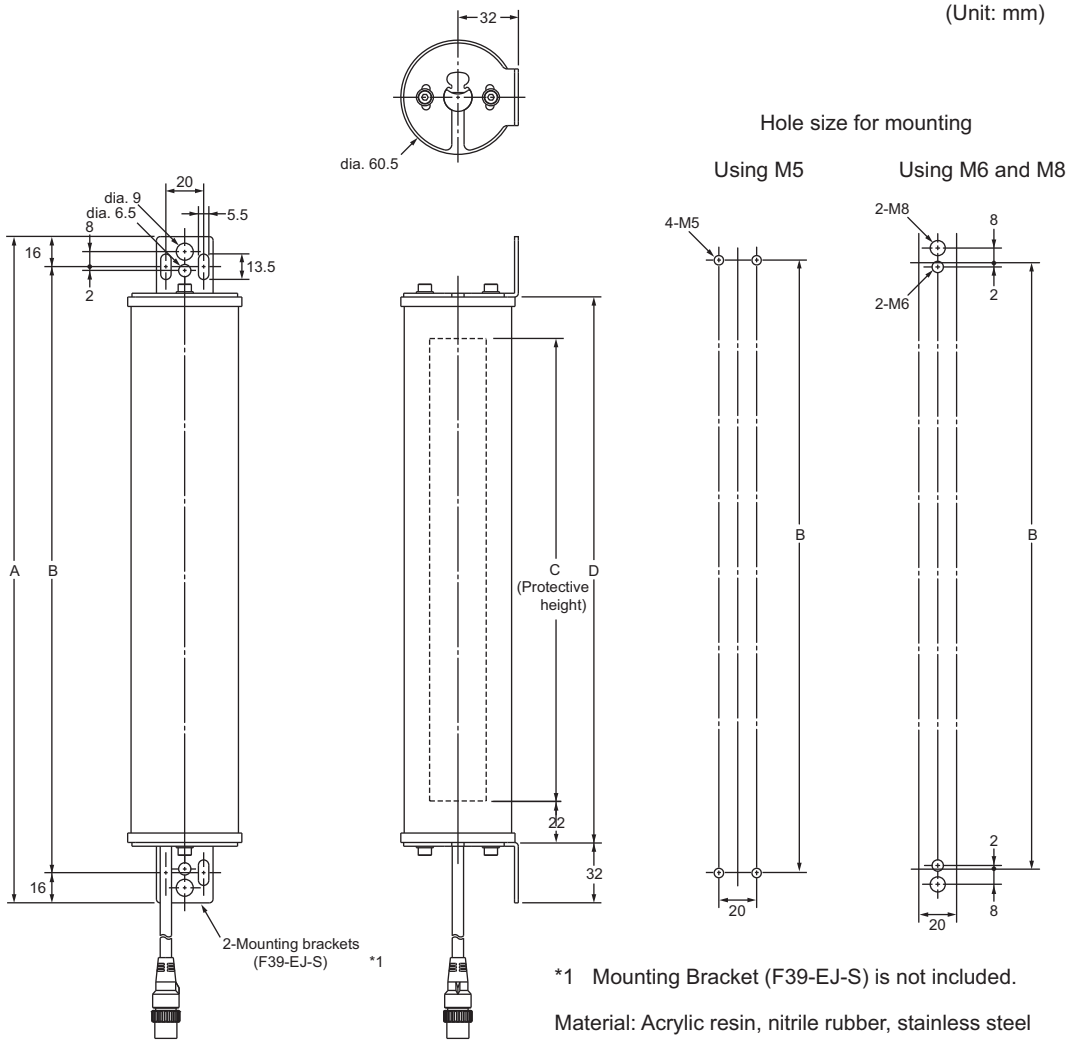

*1 Mounting Bracket (F39-EJ-S) is not included.

Material: Acrylic resin, nitrile rubber, stainless steel

Dimensions A to D

A	C+108
B	C+76
C	4-digit number of the model name (protective height)
D	C+44

Mounting

The procedures for using standard mounting brackets (included) are explained in this section.

Top/Bottom Mounting Brackets

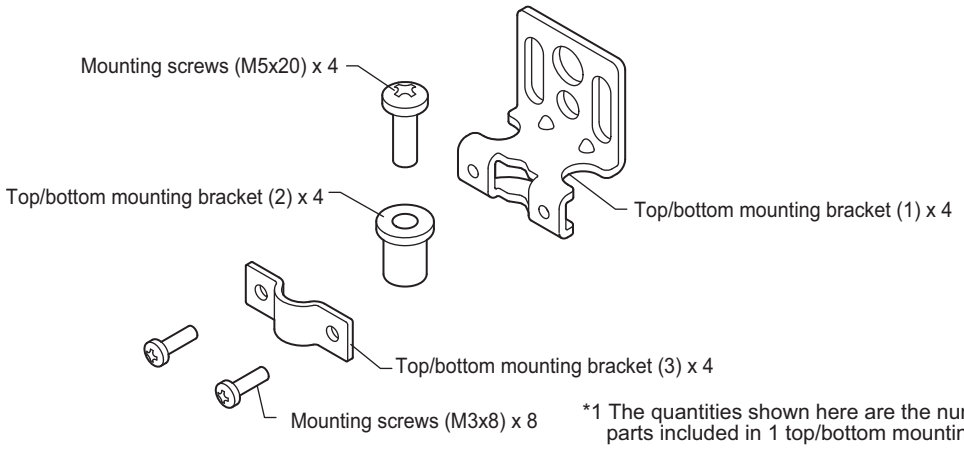

*1 The quantities shown here are the number of parts included in 1 top/bottom mounting bracket set

Material: Stainless steel (top/bottom mounting bracket (1), (3))
Brass (top/bottom mounting bracket (2))
Iron (mounting screws)

Intermediate Mounting Brackets

The number of intermediate mounting brackets included with F3SJ of various protective heights is shown below.

Protective height	Number of intermediate mounting brackets
0245 to 0596	0
0600 to 1130	1
1136 to 1658	2
1660 to 2180	3
2195 to 2500	4

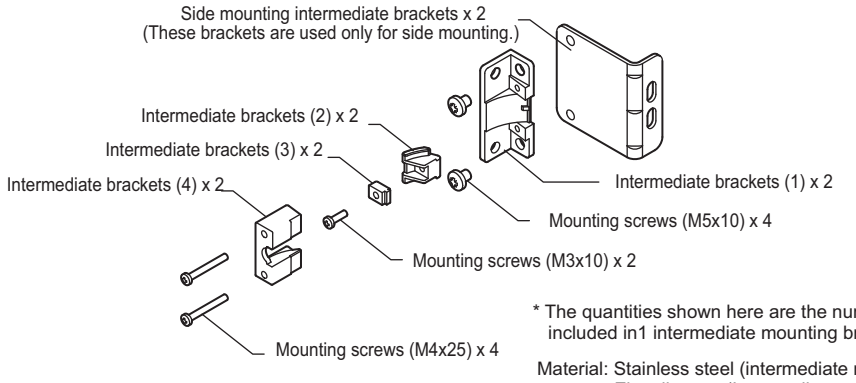

* The quantities shown here are the number of parts included in1 intermediate mounting bracket set

Material: Stainless steel (intermediate mounting bracket)
Zinc die-cast (Intermediate mounting brackets (1) to (4))
Iron (mounting screws)

CHECK!

- To use other mounting bracket or bolt than those for F3SJ, you must confirm that their sizes should match F3SJ. Especially when you do not use top/bottom mounting brackets (2), you may need screws with appropriate length because the standard mounting screws (M5 x 20) may be too long.
- If the protective height is 600 mm or more, use intermediate mounting brackets of specified quantities and locations according to the dimensions.
  If the brackets described above are not used, ratings and performance cannot be not met.

Mounting Procedure

1. Attach the top/bottom mounting brackets.

Place top/bottom mounting bracket (2) in the screw hole at the top/bottom of the F3SJ, and fasten it using the included screw (M5x20). Insert the bracket's protrusion into the groove on the case when attaching. Next, attach top/bottom mounting brackets (3) and (1) to top/bottom mounting bracket (2), and fasten them lightly using the included screws (M3x8).

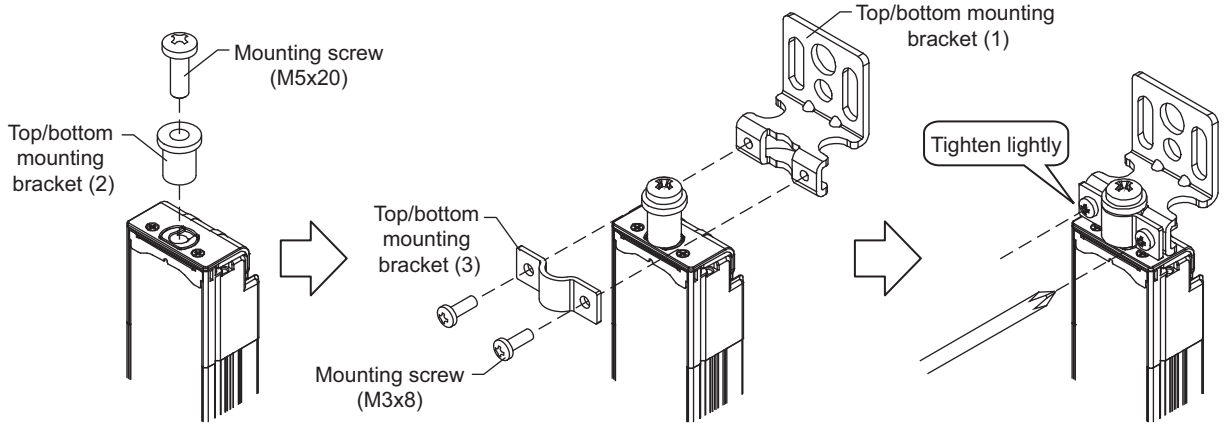

2. Attach the intermediate mounting brackets.

Insert intermediate brackets (2) and (3) into the grooves on the side of the case, and use the included mounting screws (M3x10) to lightly fasten the brackets so that they are able to slide up and down the case.

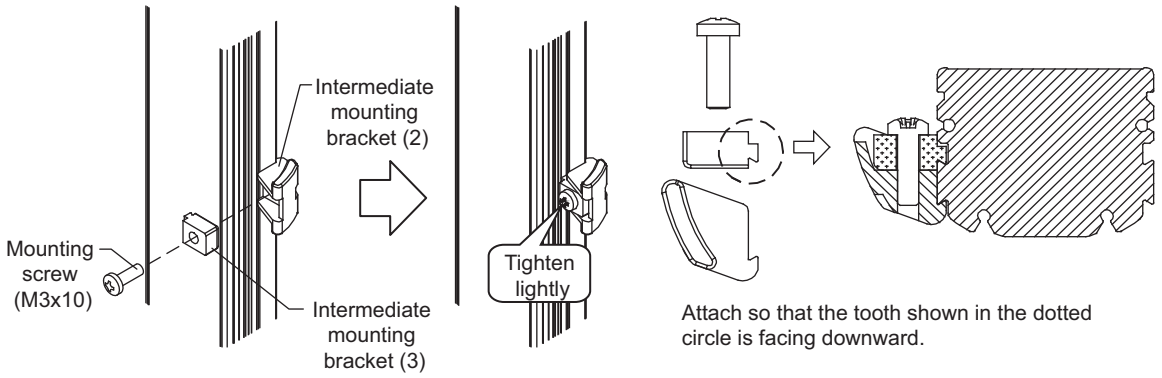

3. Attach the intermediate mounting brackets (for backside mounting).

For backside mounting, first lightly attach intermediate mounting bracket (1) to the equipment, wall surface, etc. Then, attach intermediate brackets (1) and (4) to the bracket that was lightly attached to the case in step 2 above, and lightly tighten them using the included mounting screws (M4x25).

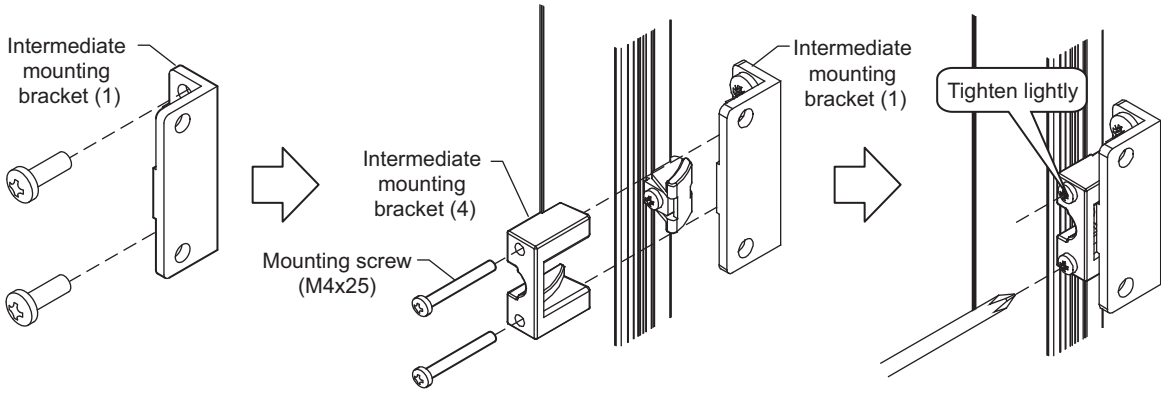

4. Attach the intermediate mounting brackets (for side mounting).

When performing side mounting, first attach the intermediate mounting bracket for side mounting to intermediate mounting bracket (1), using the included mounting screws (M5x10). Then, lightly attach intermediate mounting bracket (4) to the bracket that was lightly attached to the case in step 2 above, using the included mounting screws (M4x25).

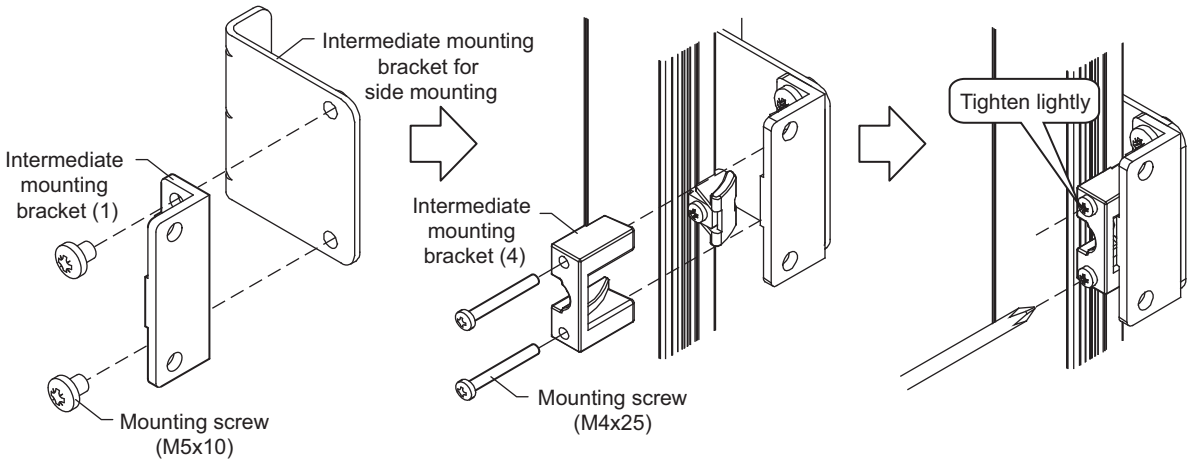

5. Fasten to equipment.

Attach top/bottom mounting bracket (1) to the equipment, wall surface, etc. If you are using an intermediate mounting bracket for side mounting, also attach the side-mounting intermediate bracket to the equipment, wall surface, etc. After the F3SJ is mounted, securely tighten the mounting screws (M3x10) that were lightly tightened in step 2 above.

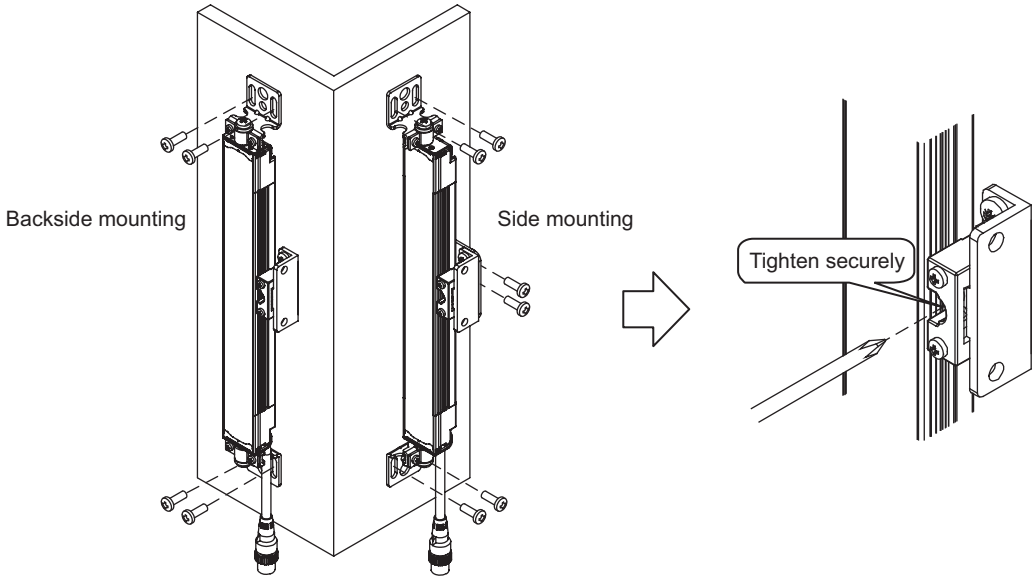

6. Adjust the beams.

Move the F3SJ from side to side to align it to a center position where the 5 lamps of the incident light level indicator are turned ON. After each screw is securely tightened after beam adjustment, make sure that the 5 lamps of the incident light level indicator are turned ON.

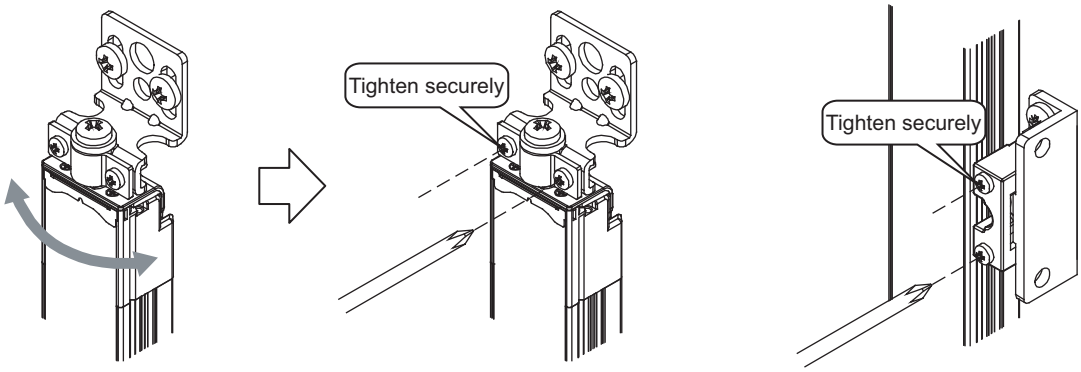

CHECK!

Do not fully tighten the screws one by one. Tighten all screws evenly.

Mounting is complete.For adjustment of beams and tightening torque, see "Adjustment Procedure" in the next page.

Adjustment Procedure

1. Check the following points:
   - The optical surface of the emitter and receiver should be clean.
   - There should be no interrupting object in the detection zone of the F3SJ.

2. Adjust the emitter's beams.
   Adjust the angle of the emitter while checking the incident light level indicator, and align the emitter so that it faces the center position where the incident light level indicator turns ON.

3. Adjust the receiver's beams.
   Adjust the angle of the receiver while checking the incident light level indicator, and align the receiver so that it faces the center position where the incident light level indicator turns ON.

4. Make sure that all 5 lamps of the incident light level indicator are turned ON.

5. While taking care not to change the adjustment status of the beams, tightly fasten all the bracket screws and mounting screws.
   The table below shows the tightening torques for the included screws.

Mounting bracket type	Nominal diameter x length of screw (mm)	Tightening torque
Top/bottom mounting brackets	M3x8	0.54N•m
	M5x20	2.3N•m
Intermediate mounting brackets	M3x10	0.54N•m
	M4x25	1.2N•m
	M5x10	2.3N•m

CHECK!
- If some of the 5 lamps of the incident light level indicator are not turned ON even when the receiver angle is adjusted, check whether or not the mounting surfaces of the emitter/receiver are parallel, and whether or not the mounting height of the emitter/receiver is appropriate.
- You must comply with specified tightening torque and screw sizes. Otherwise a failure may occur.

Wiring

Wiring Precautions

⚠ WARNING

Double or reinforced insulation from hazardous voltage must be applied to all input and output lines. Failure to do so may result in electric shock.

Connect the load between the output and 0V line. (PNPoutput)
Connecting between the output and +24V line is dangerous because the operation mode is reversed to "ON when blocked".

Do not short-circuit the output line to the +24V line.
Otherwise, the output is always ON. Also, the 0V of the power supply must be grounded so that output does not turn ON due to grounding of the output line.

Configure the system by using the optimal number of safety outputs that satisfy the requirements of the necessary safety category.

Do not connect each line of F3SJ to a DC power supply higher than 24V+20%. Also, do not connect to an AC power supply.
Failure to do so may result in electric shock.

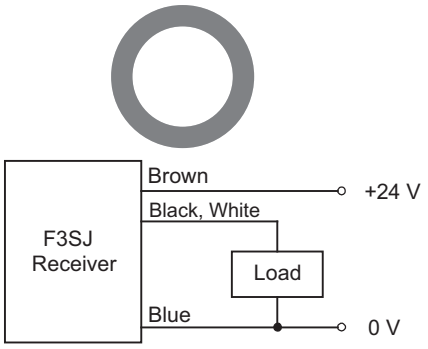

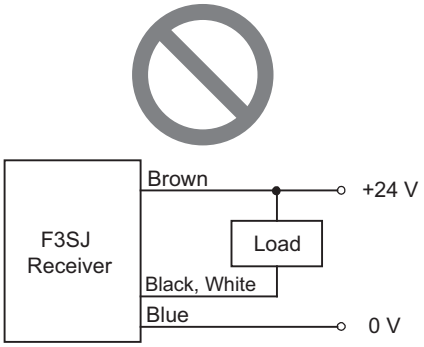

Power Supply Unit

⚠ WARNING

For the F3SJ to comply with IEC 61496-1 and UL 508, the DC power supply unit must satisfy all of the following conditions:

- Must be within the rated power voltage (24V DC ± 20%)
- Must have tolerance against the total rated current of devices if it is connected to multiple devices
- Must comply with EMC directives (industrial environment)
- Double or reinforced insulation must be applied between the primary and secondary circuits
- Automatic recovery of overcurrent protection characteristics (reversed L sagging)
- Output holding time must be 20ms or longer
- Must satisfy output characteristic requirements for class 2 circuit or limited voltage current circuit defined by UL508 (Refer to remarks)
- **Must comply with laws and regulations regarding EMC and electrical equipment safety of the country or region where the F3SJ is used (Ex: In EU the power supply must comply with the EMC Directive and the Low Voltage Directive.)**

(Remarks)

To prevent a fire, the secondary circuit of the power supply must satisfy either of the following conditions in accordance with UL 508:

- As with secondary winding of isolation transformer, there must be a limited current voltage circuit to which isolated power supply provides power, and the "current is limited to 8A max. (including short-circuit)" or "circuit protection such as a fuse is used to limit the current, which has a rating of 4.2A max." (24VDC power supply).
  Recommended power supply: OMRON S82K (15 W, 30 W, 50 W, 90 W type), S8VS (60 W type), S82J (10 W, 25 W, 50 W type)
  These products are approved by UL listing (UL508, class 2 power supply), CE marking compatible (EMC/Low Voltage Directive).
- Class 2 power supply unit complying with UL 1310, or a circuit using 2 transformers complying with UL 1585 as a power supply.

CHECK!

Sharing the power supply with other devices may cause the F3SJ to be affected by noise or voltage drop. It is recommended that this safety component use a dedicated power supply but do not share with other devices.

Wiring Procedure

1. Connect an emitter cable (F39-JD□□-L, grey, sold separately) to the emitter's connection cable (grey).

2. Connect a receiver cable (F39-JD□□-D, black, sold separately) to the receiver's connection cable (black).

3. Connect the 0V line of the power supply directly to the protective earth (PE).

CHECK!

To ensure proper wiring, check that the color of the cable matches the color of the connector's resin cover (emitter: grey, receiver: black). Failure to do so may result in damage to the F3SJ. Incorrect wiring can be prevented by matching the colors.

■ Cable with Connector on One End (F39-JD□A*, sold separately)

(Unit: mm)

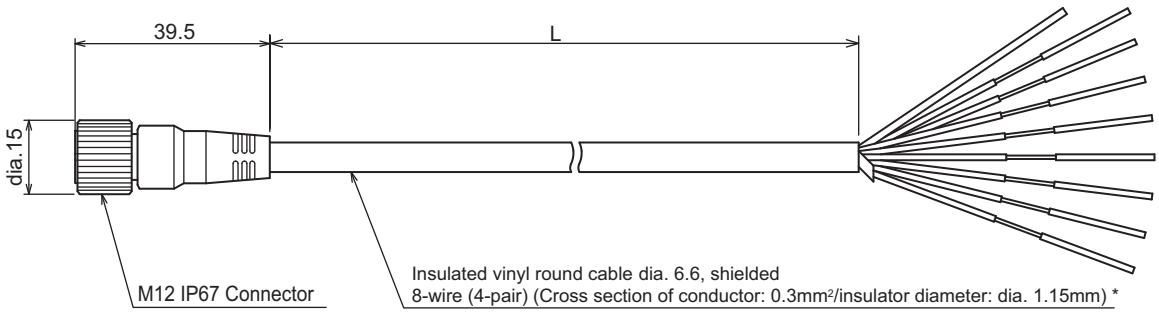

Set model name	For emitter		For receiver		L (mm) *
F39-JD3A	F39-JD3A-L	Grey cable	F39-JD3A-D	Black cable	3000
F39-JD7A	F39-JD7A-L		F39-JD7A-D		7000
F39-JD10A	F39-JD10A-L		F39-JD10A-D		10000
F39-JD15A	F39-JD15A-L		F39-JD15A-D		15000
F39-JD20A	F39-JD20A-L		F39-JD20A-D		20000

Internal wiring diagram (F39-JD□A-L, F39-JD□A-D)

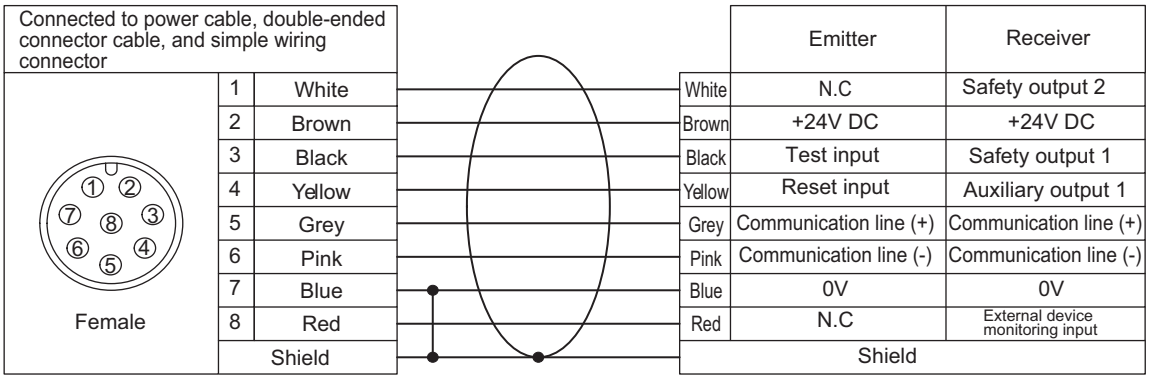

Twisted pair wires are white and red, brown and blue, black* and yellow, and grey and pink.

■ Series Connection Cable for Close Contact(F39-JJR□L, sold separately)

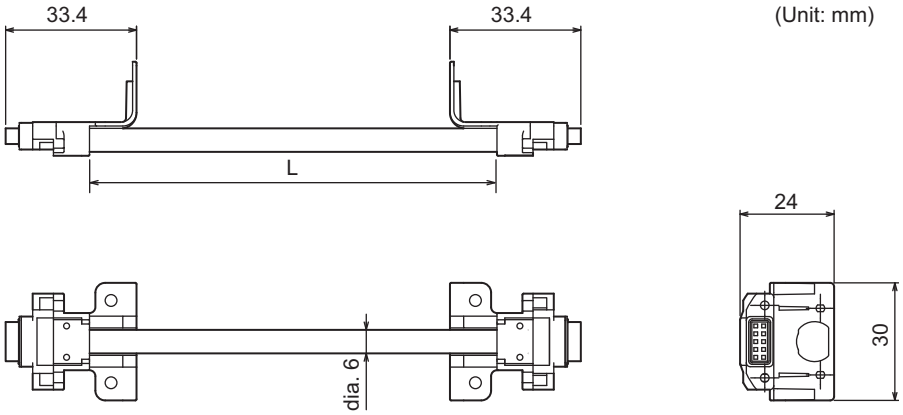

Set model name	For emitter		For receiver		L (mm)
F39-JJR06L	F39-JJR06L-L	Grey cable	F39-JJR06L-D	Black cable	60
F39-JJR15L	F39-JJR15L-L		F39-JJR15L-D		150

■ Series Connection Cable for Extension (F39-JJR3W, sold separately)

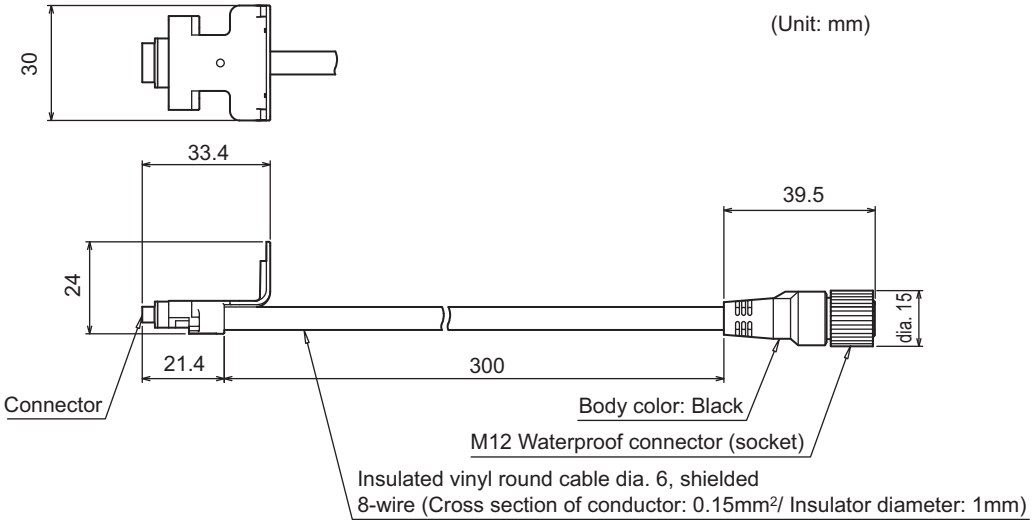

Set model name	For emitter		For receiver	
F39-JJR3W	F39-JJR3W-L	Grey cable	F39-JJR3W-D	Black cable

Connect a double-ended cable F39-JD□B in between. (The maximum length between series connections is 15m.)

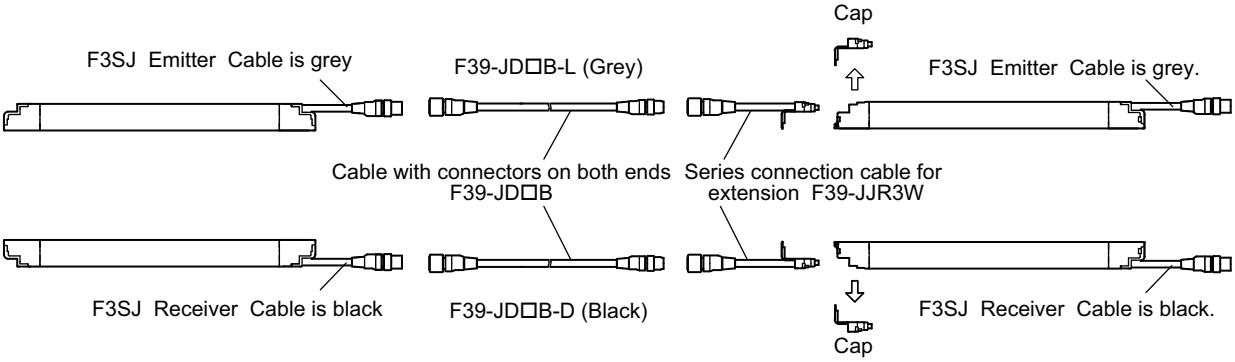

■ Connection Cable (F39-JJR3K, sold separately)

The connection cable is a standard included product. Purchase a replacement when damaged or lost.

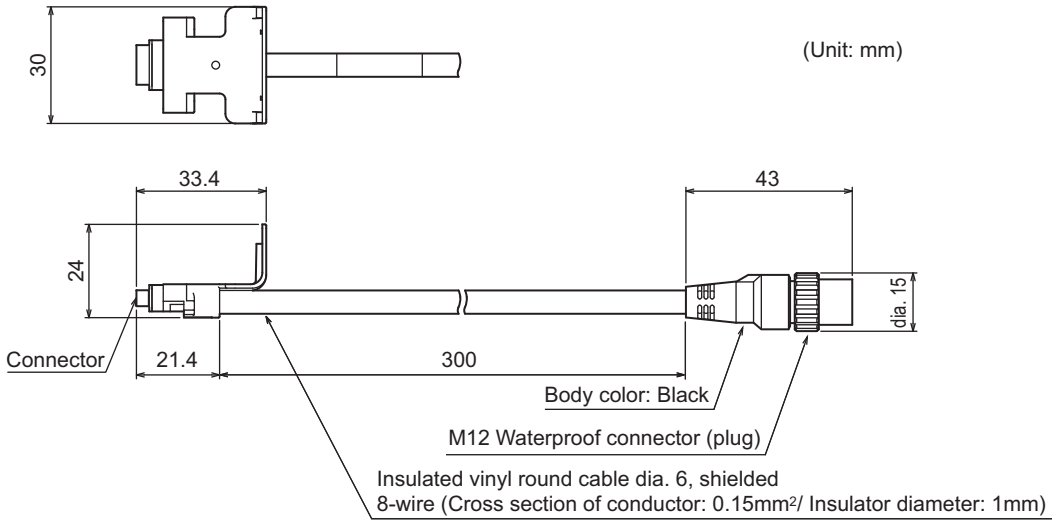

Set model name	For emitter		For receiver	
F39-JJR3K	F39-JJR3K-L	Grey cable	F39-JJR3K-D	Black cable

■ Cable with Connectors on Both Ends: Cable for Extension and for Connection to F3SP-B1P (F39-JD□B, sold separately)

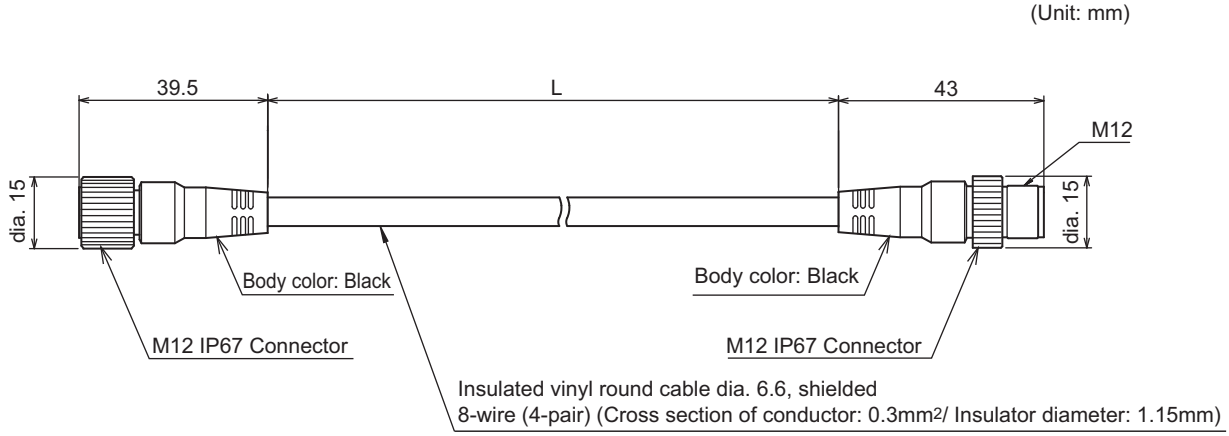

Set model name	For emitter		For receiver		L (mm)
F39-JDR5B	F39-JDR5B-L	Grey cable	F39-JDR5B-D	Black cable	500
F39-JD1B	F39-JD1B-L		F39-JD1B-D		1000
F39-JD3B	F39-JD3B-L		F39-JD3B-D		3000
F39-JD5B	F39-JD5B-L		F39-JD5B-D		5000
F39-JD7B	F39-JD7B-L		F39-JD7B-D		7000
F39-JD10B	F39-JD10B-L		F39-JD10B-D		10000
F39-JD15B	F39-JD15B-L		F39-JD15B-D		15000
F39-JD20B	F39-JD20B-L		F39-JD20B-D		20000

Internal wiring diagram (F39-JD□B-L, F39-JD□B-D)

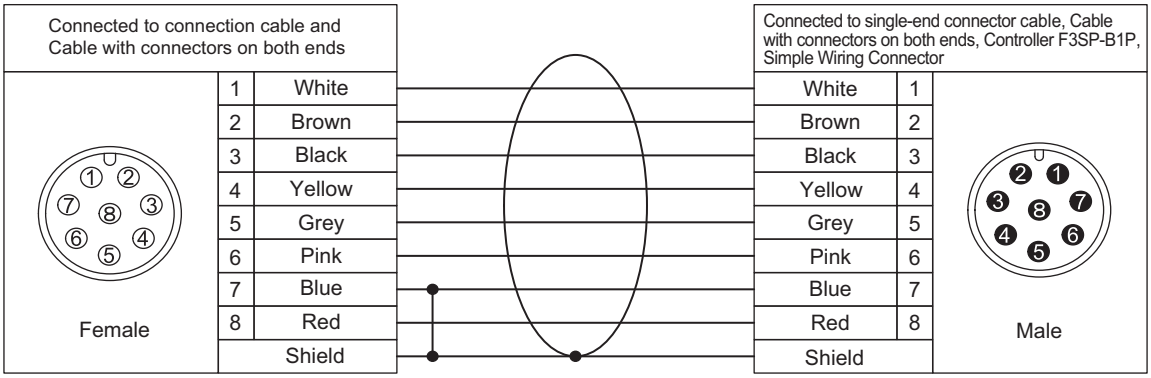

Twisted pair wires are white and red, brown and blue, black and yellow, and grey and pink

If the length of the F39-JD□A single-end connector cable is insufficient, use 1 or more F39-JD□B double-end connector cables to extend the length, as required.
Connection example

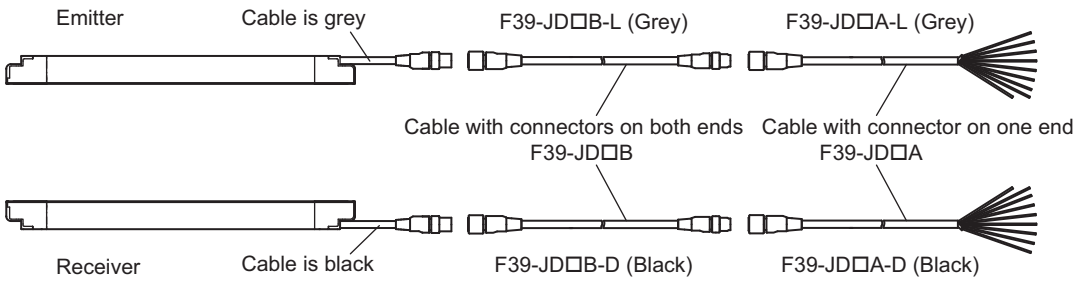

■ Cable with Connectors on Both Ends: Cable for Connection with G9SA-300-SC (F39-JC□C, sold separately)

(Unit: mm)

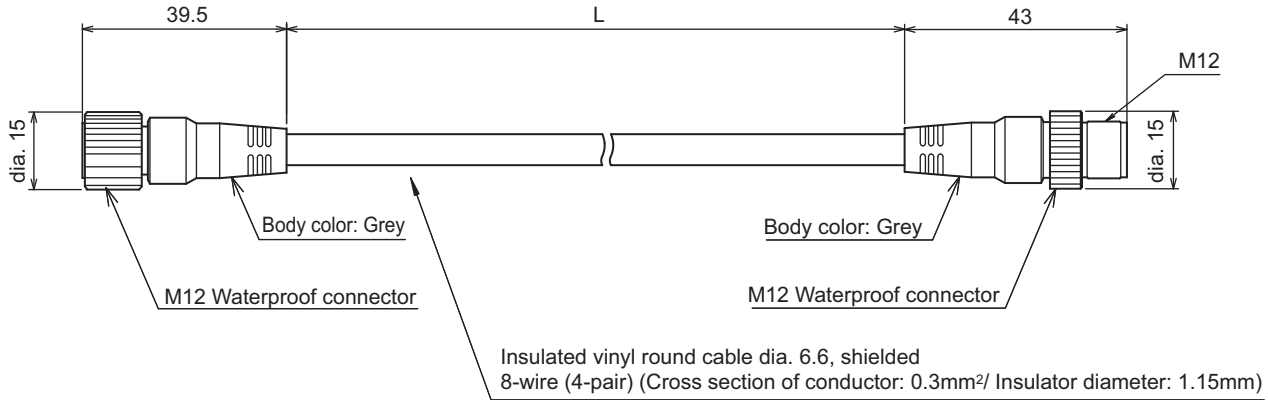

Set model name *1	For emitter		For receiver		L (mm)
F39-JCR2C	F39-JCR2C-L	Grey cable	F39-JCR2C-D	Black cable	200
F39-JC1C	F39-JC1C-L		F39-JC1C-D		1000
F39-JC3C	F39-JC3C-L		F39-JC3C-D		3000
F39-JC7C	F39-JC7C-L		F39-JC7C-D		7000
F39-JC10C	F39-JC10C-L		F39-JC10C-D		10000
F39-JC15C	F39-JC15C-L		F39-JC15C-D		15000

*1 Use only 1 set of F39-JC□C. If the cable length is insufficient, use F39-JD□B for extension so that F39-JC□C should be on the side of G9SA-300-SC.

Internal wiring diagram (F39-JC□C-L)

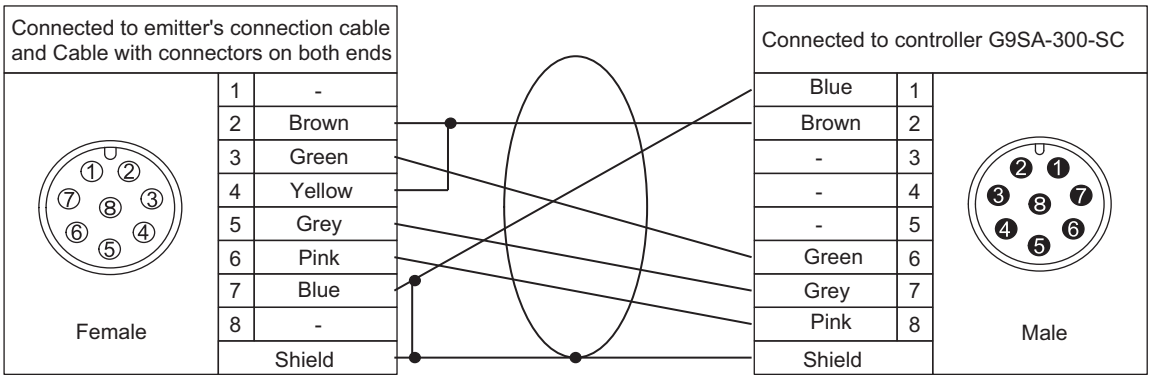

Internal wiring diagram (F39-JC□C-D)

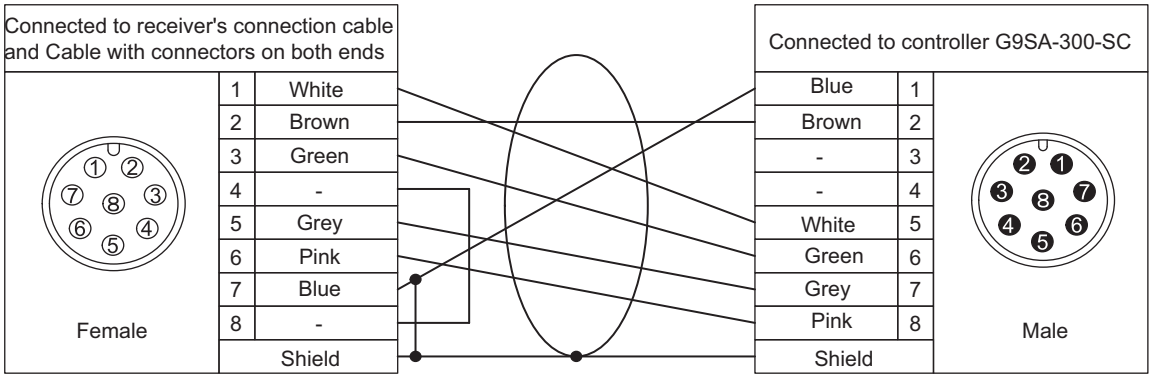

■ Simple Wiring Connector System

A combination of a double-ended cable for an emitter (F39-JD□B-L), a single-ended cable for a receiver (F39-JD□A-D), and a simple wiring connector (optional: F39-CN5) can be used for a reduced wiring system.

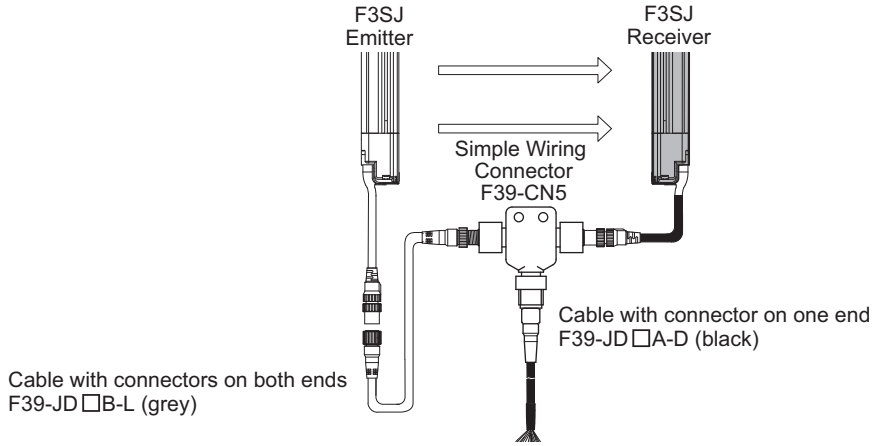

■ Cable for reduced wiring (optional: F39-JD□BA)

A set of two cables; a double-ended cable for an emitter (F39-JD□B) and a single-ended cable for a receiver (F39-JD□A-D). Used in combination with a simple wiring connector (optional: F39-CN5).
See the following page for details of a double-ended cable for an emitter (F39-JD□B-L) and a single-ended cable for a receiver (F39-JD□A-D).

Cable with connectors on both ends p.91

Cable with connector on one end p.89

■ Simple wiring connector (optional: F39-CN5)

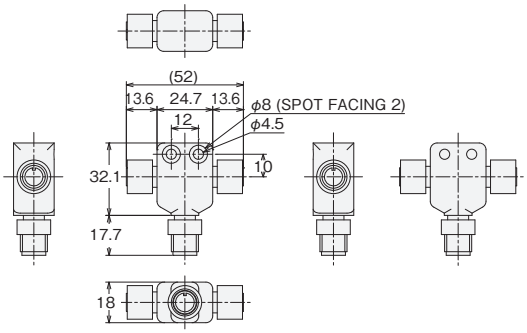

Internal Wiring Diagram (Optional: F39-CN5)

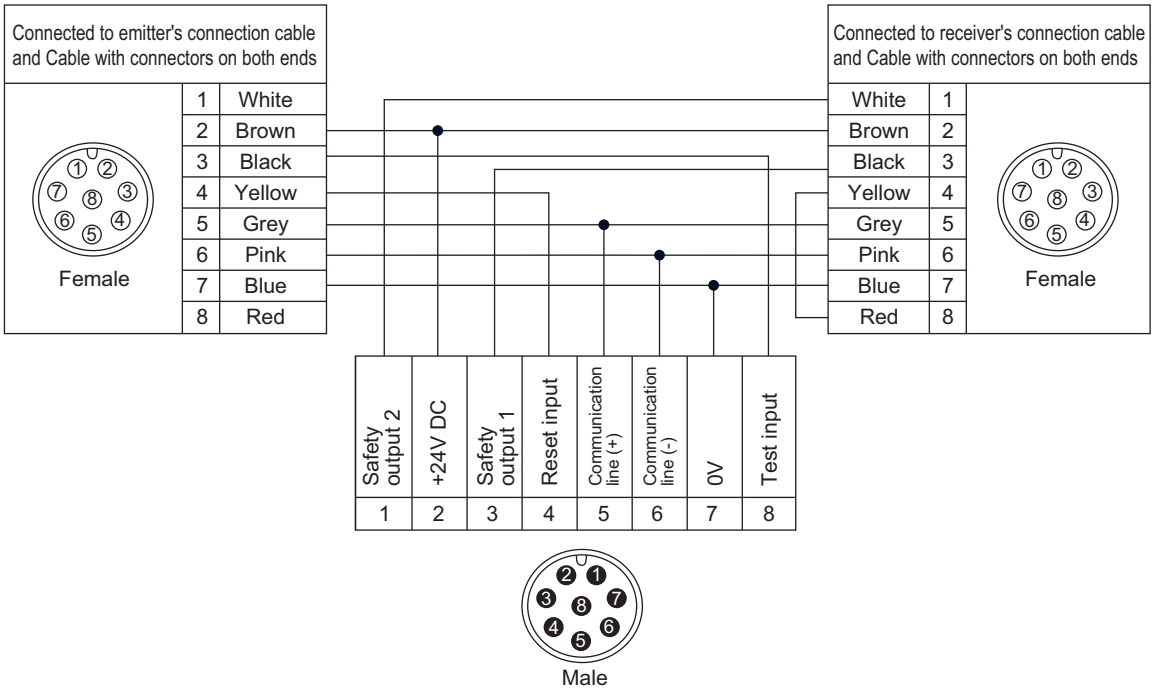

■ Universal indicator cable: A cable for connection with a commercial indicator (optional: F39-JJ3N)

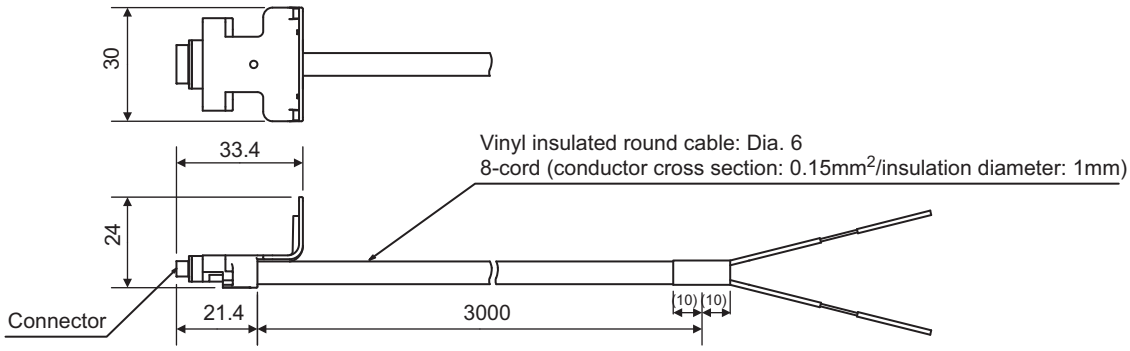

Chapter4 Input/Output Circuit and Applications

Input/Output Circuit	96
Wiring Examples	97
Using only F3SJ	97
Connecting 2 Muting Sensors	98
Connecting 4 Muting Sensors	99
Connecting to an F3SP-B1P	100
Connecting to an F3SX-E-L2R2	101
Connecting to a G9SA-301	102
Connecting to a G9SA-300-SC	103
Connecting to a G9SB-301-D	104
Connecting to a G9SX-AD322-T15	105
Using a simple wiring connector	106

Input/Output Circuit

The numbers in white circles indicate the connector's pin numbers.
The black circles indicate connectors for series connection.
The words in brackets [ ] indicate the signal name for muting system.

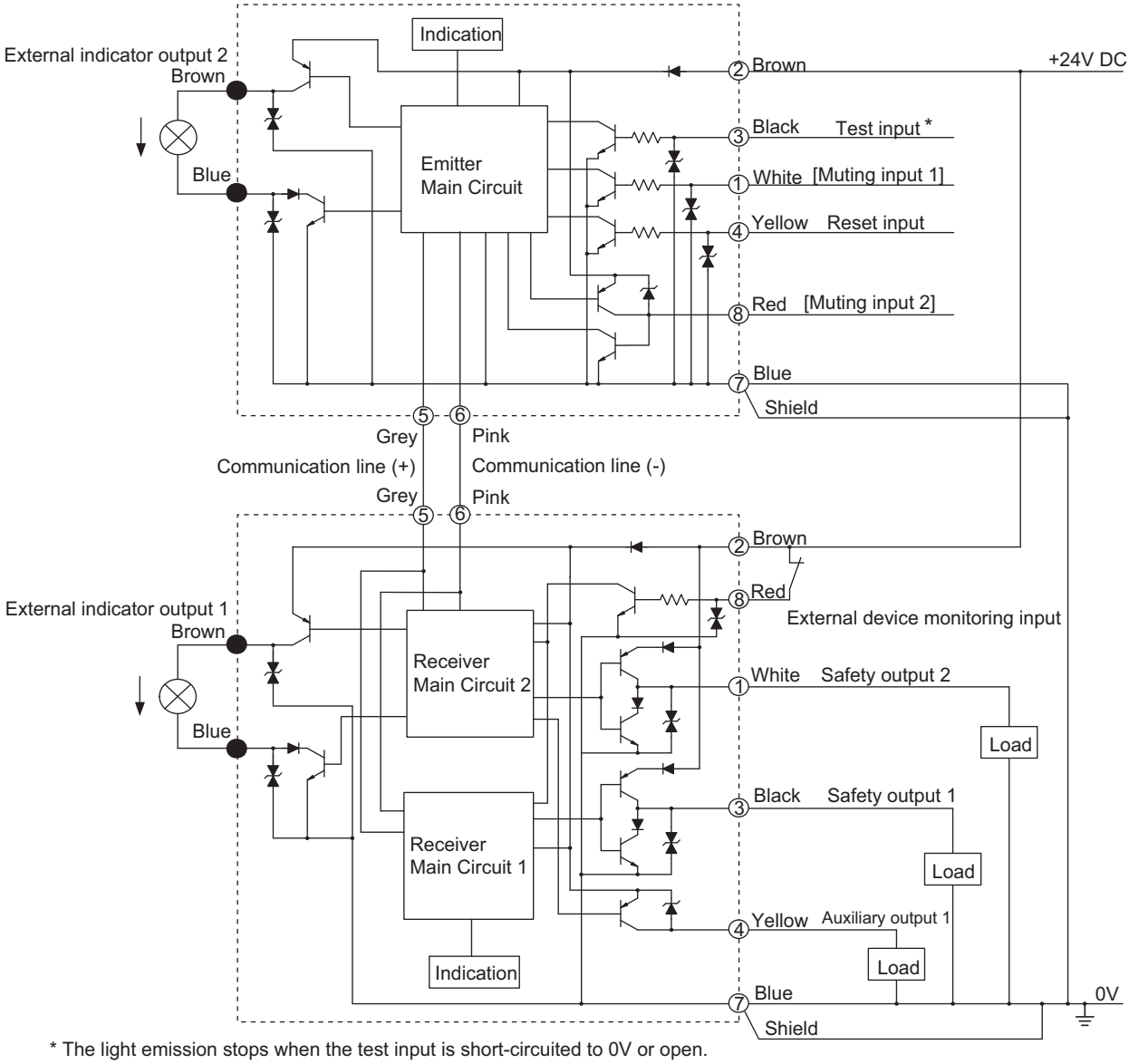

* The light emission stops when the test input is short-circuited to 0V or open.

For details about wiring, see the following sections.

When not using the muting function, see p.17

When using muting function, see p.28

Wiring Examples

Some examples of a motor control system using F3SJ are shown. The examples are equivalent to ISO 13849-1 (Category 4, PLe).

Using only F3SJ

•Use of relay contact welding detection and is possible without a controller or relay unit

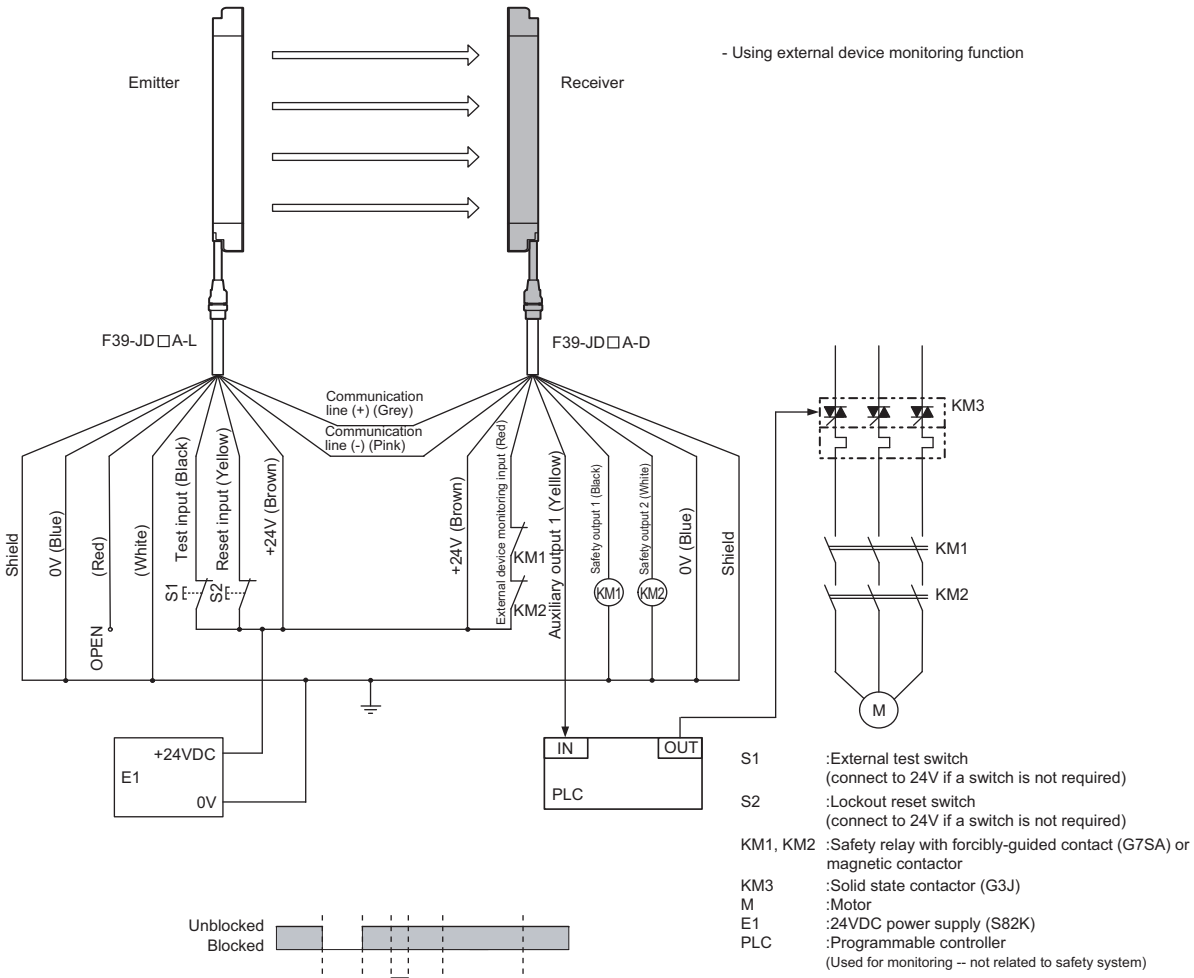

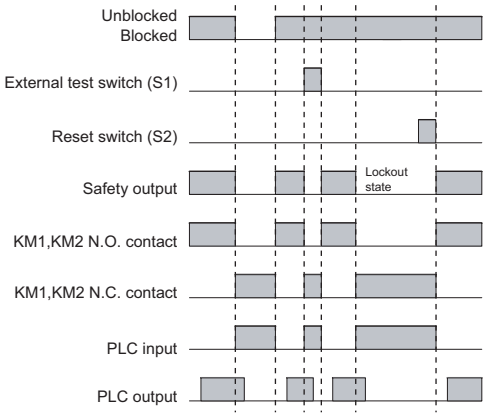

Wiring When External Device Monitoring Function Is Not Used p.18

Connecting 2 Muting Sensors

- Attaching a key cap for muting (F39-CN6) enables the muting function to be used

Attaching the key cap for muting (F39-CN6) p.25

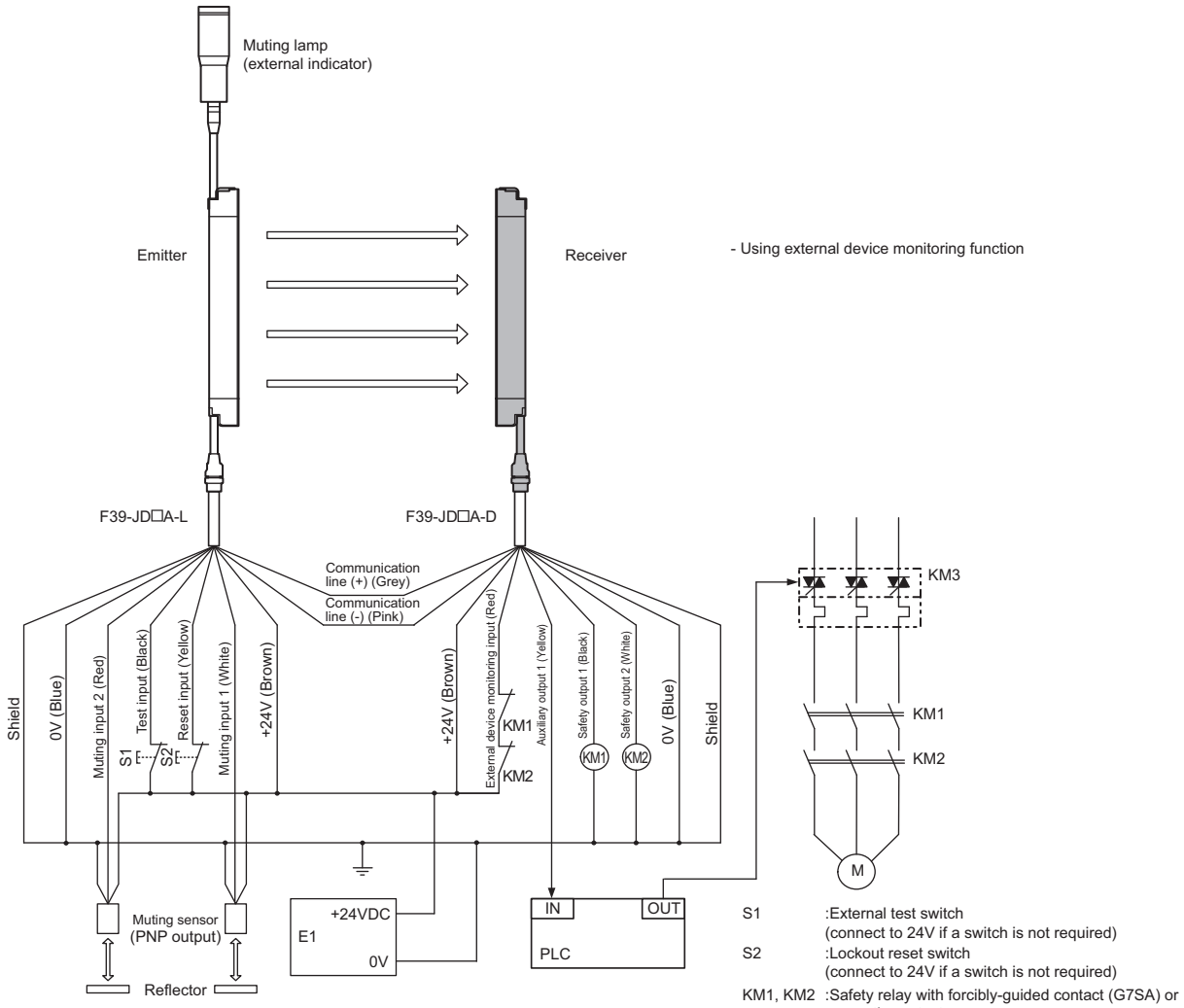

S1 :External test switch (connect to 24V if a switch is not required)
S2 :Lockout reset switch (connect to 24V if a switch is not required)
KM1, KM2 :Safety relay with forcibly-guided contact (G7SA) or magnetic contactor
KM3 :Solid state contactor (G3J)
M :Motor
E1 :24VDC power supply (S82K)
PLC :Programmable controller (Used for monitoring -- not related to safety system)

Muting sensor: Retro-reflective photoelectric sensor (E3Z-R81)

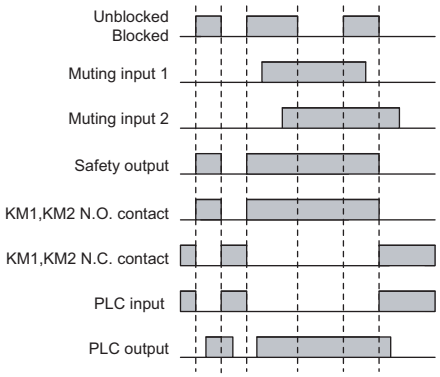

Wiring When External Device Monitoring Function Is Not Required p.28

Connecting 4 Muting Sensors

- Attaching a key cap for muting (F39-CN6) enables the muting function to be used

Attaching the key cap for muting (F39-CN6) p.25

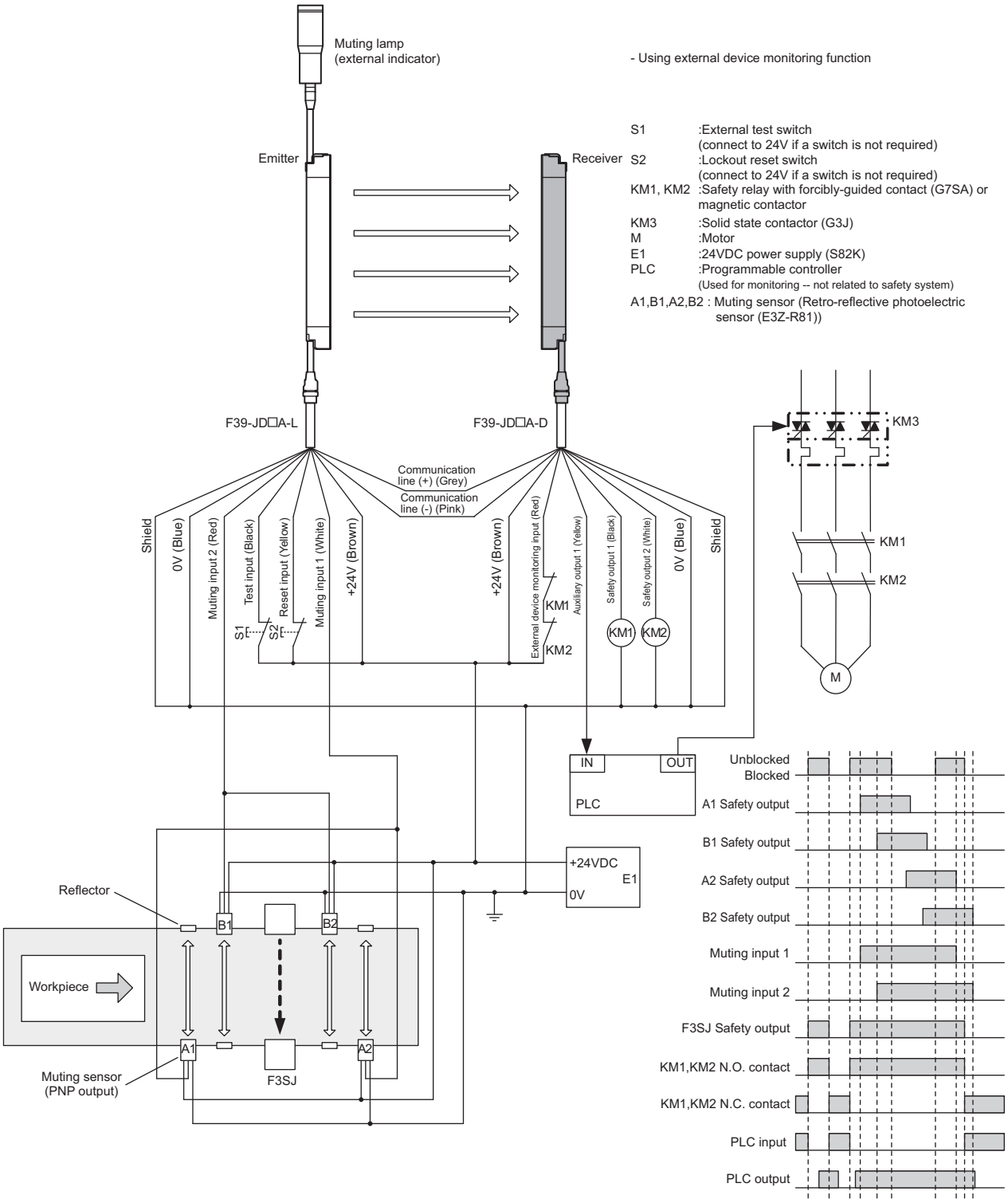

Wiring When External Device Monitoring Function Is Not Required p.28

Connecting to an F3SP-B1P

•Reduced wiring due to connector connection
•Safety relay included

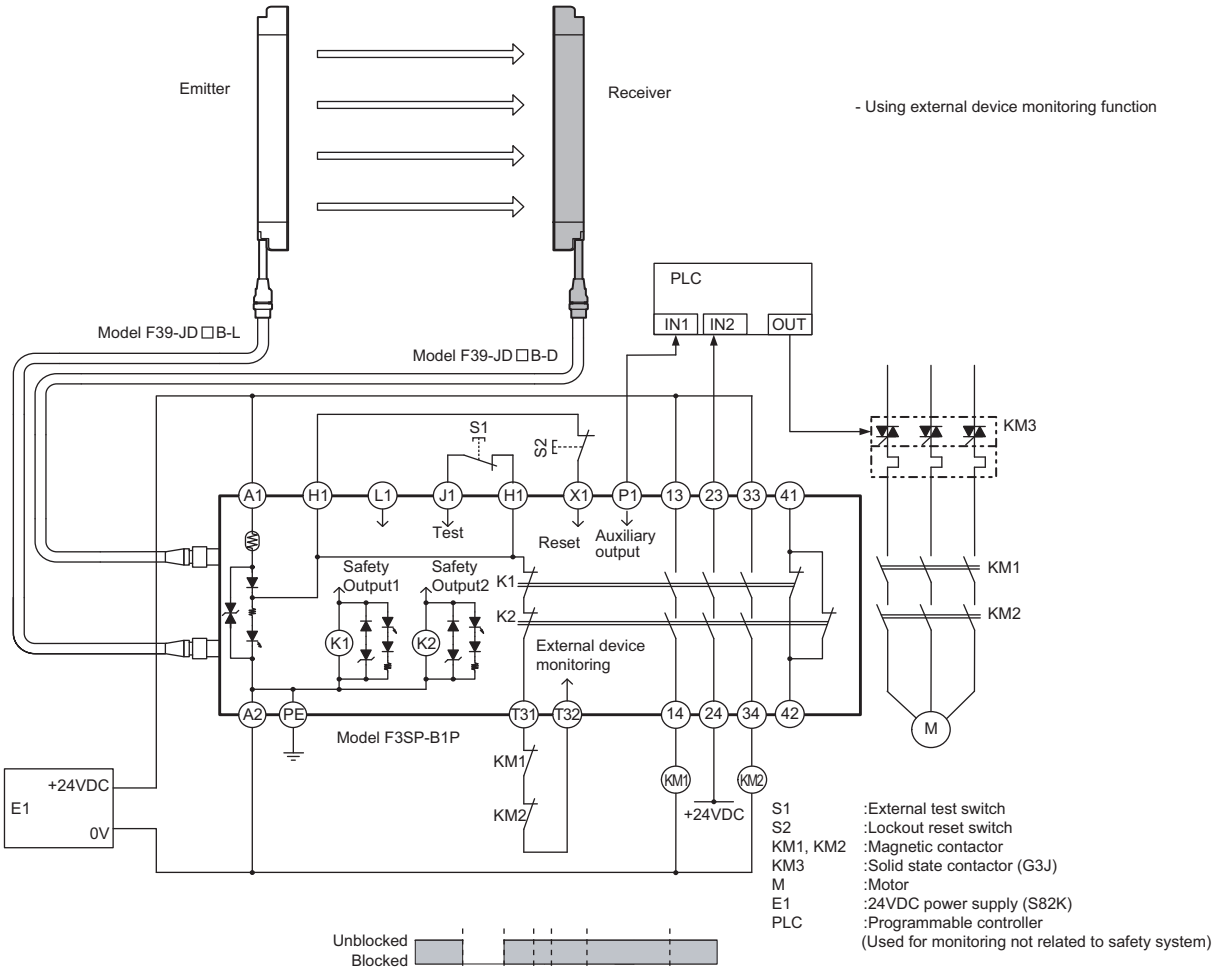

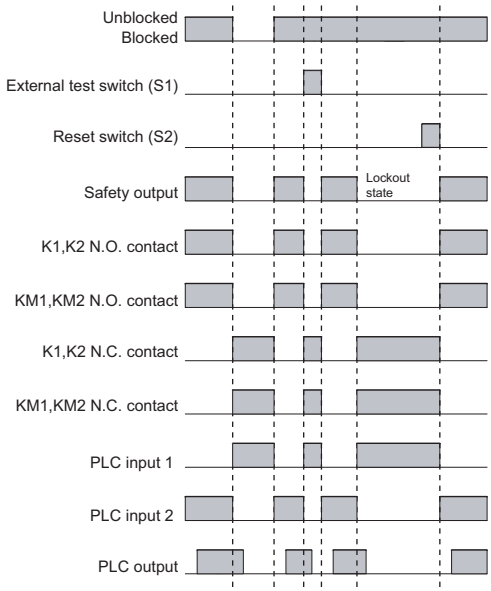

Wiring when not using external device monitoring function

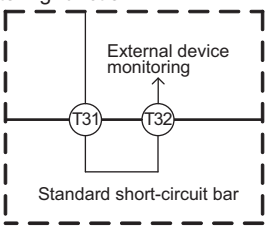

It cannot be used as a muting system when F3SP-B1P is used.

Muting System p.24

Connecting to an F3SX-E-L2R2

- Emergency stop switch can be connected
- Door switch, two hand control, single beam, or relay unit can be used in combination with F3SX
- Various settings can be changed and input/output terminals can be monitored using the setting support software for F3SX

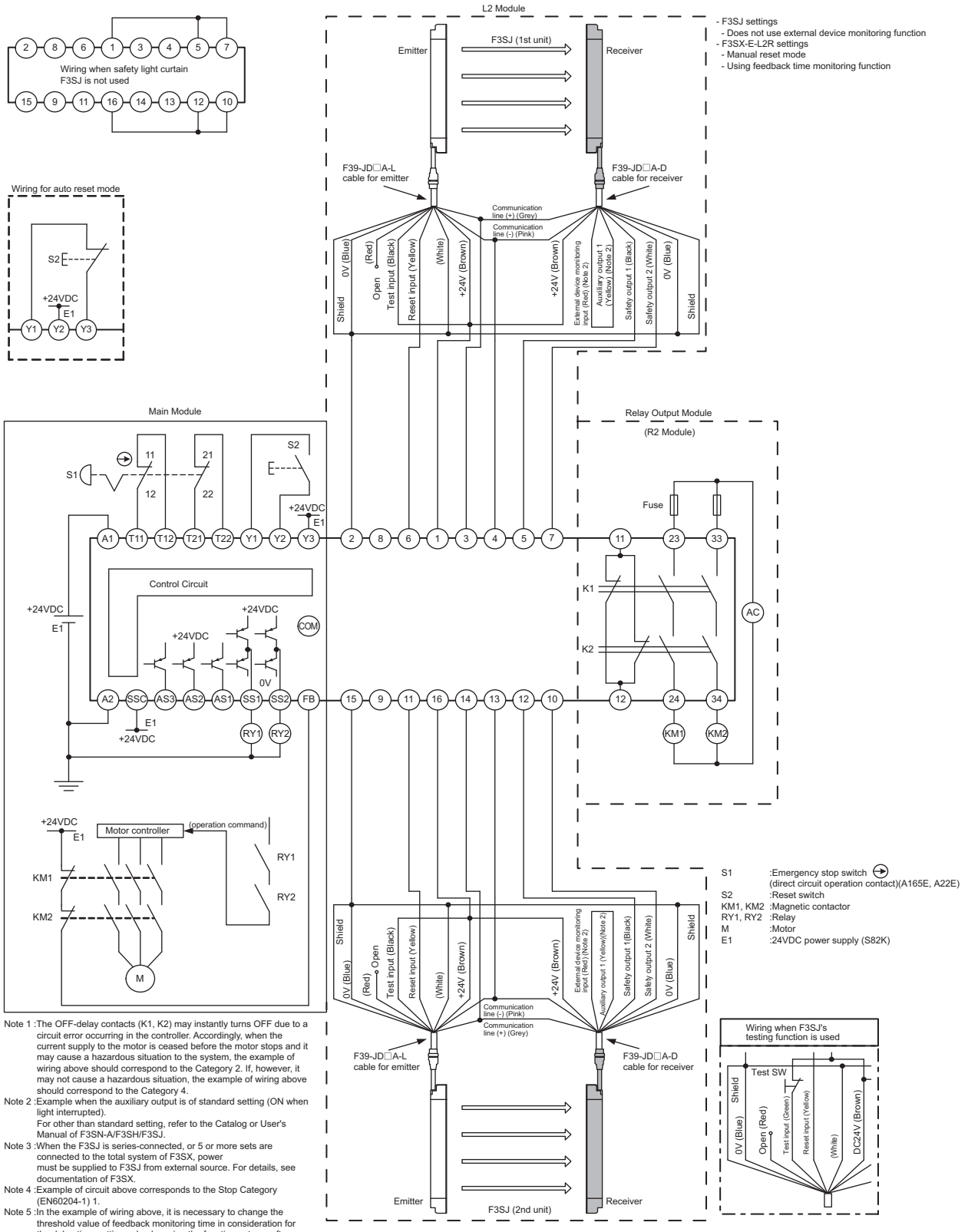

Note 1 :The OFF-delay contacts (K1, K2) may instantly turns OFF due to a circuit error occurring in the controller. Accordingly, when the current supply to the motor is ceased before the motor stops and it may cause a hazardous situation to the system, the example of wiring above should correspond to the Category 2. If, however, it may not cause a hazardous situation, the example of wiring above should correspond to the Category 4.

Note 2 :Example when the auxiliary output is of standard setting (ON when light interrupted).
For other than standard setting, refer to the Catalog or User's Manual of F3SN-A/F3SH/F3SJ.

Note 3 :When the F3SJ is series-connected, or 5 or more sets are connected to the total system of F3SX, power must be supplied to F3SJ from external source. For details, see documentation of F3SX.

Note 4 :Example of circuit above corresponds to the Stop Category (EN60204-1) 1.

Note 5 :In the example of wiring above, it is necessary to change the threshold value of feedback monitoring time in consideration for the delay time setting value by using the function set-up software for model F3SX (Model F3SX-CD□□□, sold separately).

Connecting to a G9SA-301

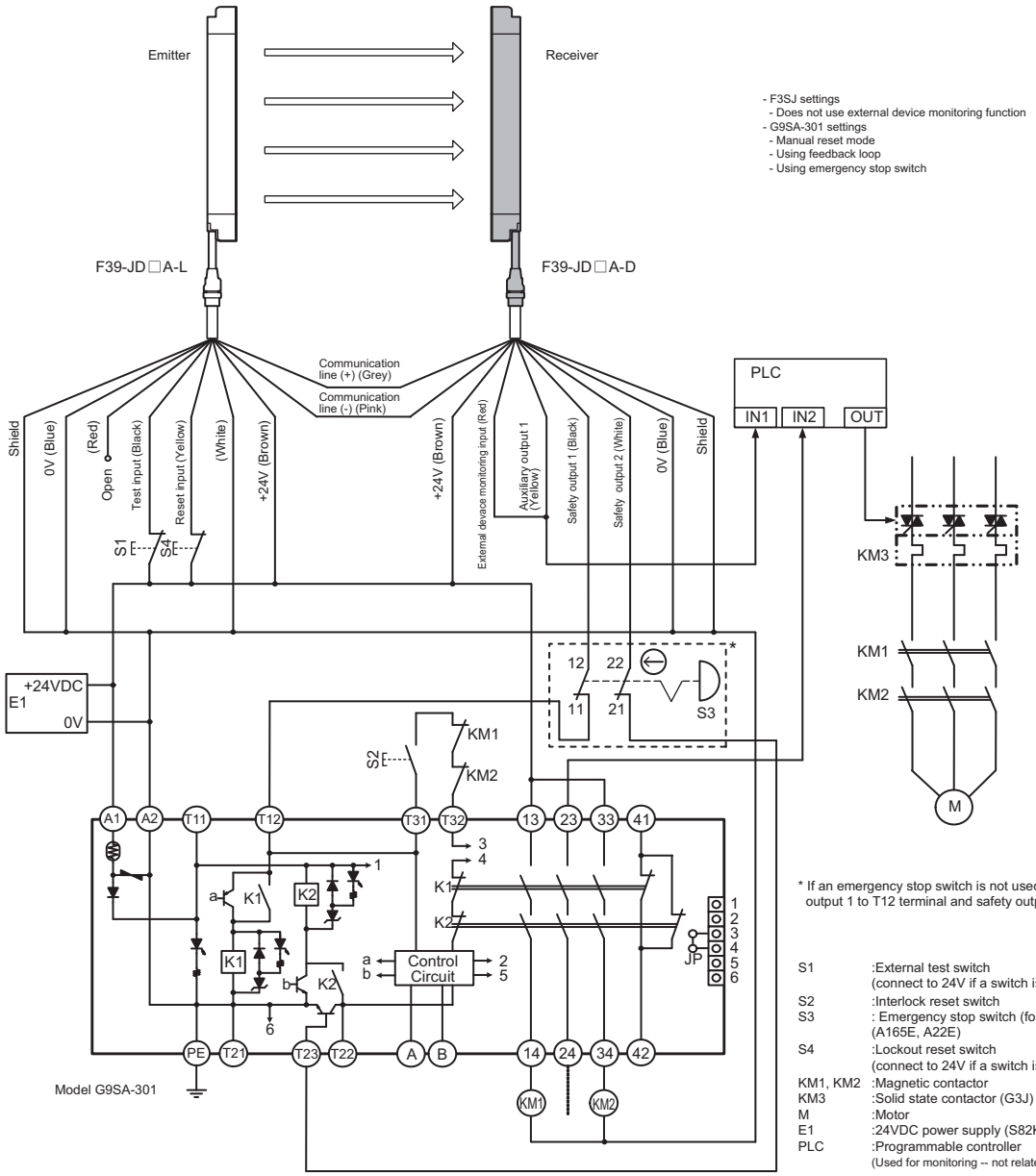

* If an emergency stop switch is not used, connect safety output 1 to T12 terminal and safety output 2 to T23 directly.

S1	:External test switch (connect to 24V if a switch is not required)
S2	:Interlock reset switch
S3	: Emergency stop switch (forcibly-opening contact) (A165E, A22E)
S4	:Lockout reset switch (connect to 24V if a switch is not required)
KM1, KM2	:Magnetic contactor
KM3	:Solid state contactor (G3J)
M	:Motor
E1	:24VDC power supply (S82K)
PLC	:Programmable controller (Used for monitoring -- not related to safety system)

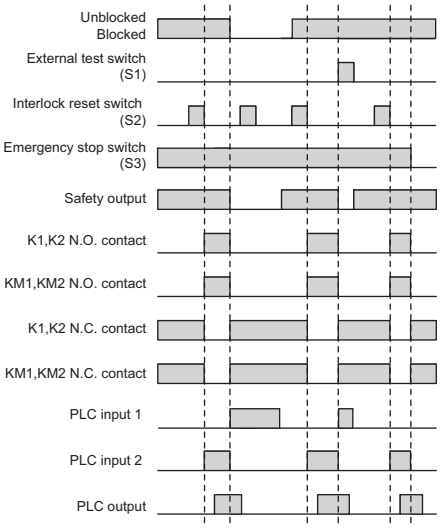

Wiring for auto reset mode

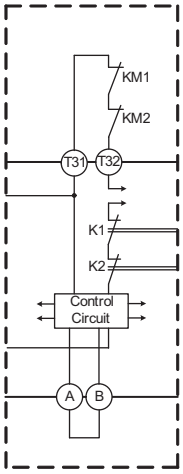

Connecting to a G9SA-300-SC

•Reduced wiring due to connector connection

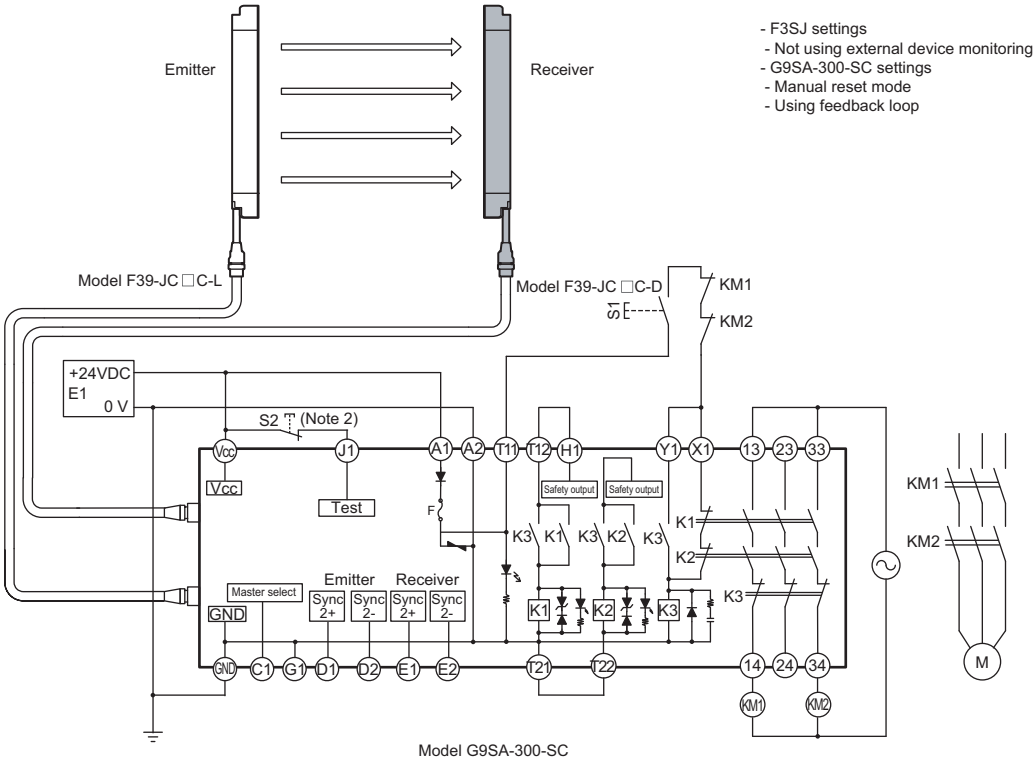

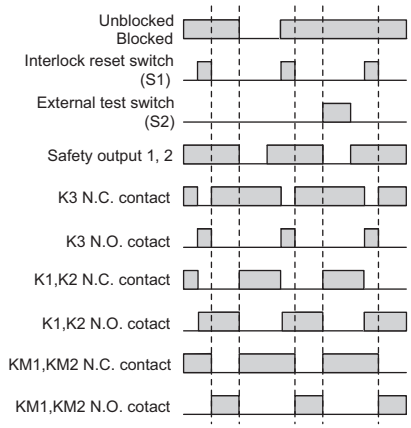

Note 1) F3SJ's external device monitoring and auxiliary output cannot be used.
Note 2) S2 performs normal operation when short-circuited and external test when opened.
Note 3) Do not connect any cable to terminals C1, D1, D2, E1, and E2

S1	:Interlock reset switch
S2	:External test switch (open between Vcc and J1 if a switch is not required)
KM1, KM2	:Magnetic contactor
M	:Motor
E1	:24V DC power supply (S82K)

Wiring for auto reset mode

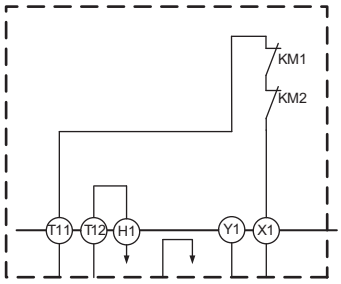

Connecting to a G9SB-301-D

•Thin (22.5mm thick)

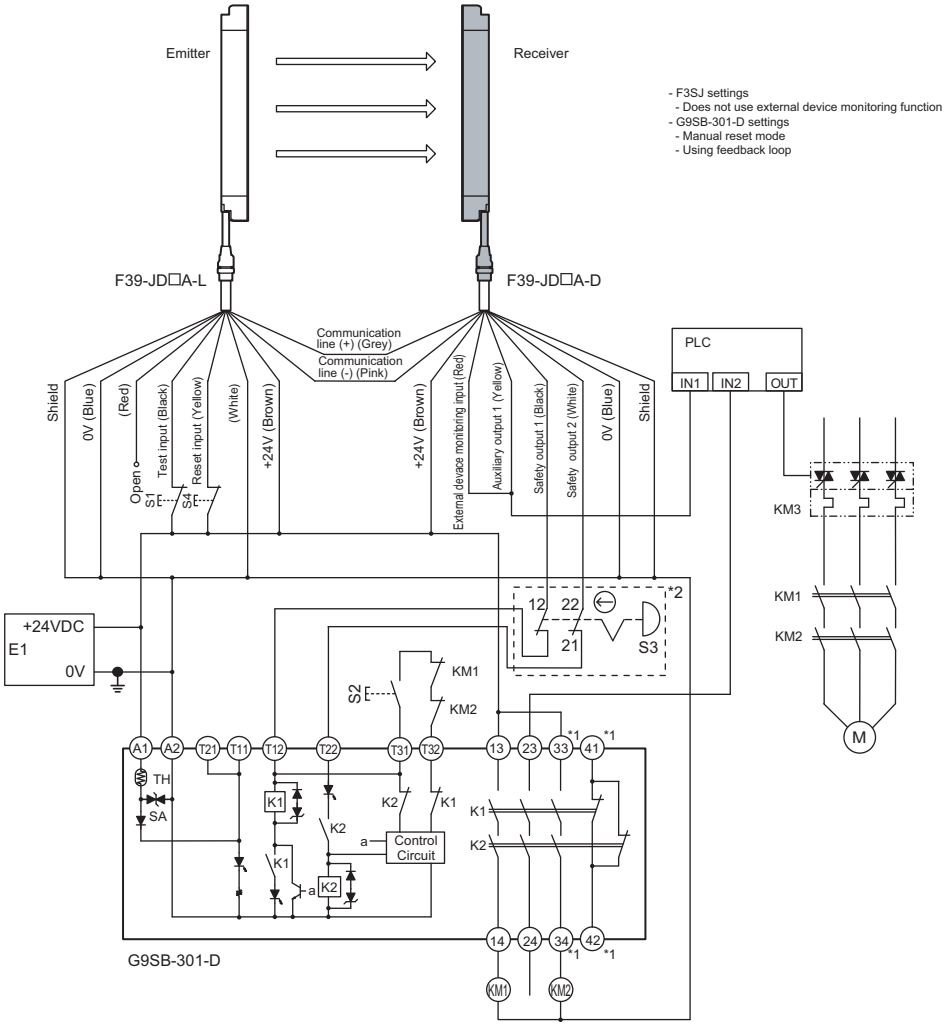

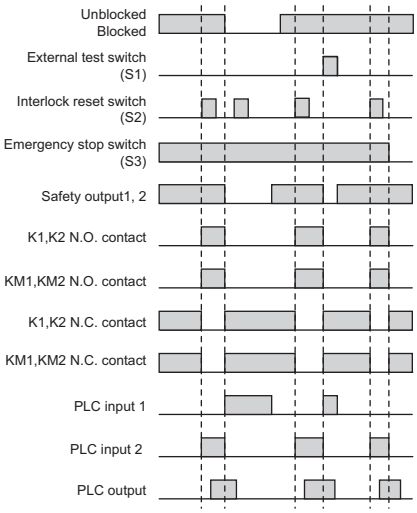

*1 The G9SB-200-D (17.5 mm thick), with no 33-34 and 41-42, is also available.
*2 If an emergency stop switch is not used, connect safety output 1 to T12 terminal and safety output 2 to T22 directly.

S1	:External test switch(connect to 24V if a switch is not required)
S2	:Interlock reset switch
S3	: Emergency stop switch (forcibly-opening contact) (A165E, A22E)
S4	:Lockout reset switch(connect to 24V if a switch is not required)
KM1, KM2	:Magnetic contactor
KM3	:Solid state contactor (G3J)
M	:Motor
E1	:24VDC power supply (S82K)
PLC	:Programmable controller (Used for monitoring -- not related to safety system)

CHECK!

Use G9SB-301-B for 3a+1b contact auto reset type.
Use G9SB-200-D for 2a contact manual reset type, or G9SB-200-B for 2a contact auto reset type. For details, see the catalogs.

Connecting to a G9SX-AD322-T15

•Can be configured for partial control and total control
•Can be extended to connect a door switch or a relay unit

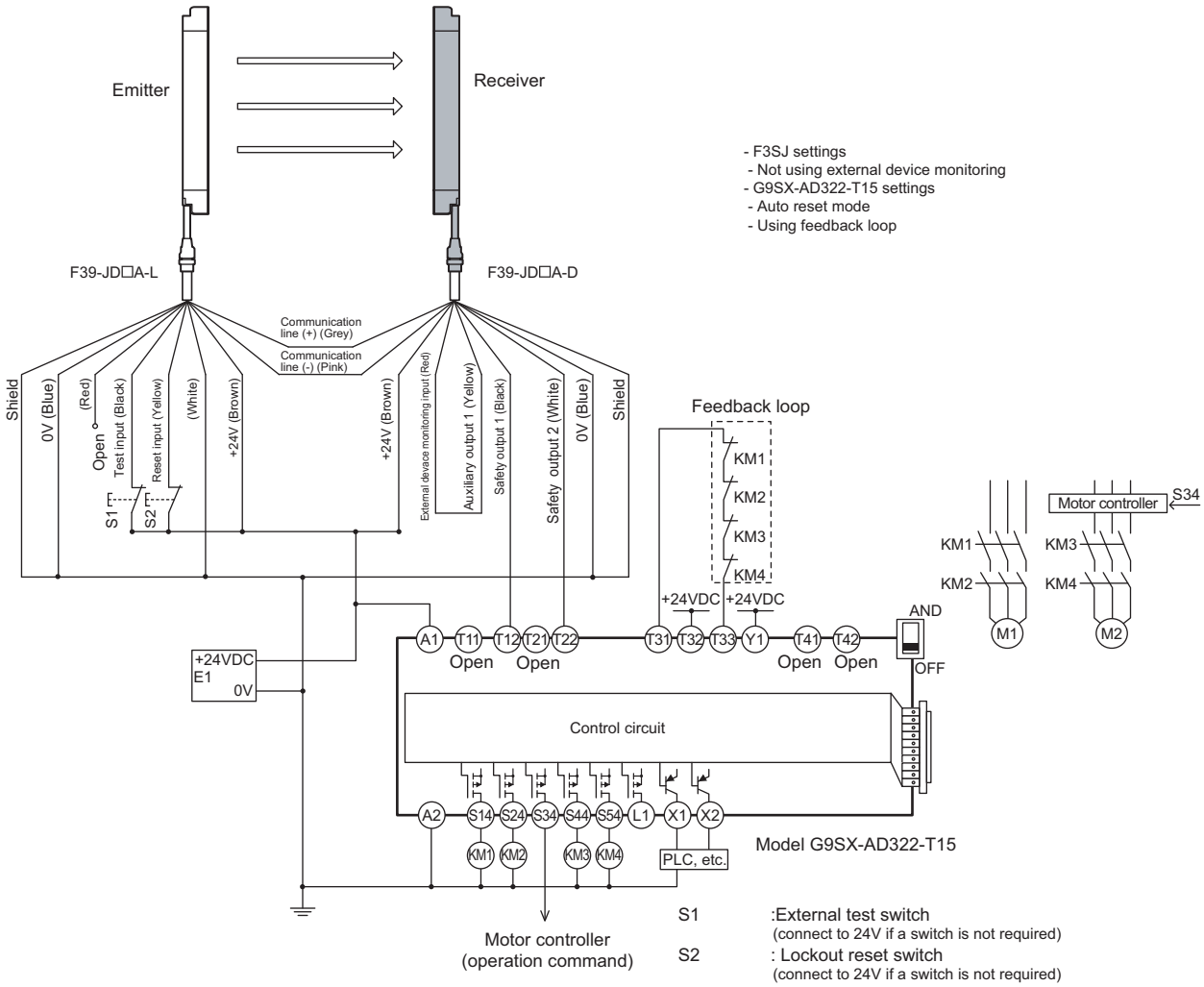

S1 :External test switch
(connect to 24V if a switch is not required)
S2 : Lockout reset switch
(connect to 24V if a switch is not required)
KM1~KM4 :Magnetic contactor
M1, M2 : Motor
E1 :24VDC power supply (S82K)
PLC :Programmable controller
(Used for monitoring -- not related to safety system)

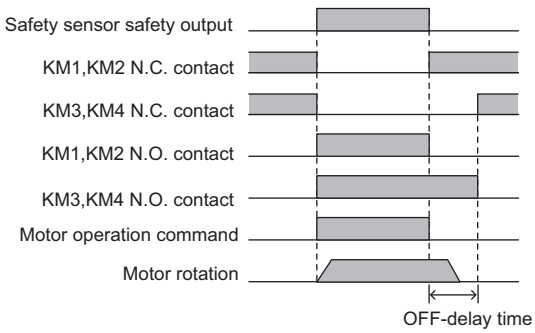

Wiring for manual reset mode

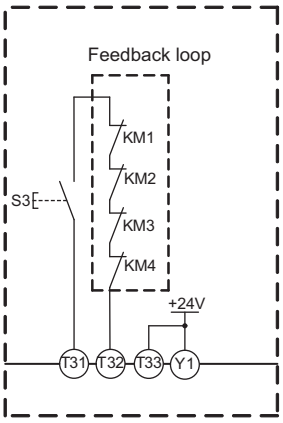

S3 : Reset switch

Using a simple wiring connector

•A combination of a cable for reduced wiring (F39-JD□BA) and a simple wiring connector (F39-CN5) can be used for a reduced wiring system.

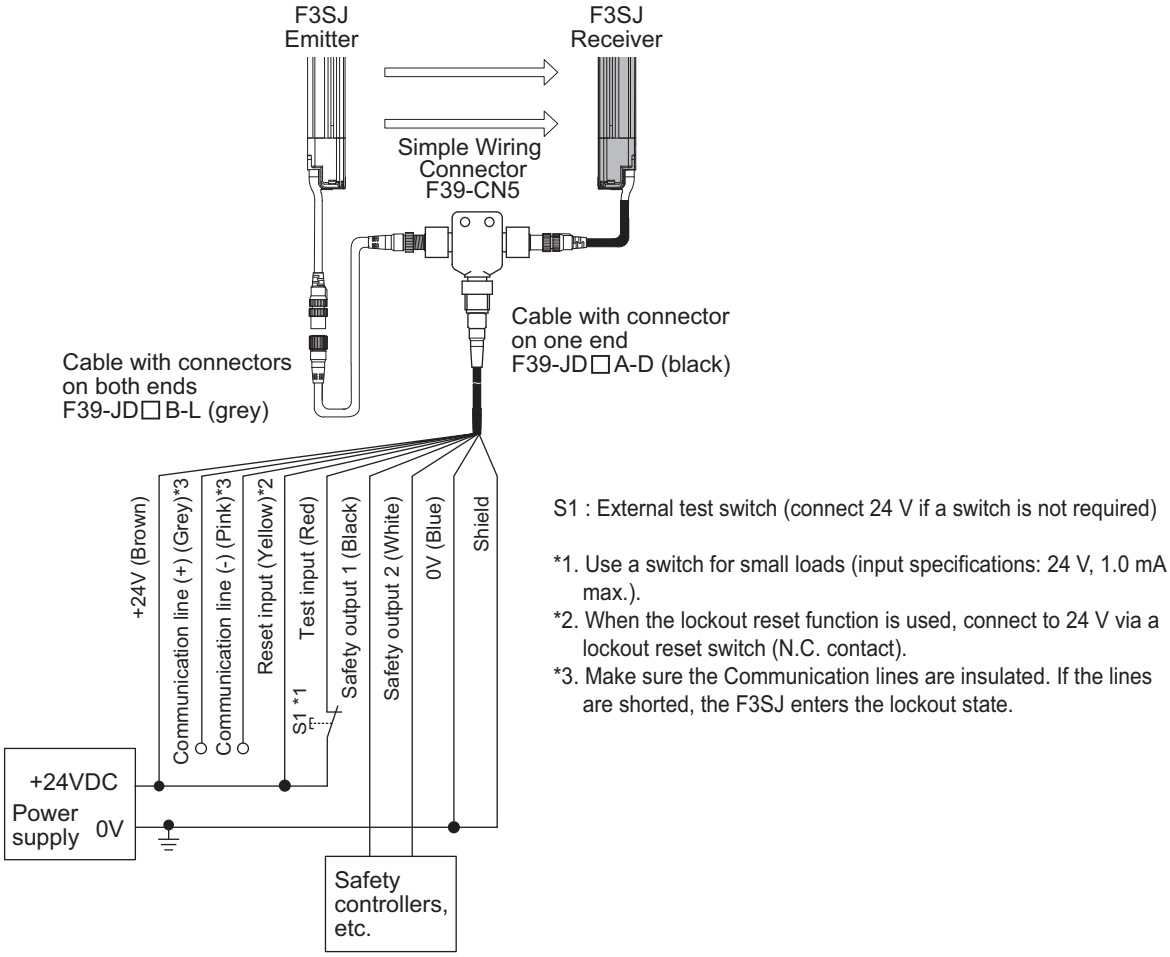

Note1: When using the Simple Wiring Connector (F39-CN5), the following functions are not available.
- External Device Monitoring
- Auxiliary Output 1
- Muting/Override

Note2: F39-JD□B-L is connected to the emitter by the above picture, but even if F39-JD□B-L is connected to the receiver, F3SJ operates.

An example of a control unit connectable to F3SJ

Safety Controller	Model
Safety Network Controller	NE1A Series
Safety Controller	G9SP Series
Flexible Safety Unit	G9SX
Safety Guard Switching Unit	G9SX-GS
Safety Relay Unit	G9SA Series/ G9SB Series
Control Unit	F3SP-B1P

Chapter5 Checklists

Pre-Operation Checklists	108
Maintenance Checklists	110

Pre-Operation Checklists

⚠ WARNING

Make sure to test the operation of the F3SJ after installation to verify that the F3SJ operates as intended. Make sure to stop the machine until the test is complete. Unintended function settings may cause a person to go undetected, resulting in serious injury.

After installation, the highest level administrator must use the following checklist to verify the operation, placing a check mark in each of the boxes.

Checklists

■ Installation Condition Check

☐The machine itself does not prevent the operation of safety functions such as stopping.
☐The hazardous part of a machine cannot be reached without passing through the detection zone of the F3SJ.
☐The system is configured so that the F3SJ can always detect a worker who is working in the hazardous zone.
☐The interlock reset switch is installed in a location that provides a clear view of the entire hazardous zone and it cannot be activated from within the hazardous zone.
☐Safety distance has been calculated. Calculated distance: S = ( )mm
☐The actual distance is equal to or greater than the calculated distance. Actual distance = ( )mm
☐Reflective surfaces are not installed in prohibited zones.
☐Not installed in a reflective configuration.
☐When muting function is used, a muting sensor must be installed so that muting state should not occur when a human body enters a detection zone of F3SJ by mistake.
☐When muting function is used, a muting sensor must be installed so that muting state should not occur when a human body enters a hazardous zone of a machine.
☐When muting function is used, muting state can be checked from where a worker operates or adjust the machine.
☐A muting sensor consists of 2 independent devices.
☐It is not used in flammable or explosive atmosphere.

■ Wiring Check Before Power Is Turned ON

☐When the power supply unit is connected to multiple devices, the power supply unit must have tolerance against total rated current of the devices.
☐The power supply unit is a 24 VDC unit that conforms to the EMC Directive, Low-voltage Directive, and output holding specifications.
☐The power supply polarity is not connected in reverse.
☐Emitter/receiver cables are properly connected to the respective emitters/receivers.
☐Double insulation is used between I/O lines and the hazard potential (commercial power supplies, etc.).
☐Outputs are not short-circuited to +24V line.
☐Loads are not connected to the +24V line.
☐All lines are not connected to commercial power source.
☐F3SJ's power supply connector and series connection connector must not be attached upside down.
☐Model of emitter and receiver must be the same.
☐When 2 or more sets of F3SJ are used, series connection is made or mutual interference prevention measures are taken.
☐When 2 or more sets of F3SJs are used in series connection, PNP output type and NPN output type must not be connected.

☐A secondary sensor farthest from its power supply has either of the followings:
- Cap
- Key cap for muting
- Muting lamp (set of lamp and cable)

☐Neither connector, cap, or bracket must be loose.
☐Auxiliary outputs 1, and external indicator outputs 1 and 2 must not be used as safety output.
☐Power supply's 0V must be grounded.
☐Wiring must not be bent, cracked, nor damaged.

■ Operation Check While the Machine Is Stopped

☐The test rod is not deformed.
Depending on the unit's model, detection capability may vary. Use a test rod with an appropriate diameter for inspection.

☐The sensor can detect a test rod wherever it is in the detection zone. In other words, when a test rod is inserted into the detection zone, all 5 incident light level indicators turn OFF, and the OFF-state indicator turns ON.
To check detection, move the test rod as shown in the diagram below.

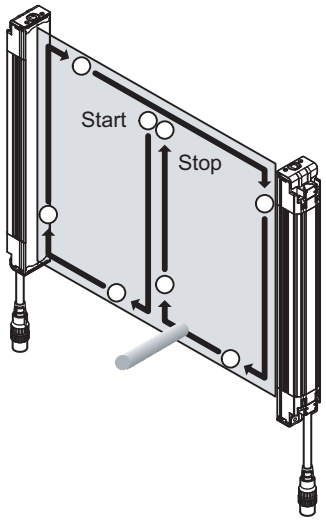

☐When the external test function is used:
The OFF-state indicator turns ON when the test input is short-circuited to 0V or open.

☐When the external device monitoring function is used:
When the F3SJ is blocked and the external device monitoring input terminal is open, it enters a lockout state.

■ Checking that Hazardous Parts Stop While the Machine Operates

☐The hazardous parts stop immediately when a test rod is inserted into the detection zone at 3 positions: "directly in front of the emitter", "directly in front of the receiver", and "between the emitter and receiver". (Use the appropriate test rod.)
☐The hazardous parts remain stopped as long as the test rod is in the detection zone.
☐The hazardous parts stop when the power of the F3SJ is turned OFF.
☐The actual response time of the whole machine is equal to or less than the calculated value.

Maintenance Checklists

⚠ WARNING

Perform daily and 6-month inspection for the F3SJ. Otherwise, the system may fail to work properly, resulting in serious injury.

Do not try to disassemble, repair, or modify this product. Doing so may cause the safety functions to stop working properly.

To ensure safety, keep a record of the inspection results.

When the user is a different person from those who installed or designed the system, he/she must be properly trained for maintenance.

Checklists

■ Inspection at Startup and When Changing Operators

☐There is no approach route other than through the detection zone of the F3SJ.
☐Part of the operator's body always remains in the detection zone of the F3SJ when working around the machine's hazardous part.
☐The actual safety distance is equal to or greater than the calculated value.
☐There must be no dirt on or damage to the optical surface, spatter protection cover (F39-HJ, sold separately), or environment-resistant casing (F39-EJ, sold separately) of the F3SJ.
☐OFF output indicator must be turned ON when the test input is short-circuited to 0V or open.
☐When muting function is used, a muting lamp must be clear and free of dirt or degradation.
☐The test rod is not deformed.
☐When the power of the F3SJ is turned ON while nothing is in the detection zone, power indicator and ON output indicator must turn ON within 2 seconds (2.2 seconds in case of series connection).
☐Nothing should exist in the detection zone and 5 incident light level indicators must turn ON at power on.
☐The test rod is detected when it is moved around in the detection zone as shown in the diagram below. In other words, when a test rod is inserted into the detection zone, all 5 incident light level indicators turn OFF, and the OFF output indicator turns ON.
Use an appropriate test rod based on the type code for inspection.

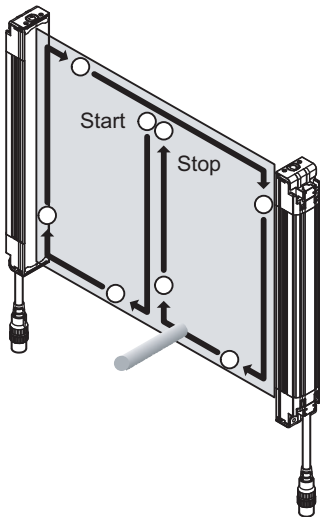

☐When muting function is used, installation condition of muting sensor must not be changed.
☐When muting function is used, muting status can be checked from where a worker operates or adjust the machine.
☐Neither connector, cap, or bracket must be loose.

■ Checking that Hazardous Parts Stop While the Machine Operates

- ☐The hazardous parts are movable when nothing is in the detection zone.
- ☐The hazardous parts stop immediately when a test rod is inserted into the detection zone at 3 positions: "directly in front of the emitter", "directly in front of the receiver", and "between the emitter and receiver". (Use the appropriate test rod.)
- ☐The hazardous parts remain stopped as long as the test rod is in the detection zone.
- ☐The hazardous parts stop when the power of the F3SJ is turned OFF while nothing is in the detection zone.

■ Items to Inspect Every 6 Months or When Machine Settings Are Changed

In addition to inspection item at operation start, following items must also be verified.

- ☐The outputs of the F3SJ and the machine are properly wired.
- ☐The total number of times that the control relays/contactors have switched is significantly lower than their design lives.
- ☐There is no disturbance light.
- ☐When F3SJ is connected again, a secondary sensor farthest from its power supply has either of the followings:
  - Cap
  - Key cap for muting
  - Muting lamp (set of lamp and cable)
- ☐Power supply's 0V must be grounded.
- ☐Wiring must not be bent, cracked, nor damaged.

Chapter6 Appendix

Troubleshooting	114
Accessories (Sold Separately)	121
Glossary	129
Related Standards	130
Revision History	132

Troubleshooting

Lockout State

If F3SJ detects any failure, it keeps safety output OFF and transitions to lockout state. Under lockout state, an emitter and a receiver set lockout indicator and OFF indicator blinking respectively, and F3SJ that detected the failure sets an error mode indicator ON or blinking based on the failure. Solve the problems based on the table below.*1

Eliminate the cause of the problem. Then turn the power on again or provide the reset input*2 to restart the F3SJ.

*1. If communication error is indicated on primary sensor's receiver, it may be caused by other F3SJ (emitter or secondary sensor). If a connector was disconnected before, especially in series connection, ensure that connection should not be loose and that internal connector pins should not be bent.

*2. In some conditions of communication between the emitter and receiver, the reset input may not restart the F3SJ.

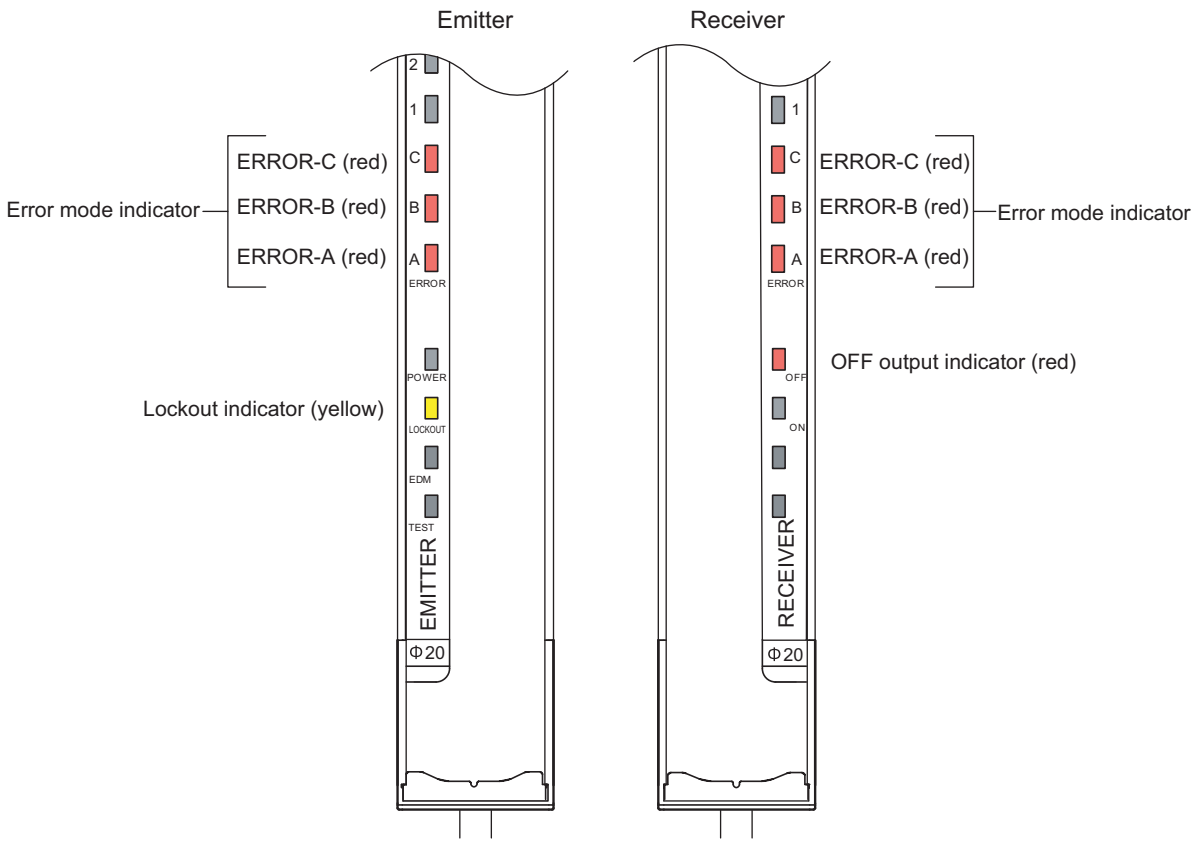

For other combinations of indication statuses of the error mode indicators on the emitter and receiver than in the table below, refer to the indication status information of the emitter and receiver, respectively in the table.

ON Blink OFF

Emitter	Receiver	Error code	Error Description	Cause	Solution
C B A	C B A	10, 11	Mutual interference error	Disturbance light is received.	Block the disturbance light. p.52
				The receiver is receiving light emitted from another photoelectric switch or F3SJ.	See Chapter 3 "Mutual Interference Prevention". p.52
C B A	C B A	19 *	Power supply capacity error	Power supply voltage is outside the rated range.	Connect to a 24VDC± 20% power supply voltage.
				Voltage fluctuation due to insufficient power supply capacity.	Replace the power supply with one that has a larger capacity.
				Instantaneous break or instantaneous stop due to power sharing with other devices.	Do not share the power supply with other devices, and connect to a power supply that is dedicated to devices for electrical-detection protective functions, such as the F3SJ, safety controller, muting sensor, etc.
C B A	C B A	30, 31, , 32, 37, 39	Communication error	The communication line or other wiring is broken or short-circuited.	Check the wiring and cables.
				Communication error due to noise.	Check the noise level in the environment around the communication line. The inductive noise tends to be induced especially if the signal line and the power line are arranged in parallel. Be sure to lay the power line away from the signal line.
				If the wiring is extended without using the exclusive cord (F39-JD□□), no cord with the same performance or more than the exclusive cord is used.	Use a cord (twisted-pair cable) with the same performance or more than the exclusive cord (F39-JD□□). Otherwise connect the shield to the 0V line.
				After eliminating the cause of the problem, power cycle the F3SJ.	
				A power cable or series connection cable connector is detached. If not, a contact failure due to the loose connector, the intrusion of liquid (oil etc.) into the connector, or the attachment of a foreign material has occurred.	Check connectors of power cable and series-connection cables. After cleaning the inside of the cap (if any foreign material is attached), tighten the cap more closely. Replace the cap if any liquid such as oil has intruded.
				Temporary power supply voltage reduction in motion.	Check for temporary power supply voltage reduction (by about 12VDC) by the influence of the induction load etc. If the exclusive power supply is not used, check the power consumption of other connected devices for enough capacity.
				Connection positions are reversed for emitter(s) and receiver(s) under series connection.	Correct connection positions of all F3SJ's emitters and receivers.
				Failure of F3SJ's internal circuit.	Replace the F3SJ.

Emitter	Receiver	Error code	Error Description	Cause	Solution
C B A	C B A	38	Lockout of other sensor than the primary receiver (error mode indicator will not turn on)	A sensor other than the primary receiver is in lockout when series-connected.	Solve the problem of an emitter or F3SJ in a series connection.
C B A	C B A	3A	Excessive number of beams	Total number of beams of F3SJs under series connection exceeds 240.	Rearrange series connection so that total number of beams of series connection should not exceed 240.
		3B	Excessive number of connected sensors	Four or more sensors are connected.	Number of F3SJs under series connection must be 3 or less.
		3C	Model error (between series connection)	Models of the primary sensor and secondary sensor are unavailable for connection. (Primary: PNP Output, Secondary: NPN Output, etc.)	Connect them properly. p.55
		3D	Model error (between emitter/ receiver)	Models are different between an emitter and a receiver (lengths, output types, or beam gaps are different)	
		3E	Sensor count error (no emitter)	Number of emitters under series connection is less than that of receivers (emitters: 2, receivers: 3, etc.)	
		3F	Sensor count error (no receiver)	Number of receivers under series connection is less than that of receivers (emitters: 3, receivers: 2, etc.)	
C B A	C B A	4E	Cap position error	Failure of F3SJ's internal circuit.	Replace the F3SJ.
		4F	Cap error	Cap is not attached.	Attach the cap properly.
				A contact failure due to the loose cap, the intrusion of liquid (oil etc.) into the cap, or the attachment of a foreign material has occurred.	After cleaning the inside of the cap (if any foreign material is attached), tighten the cap more closely. Replace the cap if any liquid such as oil has intruded.
C B A	C B A	50, 51, 52, 53	External device monitoring error	Relay is welded.	Replace the relay.
				The relay and external device monitoring input line are not properly wired.	Check the wiring for the relay.
				The relay response time exceeds the allowable delay time.	Replace the relay with one that has an appropriate response time.
				If short-circuit is made to an auxiliary output instead of a relay, the auxiliary output line is broken or short-circuited.	Make sure there is no failure in the external device monitoring input and auxiliary output lines.
				Emitter(s) and receiver(s) are reversely connected when connected to connector type controller. (Connectors of F3SP-B1P's emitter/receiver are reversely attached, etc.)	Check connectors' positions.

Emitter	Receiver	Error code	Error Description	Cause	Solution
C B A	C B A	5B, 5E	Incorrect wiring of reset input line/ white wire on the emitter side	The reset input line is not properly wired.	Check wiring of reset input line and emitter side white line. p.17
				Emitter side white line is short-circuited to 24V	
				Connection positions are reversed for emitter(s) and receiver(s).	Correct connection positions and directions of all F3SJs. p.57
				Connection direction is upside down for emitter(s).	
				Emitter(s) and receiver(s) are reversely connected when connected to connector type controller. (Connectors of F3SP-B1P's emitter/receiver are reversely attached, etc.)	Check connectors' positions.
				A contact failure due to the loose connector, the intrusion of liquid (oil etc.) into the connector, or the attachment of a foreign material has occurred.	After cleaning the inside of the connector (if any foreign material is attached), tighten the connector more closely.
				After eliminating the cause of the problem, power cycle the F3SJ.	
C B A	C B A	5D	Muting wiring error	The reset input line is not properly wired when muting enabling keycap is attached.	Wire the reset input line properly. p.28
				After eliminating the cause of the problem, power cycle the F3SJ.	
C B A	C B A	60, 61, 62, 63, 64, 65	Safety output error (1)	Safety output lines are short-circuited to each other at power on.	Wire the output lines properly. Check the safety output is in contact with other lines at the device or the connection.
				Safety output line and 24V, 0V, or other input/output line are short-circuited at power on.	
				Temporary power supply voltage reduction in motion.	Check for temporary power supply voltage reduction (by about 12VDC) by the influence of the induction load etc. If the exclusive power supply is not used, check the power consumption of other connected devices for enough capacity.

Emitter	Receiver	Error code	Error Description	Cause	Solution
				Effect of noise is excessive.	If other devices using the same power supply generate noise, do not share the same power supply with other devices and use it as that exclusive for the safety component. The inductive noise tends to be induced especially if the power line and the power supply line are arranged in parallel. Arrange the exclusive power supply near the light curtain or lay the power line away from the power line. If the power supply for operation is located near the power supply and it uses the same ground, it is subject to the influence of common mode noise from the ground. Separate the grounding point or use it as the exclusive ground.
				Failure of safety output circuit.	Replace the receiver.
				Connection positions are reversed for emitter(s) and receiver(s), or their directions are upside down.	Correct connection positions and directions of all F3SJs. p.57
			Series connection cable error (1)	Safety output error occurred due to short circuit, breakage, or disconnection of series connection cables.	Check if series connection cables are connected properly. Replace a series connection cable if it is broken.
	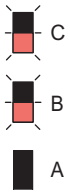	66, 67, 68, 69	Safety output error (2)	Safety output lines are short-circuited to each other after power on.	Wire the output lines properly. Check the safety output is in contact with other lines at the device or the connection.
				Safety output line and 24V, 0V, or other input/output line are short-circuited after power on.	
			Series connection cable error (2)	Safety output error occurred due to short circuit, breakage, or disconnection of series connection cables.	Check if series connection cables are connected properly. Replace a series connection cable if it is broken.
		80	Series connection cable error (3)	Series connection cable is broken. (Test input line of a series connection cable is broken)	Replace the series connection cable.
				A contact failure due to the loose connector, the intrusion of liquid (oil etc.) into the connector, or the attachment of a foreign material has occurred.	After cleaning the inside of the connector (if any foreign material is attached), tighten the connector more closely.

Emitter	Receiver	Error code	Error Description	Cause	Solution
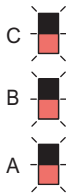	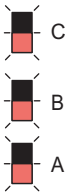	Error code other than those above	Effect of noise.	Effect of noise is excessive.	If other devices using the same power supply generate noise, do not share the same power supply with other devices and use it as that exclusive for the safety component. The inductive noise tends to be induced especially if the power line and the power supply line are arranged in parallel. Arrange the exclusive power supply near the light curtain or lay the power line away from the power line. If the power supply for operation is located near the power supply and it uses the same ground, it is subject to the influence of common mode noise from the ground. Separate the grounding point or use it as the exclusive ground.
			Lockout of other F3SJ in the series connection	Failure occurred in another F3SJ under series connection.	Solve the problem of F3SJ in a series connection.
			Failure of F3SJ's internal circuit.	F3SJ's internal circuit is damaged.	Replace the F3SJ.
			After eliminating the cause of the problem, power cycle the F3SJ.		

* When an error occurred, a supply voltage error may be recorded in addition to the original error code if supply voltage is out of specification range.

Problem under other state than lockout

Shown below are actions to take when F3SJ does not work properly while no lockout occurred or no error code is displayed.

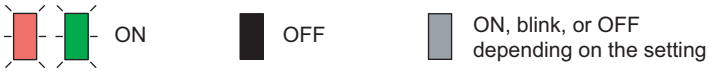

•Light intensity level indicators do not turn ON even if a beam receives light, while only the power indicator and OFF output indicator are being turned ON

Emitter	Receiver	Cause	Action
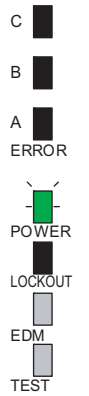	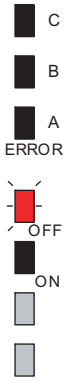	Beam is misaligned.	Adjust the beam so that it should receive light. A beam will not receive light if its installation surface is tilted or its height is misaligned. If the beam still does not receive light after adjustment, detach the F3SJ from installation surface, set an emitter and a receiver face to face, and check if the beam receives light. p.86
		Test input is being applied.	Check if the test indicator is blinking. If it is blinking, set the test input OFF.
		Detection surface of an emitter or a receiver is dirty.	Clean the surface.

• Light intensity level indicators do not turn ON even if a beam receives light, while only the power indicator, OFF output indicator, and receiver's error code A are being turned ON

Emitter	Receiver	Cause	Action
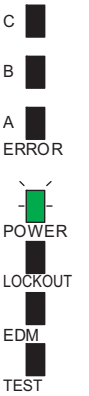	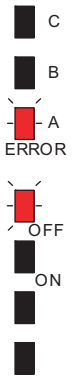	Communication line is broken between an emitter and a receiver. Or effect of noise on the communication line is too much.	Perform the proper wiring. Or, check the noise level in the environment around the communication line.
		Power connector is detached.	Plug the power connector tightly to ensure connection.

•Safety output may be turned OFF even if a beam is not blocked.

Cause	Action
Beam may be misaligned due to oscillation.	Install F3SJ sop that it should not be affected by oscillation. Also, adjust F3SJ beams based on "Adjustment Procedure p.86 ".
Light emitted from another F3SJ or photoelectric sensor is being received.	Solve the problems based on "Mutual Interference Prevention p.52 ".

Accessories (Sold Separately)

Cable with connector on one end (2 cables per set, for emitter and receiver)

Appearance	Model name	Cable length	Specifications
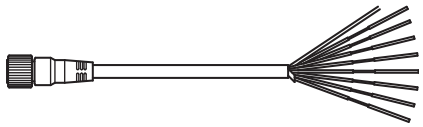	F39-JD3A	3m	M12 connector (8-pin) - 8 wires + Shield
	F39-JD7A	7m	
	F39-JD10A	10m	
	F39-JD15A	15m	
	F39-JD20A	20m	

Cable with connectors on both ends: For connection with F3SP-B1P or cable extension (2 cables per set, for emitter and receiver)

Appearance	Model name	Cable length	Specifications
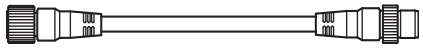	F39-JDR5B	0.5m	M12 connector (8-pin) - M12 connector (8-pin)
	F39-JD1B	1m	
	F39-JD3B	3m	
	F39-JD5B	5m	
	F39-JD7B	7m	
	F39-JD10B	10m	
	F39-JD15B	15m	
	F39-JD20B	20m	

Cable with connectors on both ends: For connection with G9SA-300-SC (2 cables per set, for emitter and receiver)

Appearance	Model name	Cable length	Specifications
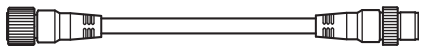	F39-JCR2C	0.2m	M12 connector (8-pin) - M12 connector (8-pin) For cable extension, use F39-JD□B so that F39-JC□C should be on the side of G9SA-300-SC.
	F39-JC1C	1m	
	F39-JC3C	3m	
	F39-JC7C	7m	
	F39-JC10C	10m	
	F39-JC15C	15m	

Connection cable (2 cables per set, for emitter and receiver)

Appearance	Model name	Cable length	Specifications
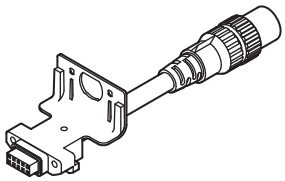	F39-JJR3K	0.3m	Cap (10-pin) - M12 connector (8-pin)

* Standard cable included with the F3SJ. Purchase a replacement when damaged or lost.

Simple Wiring Connector

Appearance	Model name	Note
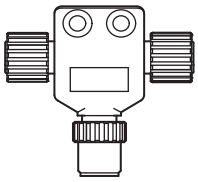	F39-CN5	This connector is used for a reduced wiring system, in combination with the following cables for reduced wiring system.

Cable for reduced wiring (2 cables per set, for emitter and receiver)

Appearance	Model name	Cable length	Note
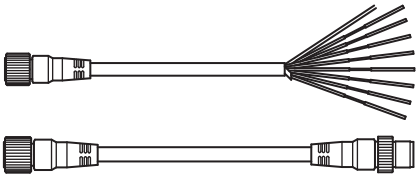	F39-JD0303BA	Emission: 3m Light Reception: 3m	Double-Ended Cable: F39-JD3B-L Single-Ended Cable: F39-JD3A-D
	F39-JD0307BA	Emission: 3m Light Reception: 7m	Double-Ended Cable: F39-JD3B-L Single-Ended Cable: F39-JD7A-D
	F39-JD0310BA	Emission: 3m Light Reception: 10m	Double-Ended Cable: F39-JD3B-L Single-Ended Cable: F39-JD10A-D
	F39-JD0503BA	Emission: 5m Light Reception: 3m	Double-Ended Cable: F39-JD5B-L Single-Ended Cable: F39-JD3A-D
	F39-JD0507BA	Emission: 5m Light Reception: 7m	Double-Ended Cable: F39-JD5B-L Single-Ended Cable: F39-JD7A-D
	F39-JD0510BA	Emission: 5m Light Reception: 10m	Double-Ended Cable: F39-JD5B-L Single-Ended Cable: F39-JD10A-D
	F39-JD1003BA	Emission: 10m Light Reception: 3m	Double-Ended Cable: F39-JD10B-L Single-Ended Cable: F39-JD3A-D
	F39-JD1007BA	Emission: 10m Light Reception: 7m	Double-Ended Cable: F39-JD10B-L Single-Ended Cable: F39-JD7A-D
	F39-JD1010BA	Emission: 10m Light Reception: 10m	Double-Ended Cable: F39-JD10B-L Single-Ended Cable: F39-JD10A-D

Note: Also available is a combination of cables for an emitter and a receiver with other lengths than the above. For details, contact Omron.
* 1. Double-ended cable for an emitter and single-end cable for a receiver.

Series connection cable for close contact (2 cables per set, for emitter and receiver)

Appearance	Model name	Cable length	Specifications
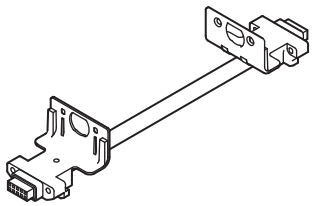	F39-JJR06L	0.06m	Cap (10-pin) - Cap (10-pin)
	F39-JJR15L	0.15m	

Series connection cable for extension (2 cables per set, for emitter and receiver)

Appearance	Model name	Cable length	Specifications
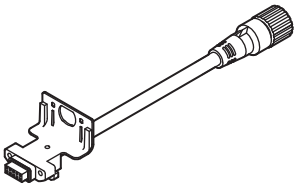	F39-JJR3W	0.3m	Cap (10-pin) - M12 connector (8-pin)

Universal indicator cable

Appearance	Model name	Cable length	Specifications
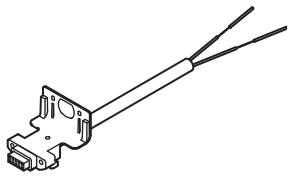	F39-JJ3N	3m	Cap (10-pin) - 2 wires

External indicator set

Appearance	Model name	Color	Specifications
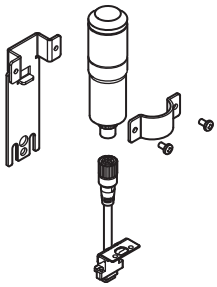	F39-A01PR-PAC	Red	Cap (10-pin) - M12 connector (8-pin) Mounting brackets included Cable length 0.1m
	F39-A01PG-PAC	Green	
	F39-A01PY-PAC	Yellow	

Key cap for muting

Appearance	Model name	Note
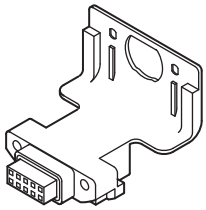	F39-CN6	Case color: Orange Can be used for emitter and receiver

Test input logic switching cap

Appearance	Model name	Note
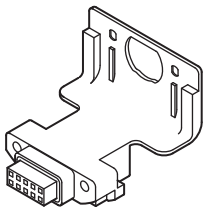	F39-CN7	Case color: Gray For an emitter - It will not function when attached to a receiver. - This function is available for F3SJ-A□□□□P□□-01TS and F3SJ-A□□□□N□□-01T only.

Control unit

Appearance	Model name	Output	Note
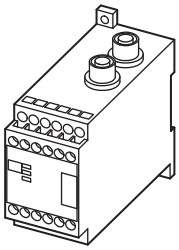	F3SP−B1P	Relay, 3a+1b contact	- F39-JD□B cable with connectors on both ends is required. - F3SJ with PNP output can be connected. - Cannot be used as a muting system.

Control unit

Appearance	Model name	Output	Note
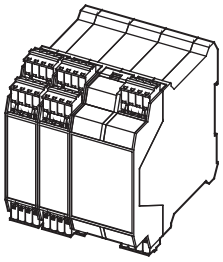	F3SX-N-□□□□	Relay, 2a+1b contact (expandable)	- A door switch, two-hand control switch, single beam, or relay unit can be added to the F3SX. - F3SJ with PNP output can be connected. - Can be used as a muting system if an F39-JD□A cable with connectors at both ends is used. - Various settings can be changed and input/output terminals can be monitored using the setting support software for F3SX.
	F3SX-E-□□□□	Solid-state output (DC solid-state safety output X 2, Auxiliary output X 3)	

Control unit

Appearance	Model name	Output	Note
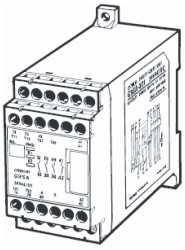	G9SA-301	Relay, 3a+1b contact	- F39-JD□A cable with connector on one end is required. - F3SJ with PNP output can be connected. - Type with 5a+1b contact is also available.

Control unit

Appearance	Model name	Output	Note
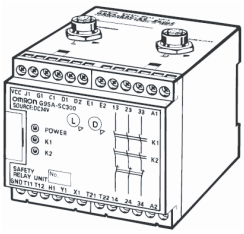	G9SA-300-SC	Relay, 3a contact	- One set of F39-JC□C cables with connectors on both ends is required. - When extending the cable length, use 1 set of F39-JC□C and multiple sets of F39-JD□B. - F3SJ with PNP output can be connected. - Cannot be used as a muting system.

Control unit

Appearance	Model name	Output	Note
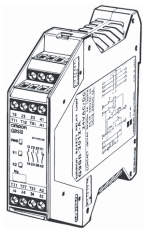	G9SB-301-B	Auto reset, 3a+1b contact	- F39-JD□A cable with connector on one end is required. - F3SJ with PNP output can be connected. - The thickness for 3a+1b contact type output is 25 mm. - The thickness for 2a contact type output is 17.5 mm.
	G9SB-301-D	Manual reset, 3a+1b contact	
	G9SB-200-B	Auto reset, 2a contact	
	G9SB-200-D	Manual reset, 2a contact	

Control unit

Appearance	Model name	Output	Note
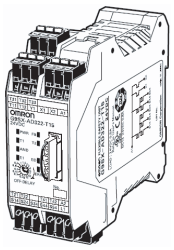	G9SX-AD322-T15	Solid-state output (Instantaneous output X 3, OFF-delay output X 2)	- F39-JD□A cable with connector on one end is required. - F3SJ with PNP output can be connected. - OFF-delay within 15 seconds can be set to 16 levels. - Use as instantaneous output is possible by setting OFF-delay output to 0 seconds. - Can be configured for partial control and total control. - Relay unit can also be connected.

Spatter Protection Cover (2 cables per set, one for emitter and one for receiver)

Appearance	Model name	Note
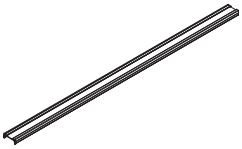	F39-HJ□□□□	In this table, the □□□□ in the model indicates the same 4-digit number as the protective height (□□□□ in the model) of the F3SJ.When a spatter-proof cover is attached, operating range of F3SJ is reduced by about 10%.Spatter-proof cover with 1970 or higher of □□□□ in the model is divided into 2 in combination to use.

Protect bar (2 sets, common for emitter/receiver)

Appearance	Model name	Note
	F39-PJ□□□□	Two protect bars are provided in a set (common for emitter/receiver). For side mounting of F3SJ with a width of 1001mm or wider, you must purchase protection bracket (4) for protect bar (F39-PJ-MS).

Protection bracket for protect bar (4)

Appearance	Model name	Note
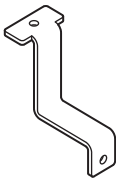	F39-PJ-MS	Intermediate mounting bracket for side mounting using a protect bar. You must purchase 1 set for one protect bar with F3SJ protective height from 1001 to 2000mm, or 2 sets for one protect with the protective height of 2009 to 2500mm.

Environment-resistant case

Appearance	Model name		Note
	For emitter	F39-EJ□□□□-L	One environment-resistant case is provided in a set. Mounting bracket is not included. You must purchase optional back-mounting bracket (F39-EJ-R) or side-mounting bracket (F39-EJ-S). When environment-resistant case is used, operating range is from 0.2 to 7m (protective height of 1649mm or less) and from 0.2 to 5m (protective height of 1655mm or more). If protective height of F3SJ is 600mm or more, only vertical mounting as shown left is available. A protective structure complies to IP67.
	For receiver	F39-EJ□□□□-D	

Back-mounting bracket for environment-resistant case

Appearance	Model name	Note
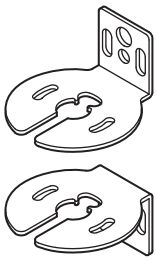	F39-EJ-R	2 brackets per set

Side-mounting bracket for environment-resistant case

Appearance	Model name	Note
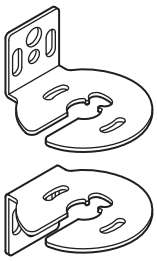	F39-EJ-S	2 brackets per set

Series connection cable for environment-resistant case

Appearance	Model name		Note
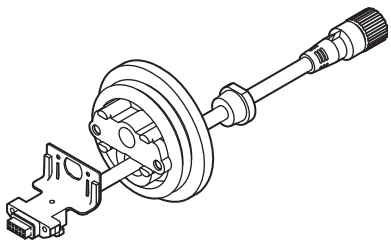	For emitter	F39-JJR3WE-L	Required for series connection with an environment-resistant case. Series-connection cable for 1 set of sensors.
	For receiver	F39-JJR3WE-D	

Top/bottom mounting bracket (for top/bottom mounting)

Appearance	Model name	Application	Note
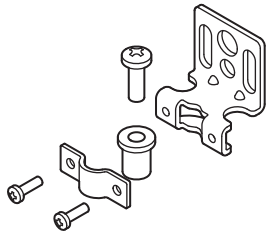	F39-LJ1	(Standard brackets included with the F3SJ) Purchase replacements when damaged or lost.	2 brackets for emitter, 2 brackets for receiver (4 brackets per set)

Side flat mounting bracket (4 brackets per set)

Appearance	Model name	Application	Note
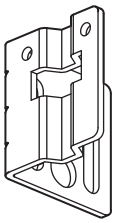	F39-LJ2	Use these small-sized brackets when performing side mounting with top/bottom mounting brackets, so that they do not protrude from the detection surface.	2 brackets for emitter, 2 brackets for receiver (4 brackets per set) (Use in combination with top/bottom mounting brackets)

Free-location mounting bracket (also used as standard mounting bracket)

Appearance	Model name	Application	Note
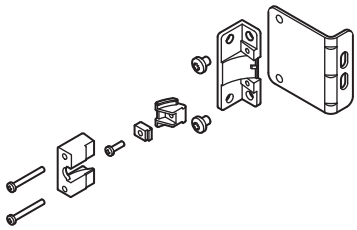	F39-LJ3	Brackets for mounting in any location without using top/bottom mounting brackets. Side mounting and backside mounting are possible.	2 brackets per set Same as the intermediate mounting brackets included for F3SJ with protective height larger than 595mm.

Top/bottom mounting bracket B

Appearance	Model name	Application	Note
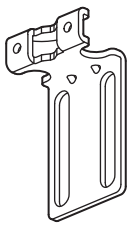	F39-LJ4	Mounting bracket used when replacing existing zone sensors with the F3SJ. Suitable for mounting hole pitch of 18 to 20mm.	2 brackets for emitter, 2 brackets for receiver (4 brackets per set) (Use in combination with top/bottom mounting brackets)

Mounting bracket for F3SN replacement

Appearance	Model name	Application	Note
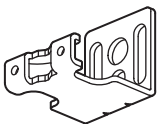	F39-LJ5	Mounting bracket used when an F3SN with protective height of 300mm or less is replaced by an F3SJ.	2 brackets for emitter, 2 brackets for receiver (4 brackets per set) (Use in combination with top/bottom mounting brackets)

Space-saving mounting bracket

Appearance	Model name	Application	Note
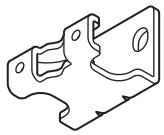	F39-LJ8	Brackets that can save mounting space for top and bottom	2 brackets for an emitter, 2 for a receiver (4 brackets per set)

Top/bottom mounting bracket C

Appearance	Model name	Application	Note
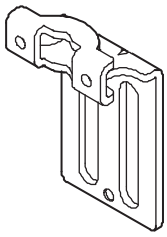	F39-LJ11	Mounting bracket used when replacing existing area sensors with the F3SJ. Suitable for mounting hole pitch of 12 to 14mm.	2 brackets for emitter, 2 brackets for receiver (4 brackets per set)

Test rod

Appearance	Model name	Diameter
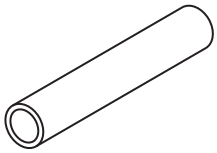	F39-TRD20 F39-TRD25	Dia. 20mm Dia. 25mm

CHECK!

To check operation before use, purchase and use the test rod.

Glossary

	Term	Definition
A	Allowable delay time	The allowable amount of time from when the safety output changes until the external device monitoring input changes. The F3SJ enters lockout if this time is exceeded.
	Auxiliary output 1	Allows output appropriate for the setting. This CANNOT be used for safety applications.
B	Basic system	This refers to the F3SJ in the state it is in when purchased. The basic system provides basic safety light curtain functions. Most functions can be used without performing additional configuration.
D	Detection capability	Minimum size of an object that can be detected in the protective height of the F3SJ.
E	Effective aperture angle (EAA)	Range of angles for which the F3SJ can operate.
	External device monitoring function (EDM)	Function that detects malfunctions, such as welding, in external relays (or contactors) that control the hazardous zone of a machine, by monitoring the operation of N.C. contact.
	External Indicator Output 1	Used to turn on muting lamps, etc. by output from a receiver. This CANNOT be used for safety applications.
	External Indicator Output 2	Used to turn on muting lamps, etc. by output from a emitter. This CANNOT be used for safety applications.
	External test	Function that stops emission at any time to check that the safety output is being properly turned OFF.
I	Interlock	Function that holds the safety outputs to OFF until safety is ensured and a reset input is applied.
	Interlock reset	Cancels the interlock state.
K	Key cap for muting	Connector that is attached to the end cap of an emitter or receiver to use muting function.
L	Lockout	Function that holds safety output OFF when an error is detected by the F3SJ.
M	Muting	Function that temporarily disables the safety function of the F3SJ, keeping the safety output ON even if beams are being blocked.
	Muting error	Occurs when muting input is not applied in the correct order. As long as the F3SJ is not interrupted, safety output does not turn OFF and normal operation continues.
	Muting input time limit value (maximum value)	This is the maximum value of the time difference for the inputs of muting input 1 and 2. It is set as 3s.
	Muting input time limit value (minimum value)	This is the minimum value of the time difference for the inputs of muting input 1 and 2. It is set as 0.03s.
	Muting input time with allowable waveform cracks	The maximum value of the time of the waveform cracks permitted by muting input 1 and muting input 2, when muting is in effect. It is set as 0.1s.
	Muting sensor	Input device, such as photoelectric sensor or proximity sensor, that inputs the timing of the start and end of the muting function.
	Muting system	This refers to the F3SJ when a key cap for muting is attached. The muting function can be used.
	Muting time limit	This is the muting function continuation time. The muting function is cancelled if the muting state continues for longer than this time limit.
O	Output operation mode	Details that are output from the auxiliary output or external indicator output.
P	Primary sensor	Name of the F3SJ connected nearest the power supply when series-connected.
R	Reset	Releases the interlock state/lockout state.
	Response time from ON to OFF	Time period from when the F3SJ is blocked until the safety output turns from ON to OFF.
S	Safety output (OSSD)	Outputs +24V when receiving light. Can be used for safety applications.
	Secondary sensor	Name used for F3SJ other than the primary sensor, when series-connected.

Related Standards

International Standards

- IEC61496-1:2020 Safety of machinery - Electro-sensitive protective equipment - Part 1: General requirements and tests
- IEC61496-2:2020 Safety of machinery - Electro-sensitive protective equipment - Part 2: Particular requirements for equipment using active opto-electronic protective devices
- IEC61508-1 to 3:2010 Functional safety of electrical/electronic/programmable electronic safety-related systems
- ISO13855:2002 Safety of machinery - Positioning of protective equipment with respect to the approach speeds of parts of the human body
- ISO13849-1 Safety of machinery - Safety-related parts of control systems - Part 1: General principles for design

European Standards

- EN ISO 13849-1 Safety of machinery - Safety-related parts of control systems - Part 1: General principles for design
- EN61496-1:2020 Safety of machinery - Electro-sensitive protective equipment - Part 1: General requirements and tests
- EN61496-2:2020 Safety of machinery - Electro-sensitive protective equipment - Part 2: Particular requirements for equipment using active opto-electronic protective devices
- EN61508-1 through -3:2010 Functional safety of electrical/electronic/programmable electronic safety-related systems
- EN415-4:1997 Palletisers and depalletisers
- EN692:1996 Mechanical presses
- EN693:2001 Hydraulic presses
- EN999:1999 Safety of machinery - Positioning of protective equipment with respect to the approach speeds of parts of the human body
- EN1037:1995 Safety of machinery : Preventation of unexpected start-up

U.S. Federal Regurations

- OSHA 29 CFR 1910.212 General requirements for all machines
- OSHA 29 CFR 1910.217 Mechanical power presses

U.S. Standards

- ANSI B11.1:2001 Mechanical power presses
- ANSI B11.2:1995(R2005) Hydraulic power presses
- ANSI B11.3:2002 Power press brakes
- ANSI B11.4:2003 Metal shears
- ANSI B11.5:1988(R2002) Iron workers
- ANSI B11.6:2001 Lathes
- ANSI B11.7:1995(R2005) Cold headers and cold formers
- ANSI B11.8:2001 Drilling, milling, and boring machines
- ANSI B11.9:1975(R2005) Grinding machines
- ANSI B11.10:2003 Metal sawing machines
- ANSI B11.11:2001 Gear cutting machines
- ANSI B11.12:2005 Roll forming and roll bending machines

- ANSI B11.13:1992(R1998) Single- and multiple-spindle automatic bar and chucking machines
- ANSI B11.14:1996 Coil slitting machines/systems
- ANSI B11.15:2001 Pipe, tube, and shape bending machines
- ANSI B11.16:2003 Metal powder compacting presses
- ANSI B11.17:2004 Horizontal hydraulic extrusion presses
- ANSI B11.18:1997 Machines and machinery systems for processing strip, sheet or plate from coiled configuration
- ANSI B11.19:2003 Performance criteria for the design, construction, care, and operation of safeguarding when referenced by the other B11 machine tool safety standards
- ANSI/RIA 15.06:1999 Industrial robots & robot systems safety requirements
- UL1998:1998 Safety-related software
- UL508:1999 Industrial control equipment
- UL61496-1:2002 Electro-sensitive protective equipment - Part 1: General requirements and tests
- UL61496-2:2002 Electro-sensitive protective equipment - Part 2: Particular requirements for active opto-electronic protective devices

Canadian Standards

- CAN/CSA C22.2 No.14-05 Industrial control equipment
- CAN/CSA C22.2 No.08-M19868(R2003) Electronics integrated safety functions
- CSA Z142-02 Code for power press operation: Health, safety, and guarding requirements
- CSA Z432-04 Safeguarding of machinery
- CCSA Z434-03 Industrial robots and robot systems : General safety requirements

SEMI Standards

- SEMI S2-0703 Environmental, health, and safety guideline for semiconductor manufacturing equipment

JIS Standards

- JIS B 9704-1:2015 Safety of machinery - Electro-sensitive protective equipment - Part 1 : General requirements and tests
- JIS B 9704-2:2008 Safety of machinery - Electro-sensitive protective equipment - Part 2 : Particular requirements for equipment using active opto-electronic protective devices

Revision History

A manual revision code appears as a suffix to the manual number at the bottom of the front and back covers of this manual.

SCHG-722 R

↑

Revision No.

Revision symbol	Revision date	Revisions
A	July, 2006	First edition
B	December, 2006	Addition of F3SJ-A□□□□P25-01TS series
C	July, 2007	Troubleshooting revised
D	August, 2008	Changed mounting screw. Added information to "Precautions for Correct Use".
E	January, 2010	Added the contents about new Machinery Directives Minor correction
F	November, 2011	Added the contents about EN ISO13849-1:2008 Change the contents about EN 61496-2
G	November, 2012	Added and corrected dimensions and notes. Corrected the contents about EN 61508. Correction of errors.
H	July, 2014	Corrected the output waveform of the safety output of the self test function. Updated the dates of effect for standards. Changed the content of "Terms and Conditions Agreement". Added simple wiring connectors and reduced wiring cables Added single-ended cable and double-ended cable models Changed the test rod as an optional accessory. Minor correction
J	July, 2015	Updated the dates of effect for standards.
K	February, 2018	Updated the year of the applicable standards. Corrected the contents of the ratings (input voltage) and wiring examples. Deleted the discontinued production models. Corrected the condition of the length of the power cable and series connection cable. Corrected the output timing chart of the wiring diagram. Corrected the placement of the muting sensor. Changed the contents about the safety distance. Added the contents about the simple wiring connector. Changed the contents about the checklists. Changed the accessories. Corrected the erroneous description.
L	July, 2018	Corrected the year of the applicable standards.
M	May 2020	Updated the year of EN ISO 13849-1 and ISO 13849-1. Updated the electrical symbols in circuit diagrams. Minor corrections.
N	September, 2023	Change in quantity of accessories (Instruction sheet, Quick installation manual). Changed Vibration and Shock resistance specifications based on revision of EN 61496-1. Corrected the description of the check for a muting lamp in Maintenance Checklists.
P	June 2023	Renewal of conformity year of standard
R	July 2026	Descriptions of the Machinery Regulation are added.

OMRON Corporation **Industrial Automation Company**

Kyoto, JAPAN **Contact : www.ia.omron.com**

Regional Headquarters

OMRON EUROPE B.V.
Wegalaan 67-69, 2132 JD Hoofddorp
The Netherlands
Tel: (31) 2356-81-300 Fax: (31) 2356-81-388

OMRON ELECTRONICS LLC
2895 Greenspoint Parkway, Suite 200
Hoffman Estates, IL 60169 U.S.A.
Tel: (1) 847-843-7900 Fax: (1) 847-843-7787

OMRON ASIA PACIFIC PTE. LTD.
438B Alexandra Road, #08-01/02 Alexandra
Technopark, Singapore 119968
Tel: (65) 6835-3011 Fax: (65) 6835-3011

OMRON (CHINA) CO., LTD.
Room 2211, Bank of China Tower,
200 Yin Cheng Zhong Road,
PuDong New Area, Shanghai, 200120, China
Tel: (86) 21-6023-0333 Fax: (86) 21-5037-2388

Authorized Distributor:

©OMRON Corporation 2006-2026 All Rights Reserved.
In the interest of product improvement,
specifications are subject to change without notice.

Cat. No. SCHG-722R 0726 (0706)