OMRON

Safety Light Curtain

F3SJ-E□□□□N25
F3SJ-B□□□□N25 Series

User's Manual

Cat. No. SCHG-733K

Original instructions

Introduction

Thank you for purchasing the F3SJ-E/B Series Safety Light Curtain (hereinafter referred to as the "F3SJ-E/B").
This is the instruction manual describing the use of F3SJ-E/B.
Always heed the following points when using the F3SJ-E/B:

- Be sure to have F3SJ-E/B be handled by a "Responsible Person" who is well aware of and familiar with the machine to be installed.
- The term "Responsible Person" used in this User's Manual means the person qualified, authorized and responsible to secure "safety" in each process of the design, installation, operation, maintenance services and disposition of the machine.
- It is assumed that F3SJ-E/B will be used properly according to the installation environment, performance and function of the machine. Responsible Person should conduct risk assessment on the machine and determine the suitability of this product before installation.
- Read this Manual thoroughly to understand and make good use of the descriptions before installing and operating the product.
- Keep this Manual at the place where the operator can refer to whenever necessary.

Legislation and Standards

1. An F3SJ-E/B does not receive type approval provided by Article 44-2 of the Industrial Safety and Health Act of Japan. Therefore, the F3SJ-E/B cannot be used as a "safety system for pressing or shearing machines" prescribed in Article 42 of that law.
2. The F3SJ-E/B is electro-sensitive protective equipment (ESPE) in accordance with European Union (EU) Machinery Regulation Index Annex II, Item 2
3. EC Declaration of Conformity
   OMRON declares that the F3SJ-E/B is in conformity with the requirements of the following EU Regulations and EC Directives:
   Machinery Regulation (EU) 2023/1230
   EMC Directive 2014/30/EU
4. The F3SJ-E/B is in conformity with the following standards:
   (1)European standards
   EN 61496-1 (Type 4 ESPE), EN 61496-2 (Type 4 AOPD), EN 61508-1 through -3 (SIL3),
   EN 61000-6-4, EN ISO 13849-1 (Category 4, PL e)
   (2)International standards
   IEC 61496-1 (Type 4 ESPE), IEC 61496-2 (Type 4 AOPD), IEC 61508-1 through -3 (SIL3),
   ISO 13849-1 (Category 4, PL e)
   (3)JIS standards
   JIS B 9704-1 (Type 4 ESPE), JIS B 9704-2 (Type 4 AOPD)
   (4)North American Standards:
   UL 61496-1 (Type 4 ESPE), UL 61496-2 (Type 4 AOPD), UL 508, UL 1998, CAN/CSA C22.2 No.14,
   CAN/CSA C22.2 No.0.8
5. The F3SJ-E/B received the approvals of EC Type-Examination in accordance with the EU Machinery Regulation, Type 4 ESPE and Type 4 AOPD from the EU accredited body, TÜV SÜD Product Service GmbH.
6. The F3SJ-E/B received the certificates of UL listing for US and Canadian safety standards, Type 4 ESPE and Type 4 AOPD from the Third Party Assessment Body UL.
7. The F3SJ-E/B is designed according to the standards listed below. To make sure that the final system complies with the following standards and regulations, you are asked to design and use it in accordance with all other related standards, laws, and regulations. If you have any questions, consult with specialized organizations such as the body responsible for prescribing and/or enforcing machinery safety regulations in the location where the equipment is to be used.
   - •European Standards: EN415-4, EN692, EN693
   - •U.S. Occupational Safety and Health Standards: OSHA 29 CFR 1910.212
   - •U.S. Occupational Safety and Health Standards: OSHA 29 CFR 1910.217
   - •American National Standards: ANSI B11.1 to B11.19
   - •American National Standards: ANSI/RIA 15.06
   - •Canadian Standards Association CSA Z142, Z432, Z434
   - •SEMI Standards SEMI S2
   - •Japan Ministry of Health, Labour and Welfare "Guidelines for Comprehensive Safety Standards of Machinery", Standard Bureau's Notification No. 0731001 dated July 31, 2007.

Terms and Conditions Agreement

Read and understand this catalog.

Please read and understand this catalog before purchasing the products. Please consult your OMRON representative if you have any questions or comments.

Warranties.

(a) Exclusive Warranty. Omron's exclusive warranty is that the Products will be free from defects in materials and workmanship for a period of twelve months from the date of sale by Omron (or such other period expressed in writing by Omron). Omron disclaims all other warranties, express or implied.

(b) Limitations. OMRON MAKES NO WARRANTY OR REPRESENTATION, EXPRESS OR IMPLIED, ABOUT NON-INFRINGEMENT, MERCHANTABILITY OR FITNESS FOR A PARTICULAR PURPOSE OF THE PRODUCTS. BUYER ACKNOWLEDGES THAT IT ALONE HAS DETERMINED THAT THE PRODUCTS WILL SUITABLY MEET THE REQUIREMENTS OF THEIR INTENDED USE.

Omron further disclaims all warranties and responsibility of any type for claims or expenses based on infringement by the Products or otherwise of any intellectual property right. (c) Buyer Remedy. Omron's sole obligation hereunder shall be, at Omron's election, to (i) replace (in the form originally shipped with Buyer responsible for labor charges for removal or replacement thereof) the non-complying Product, (ii) repair the non-complying Product, or (iii) repay or credit Buyer an amount equal to the purchase price of the non-complying Product; provided that in no event shall Omron be responsible for warranty, repair, indemnity or any other claims or expenses regarding the Products unless Omron's analysis confirms that the Products were properly handled, stored, installed and maintained and not subject to contamination, abuse, misuse or inappropriate modification. Return of any Products by Buyer must be approved in writing by Omron before shipment. Omron Companies shall not be liable for the suitability or unsuitability or the results from the use of Products in combination with any electrical or electronic components, circuits, system assemblies or any other materials or substances or environments. Any advice, recommendations or information given orally or in writing, are not to be construed as an amendment or addition to the above warranty.

See http://www.omron.com/global/ or contact your Omron representative for published information.

Limitation on Liability; Etc.

OMRON COMPANIES SHALL NOT BE LIABLE FOR SPECIAL, INDIRECT, INCIDENTAL, OR CONSEQUENTIAL DAMAGES, LOSS OF PROFITS OR PRODUCTION OR COMMERCIAL LOSS IN ANY WAY CONNECTED WITH THE PRODUCTS, WHETHER SUCH CLAIM IS BASED IN CONTRACT, WARRANTY, NEGLIGENCE OR STRICT LIABILITY. Further, in no event shall liability of Omron Companies exceed the individual price of the Product on which liability is asserted.

Suitability of Use.

Omron Companies shall not be responsible for conformity with any standards, codes or regulations which apply to the combination of the Product in the Buyer's application or use of the Product. At Buyer's request, Omron will provide applicable third party certification documents identifying ratings and limitations of use which apply to the Product. This information by itself is not sufficient for a complete determination of the suitability of the Product in combination with the end product, machine, system, or other application or use. Buyer shall be solely responsible for determining appropriateness of the particular Product with respect to Buyer's application, product or system. Buyer shall take application responsibility in all cases.

NEVER USE THE PRODUCT FOR AN APPLICATION INVOLVING SERIOUS RISK TO LIFE OR PROPERTY OR IN LARGE QUANTITIES WITHOUT ENSURING THAT THE SYSTEM AS A WHOLE HAS BEEN DESIGNED TO ADDRESS THE RISKS, AND THAT THE OMRON PRODUCT(S) IS PROPERLY RATED AND INSTALLED FOR THE INTENDED USE WITHIN THE OVERALL EQUIPMENT OR SYSTEM.

Programmable Products.

Omron Companies shall not be responsible for the user's programming of a programmable Product, or any consequence thereof.

Performance Data.

Data presented in Omron Company websites, catalogs and other materials is provided as a guide for the user in determining suitability and does not constitute a warranty. It may represent the result of Omron's test conditions, and the user must correlate it to actual application requirements. Actual performance is subject to the Omron's Warranty and Limitations of Liability.

Change in Specifications.

Product specifications and accessories may be changed at any time based on improvements and other reasons. It is our practice to change part numbers when published ratings or features are changed, or when significant construction changes are made. However, some specifications of the Product may be changed without any notice. When in doubt, special part numbers may be assigned to fix or establish key specifications for your application. Please consult with your Omron's representative at any time to confirm actual specifications of purchased Product.

Errors and Omissions.

Information presented by Omron Companies has been checked and is believed to be accurate; however, no responsibility is assumed for clerical, typographical or proofreading errors or omissions.

Precautions on Safety

Regarding the alert symbols and meanings used for the safe uses

In order to use the F3SJ-E/B safely, the precautions listed in this manual indicated by alert symbols and descriptions must be followed. Failure to follow all precautions and alerts may result in an unsafe use or operation.

The following indications and symbols are used for the descriptions.

⚠ WARNING	Indicates a potentially hazardous situation which, if not avoided, will result in minor or moderate injury, or may result in serious injury or death. Additionally there may be significant property damage.

Meanings of Alert Symbols

	Indicates prohibited actions.
	Indicates mandatory actions.
	Indicates the risk of electric shock.

Alert Statements in this Manual

For users

⚠ WARNING

The F3SJ-E/B must be installed, configured, and incorporated into a machine control system by a sufficiently trained and qualified person. An unqualified person may not be able to perform these operations properly, which may cause a person to go undetected, resulting in serious injury.

Read this manual thoroughly and understand the procedures of installation, operation check and maintenance.

For machines

⚠ WARNING

Do not use this sensor for machines that cannot be stopped by electrical control. For example, do not use it for a pressing machine that uses full-rotation clutch. Otherwise, the machine may not stop before a person reaches the hazardous part, resulting in serious injury.

For installation

⚠ WARNING

Make sure to test the operation of the F3SJ-E/B after installation to verify that the F3SJ-E/B operates as intended. Make sure to stop the machine until the test is complete. Unintended function settings may cause a person to go undetected, resulting in serious injury.

Make sure to install the F3SJ-E/B at the safe distance from the hazardous part of the equipment. Otherwise, the machine may not stop before a person reaches the hazardous part, resulting in serious injury.

Install a protective structure so that the hazardous part of a machine can only be reached by a person that passes through the sensor's detection zone. Install the sensors so that part of the person is always present in the detection zone when working in a machine's hazardous zones, eliminating areas where the sensors do not reach. If a person is able step into the hazardous zone of a machine and remain behind the F3SJ-E/B's detection zone, configure the system with an interlock function that prevents the machine from being restarted. Failure to do so may result in serious injury.

Install the interlock reset switch in a location that provides a clear view of the entire hazardous zone and where it cannot be activated from within the hazardous zone.

The F3SJ-E/B cannot protect a person from a projectile exiting the hazardous zone. Install protective cover(s) or fence(s).

Install the F3SJ-E/B so that it is not affected by a reflective surface. Failure to do so may hinder detection, resulting in serious injury. Details on installation distance from the reflective surface, see "Distance from Reflective Surfaces" on page 45.

When using more than one set of F3SJ-E/Bs, install them so that mutual interference does not occur, such as by configuring series connections or using physical barriers between adjacent sets.

Make sure that the F3SJ-E/B is securely mounted and its cables and connectors are properly secured.

Do not use the sensor system with mirrors in a retro-reflective configuration as shown below. Doing so may hinder detection. It is possible to use mirrors to "bend" the detection zone to a 90-degree angle.

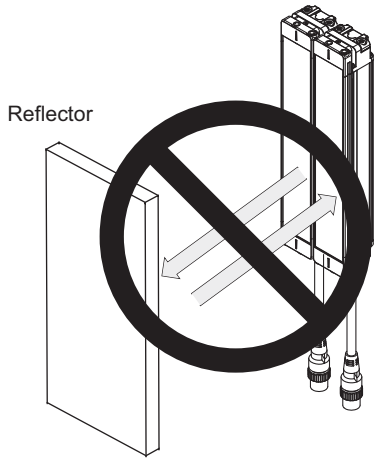

Position with retro-reflection

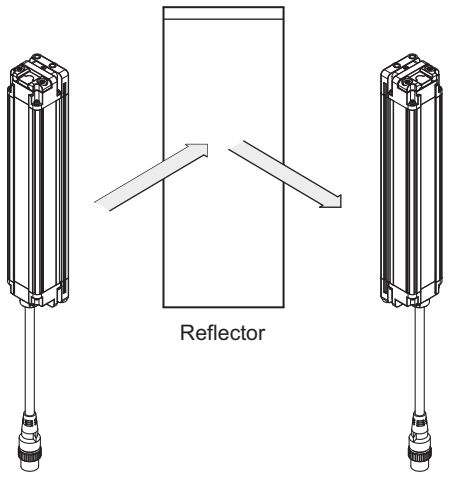

Position with detection zone bent at 90°

Perform an inspection for all F3SJ-E/B as described in "Chapter 5 Checklists".

Install muting sensors so that they can distinguish between the object that is being allowed to be passed through the detection zone and a person. If the muting function is activated by the detection of a person, it may result in serious injury.

Use independent two input devices for muting inputs.

The muting and override functions disable the safety functions of the device. You must ensure safety using other method when these functions are operating.

Install the switch that uses hold-to-run device such as a spring-return key switch and is installed in a location that provides a clear view of the entire hazardous zone and where it cannot be activated from within the hazardous zone. Make sure that nobody is in the hazardous zone before activating the override function.

For wiring

⚠ WARNING

Connect the load between the output and +24 V line (NPN output). Connecting the load between the output and 0 V line will result in a dangerous condition because operation is reversed to "ON when blocked".

Do not short-circuit the output line to the 0 V line. Otherwise, the output is always ON. Also, the +24 V of the power supply must be grounded so that output does not turn ON due to grounding of the output line.

Configure the system by using the optimal number of safety outputs that satisfy the requirements of the necessary safety category.

Do not connect each line of F3SJ-E/B to a DC power supply of more than 24 VDC+20%. Also, do not connect to an AC power supply. Failure to do so may result in electric shock or breakdown of the device.

Make sure to perform wiring while the power supply is OFF.

Do not use the auxiliary output for safety applications. Human body may not be detected when F3SJ-B fails, resulting in serious injury.

For the F3SJ-E/B to comply with IEC 61496-1 and UL 508, the DC power supply unit must satisfy all of the following conditions:

- Must be within the rated power voltage (24 VDC ± 20%)
- Must have tolerance against the total rated current of devices if it is connected to multiple devices
- Must comply with EMC directives (industrial environment)
- Double or reinforced insulation must be applied between the primary and secondary circuits
- Automatic recovery of overcurrent protection characteristics
- Output holding time must be 20 ms or longer
- Must satisfy output characteristic requirements for class 2 circuit or limited voltage current circuit defined by UL 508. Refer to p.87 for details.
- Must comply with laws and regulations, regarding EMC and electrical equipment safety, of the country or region where the F3SJ-E/B is used (Ex: In EU, the power supply must comply with the EMC Directive and the Low Voltage Directive.)

Double or reinforced insulation from hazardous voltage must be applied to all input and output lines. Failure to do so may result in electric shock.

Extension of the cable must be within a specified length. If it isn't, safety function may not work properly, resulting in danger.

Other

⚠ WARNING

To use the F3SJ-E/B in PSDI mode (Reinitiation of cyclic operation by the protective equipment), you must configure an appropriate circuit between the F3SJ-E/B and the machine. For details about PSDI, refer to OSHA1910.217, IEC 61496-1, and other relevant standards and regulations.

Do not try to disassemble, repair, or modify this product. Doing so may cause the safety functions to stop working properly.

Do not use the F3SJ-E/B in environments where flammable or explosive gases are present. Doing so may result in explosion.

Perform daily and 6-month inspections for the F3SJ-E/B. Otherwise, the system may fail to work properly, resulting in serious injury.

Do not use radio equipment such as cellular phones, walkie-talkies, or transceivers near the F3SJ-E/B.

Precautions for Safe Use

Make sure to observe the following precautions that are necessary for ensuring safe use of the product.
Do not install the F3SJ-E/B in the following types of environments:

- Areas exposed to intense interference light, such as direct sunlight
- Areas with high humidity where condensation is likely to occur
- Areas where oil mist or corrosive gases are present
- Areas exposed to vibration or shock levels higher than in the specification provisions
- Areas where the product may come into contact with water
- Areas with pollution degree 3 or harsher
- Areas where the product may get wet with oil that can solve adhesive

• Loads must satisfy both of the following conditions:
  - Not short-circuited
  - Not used with a current that is higher than the rating
• Do not drop the product.
• Install the emitter and receiver to the same vertical direction.
• Dispose of the product in accordance with the relevant rules and regulations of the country or area where the product is used.
• Make sure to tighten the connectors of the cables securely.
• When replacing the cable connectors with other types of connectors, use connectors that provide a protection grade of IP54 or higher.
• Be sure to route the input/output lines for the F3SJ-E/B separate from high-potential power lines or through an exclusive conduit.
• To extend a cable length with a cable other than the dedicated cable, use a cable with the same or superior specifictions.
• The cable extension length must be within the specified length (30 m max).
• In environments where foreign material such as spatter adheres to the F3SJ-E/B, attach a cover to protect the F3SJ-E/B from the spatter.
• PC Setting Support Software "SD Manager" (F39-GWUM) and Setting Console (F39-MC21) are available only for F3SJ-A series. Do not use these setting tools for F3SJ-E/B series.

Precautions for Correct Use

Observe the precautions described below to prevent operation failure, malfunctions, or undesirable effects on product performance.

■ Storage conditions and installation environment

•Do not install, use, or store the F3SJ-E/B for a long time at a temperature or humidity out of the specified range.
•This is a class A product. In residential areas it may cause radio interference, in which case the Responsible Person may be required to take adequate measures to reduce interference.
•F3SJ-E/B can be used at altitudes up to 2,000 meters.

■ Wiring and installation

•Make sure to perform wiring while the power supply is OFF. Otherwise, the F3SJ-E/B may fail to operate due to the diagnosis function.
•Do not short-circuit output lines to 0 V line. Otherwise a fault of F3SJ-E/B may occur.

- When extending the communication line with a cable (twisted-pair wire) other than the dedicated cable (F39-JD□□), use a cable with the same or superior specifications. Connect the shield to the 0V line.
  Cable specification (extension cable) p.91
- Properly perform the wiring after confirming the signal names of all the terminals.
- Be sure that there is nothing in the detection zone and the stable-state indicator is turned ON after power is turned ON.
- Do not operate the control system until 2 seconds or more after turning ON the power of the F3SJ-E/B.
- Be sure to route the F3SJ-E/B cable separate from high-potential power lines or through an exclusive conduit.
- When using a commercially available switching regulator power supply, make sure to ground the FG terminal (frame ground terminal).
- If the protective height is more than 1,105 mm, use intermediate brackets of specified quantities and locations according to the dimensions.
  If the brackets described above are not used, ratings and performance cannot be met.
- Do not install the F3SJ-E/B close to a device that generates high-frequency noise. Otherwise, take sufficient blocking measures.
- Sharing the power supply with other devices may cause the F3SJ-E/B to be affected by noise or voltage drop. It is recommended that this safety component use a dedicated power supply but do not share with other devices.

■ Cleaning

Do not use thinner, benzene, or acetone for cleaning, because they affect the product's resin parts and paint on the extrusion.

■ Object detection

The F3SJ-E/B cannot detect transparent and/or translucent objects.

Contents

Legislation and Standards i
Terms and Conditions Agreement ii
Precautions on Safety iv
Precautions for Safe Use viii
Precautions for Correct Use viii

Chapter1 Overview and Specifications 1

Basic Configuration and Names 2
Model Overview 3
Easy Type 3
Basic Type 3
Internal (LED) Indicator Display Pattern 4
Easy Type 4
Basic Type 4
Ratings/Specifications 6
Model/Current Consumption List 9

Chapter2 System Configuration and Functions 11

How to Select a Model/System 12
Selection Flowchart 12
Function List 12
Wiring Diagrams 13
Easy Type 13
Basic Type (Basic System) 14
Basic Type (Muting System) 17
Description of Functions 18
External Test Function 18
Self-test Function 19
Lockout Reset Function 20
Interlock Function 21
Auxiliary Output Function 22
External Device Monitoring Function 23
Muting Function 24
Override Function 36

Chapter3 Wiring/Installation 39

Installation Conditions 40
Detection Zone and Approach 40

Safety Distance 41
Distance from Reflective Surfaces 45
Mutual Interference Prevention 45
Series Connection 47
Connection Procedure 49
Dimensions 50
Difference between Easy Type and Basic Type 50
When Using Top/Bottom and Intermediate Brackets 51
When Using Intermediate Brackets Only (Free-Location Mounting) 55
When Using One-touch Brackets 59
When Using Replacement Brackets 64
When Using Contact Mount Brackets 67
When Using Spatter Protection Cover 70
Mounting 71
Mounting Method 71
Number of Brackets Required 71
Mounting Procedure 72
Wiring 86
Wiring Precautions 86
Power Supply Unit 87
Wiring Method (Easy Type) 88
Wiring Method (Basic Type) 88

Chapter4 Input/Output Circuit and Applications 93

Input/Output Circuit 94
Easy Type 94
Basic Type 95
Wiring Examples 96
Using F3SJ-E Only 96
Using F3SJ-B Only 97
Connecting a F3SJ-E to Various Controllers 99
Connecting a F3SJ-B to Two Muting Sensors 100
Connecting a F3SJ-B to Four Muting Sensors 101
Connecting a F3SJ-B to Various Controllers 102
Using a simple wiring connector for F3SJ-B 103

Chapter5 Checklists 105

Pre-Operation Checklists 106
Checklists 106
Maintenance Checklists 108

Checklists 108

Chapter6 Appendix 111

Troubleshooting 112

Lockout State 112

Warning View 112

Troubleshooting Methods 114

Muting Error Indication 117

Optional Accessories (Sold Separately) 118

Glossary 123

Related Standards 125

International Standards 125

European Standards 125

US Occupational Safety and Health Standards 125

US Standards 125

Canadian Standards 126

SEMI Standards 126

JIS Standards 126

Chapter1 Overview and Specifications

Basic Configuration and Names	2
Model Overview	3
Easy Type	3
Basic Type	3
Internal (LED) Indicator Display Pattern	4
Easy Type	4
Basic Type	4
Ratings/Specifications	6
Model/Current Consumption List	9

Basic Configuration and Names

This section describes the system configuration and part names of the F3SJ-E/B. (The picture below is a F3SJ-B)

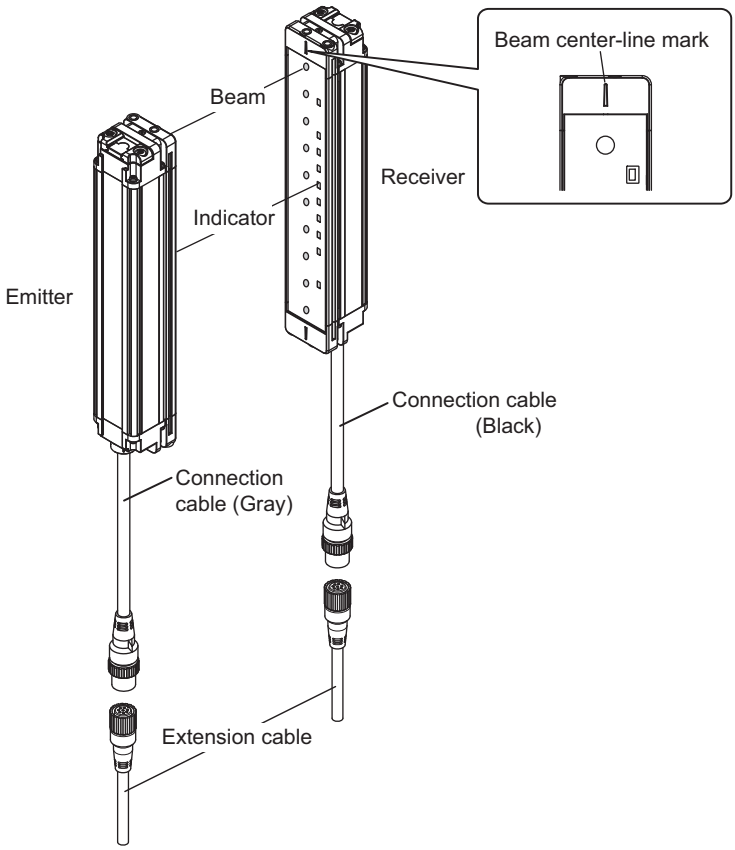

Component	Model	Description
Emitter, receiver 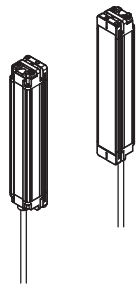	F3SJ-E□□□□N25-□	Select a type name based on the required protective height. The model name can be understood as follows: F3SJ-E□□□□N25-□ 1 2 3 4 1: Protective height (mm) 2: Output type (N for NPN output type *1) 3. Detection capability (mm) 4: L for emitter, D for receiver, blank for a set of emitter and receiver. *1. A hyphen "-" is added instead of "N" for emitter.
Emitter, receiver 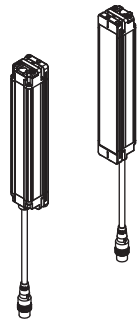	F3SJ-B□□□□N25-□	Select a type name based on the required protective height. The model name can be understood as follows: F3SJ-B□□□□N25-□ 1 2 3 4 1: Protective height (mm) 2: Output type (N for NPN output type *1) 3. Detection capability (mm) 4: L for emitter, D for receiver, blank for a set of emitter and receiver. *1. A hyphen "-" is added instead of "N" for emitter.

CHECK!

To distinguish between the emitter and receiver, find the labels attached to the front of the F3SJ-E/B. The label on the emitter reads "EMITTER" and the label on the receiver reads "RECEIVER".

Model Overview

There are two sensor types: F3SJ-E and F3SJ-B as follows:

Easy Type

The model name is represented as F3SJ-E□□□□N25.
The Easy Type can be easily used as it limits functions available as external test and lockout reset with less wiring (emitter: 5-wire, receiver: 6-wire)

Basic Type

The model name is represented as F3SJ-B□□□□N25.
The Basic Type offers more functions than the Easy Type, allowing you to select a system (basic or muting) according to your application.
Functions available for each system are as follows:

- Basic system
  The default is set as basic system.
  Functions: external test, lockout reset, interlock, external device monitoring, auxiliary output and series connection.

- Muting system
  Muting system can be used by replacing the cap with Muting Key Cap (F39-CN10).
  Functions: external test, lockout reset, auxiliary output, muting, override and series connection.

For details on cap replacement, refer to "Upgrading F3SJ-B for muting system" on page 25.

Internal (LED) Indicator Display Pattern

Easy Type

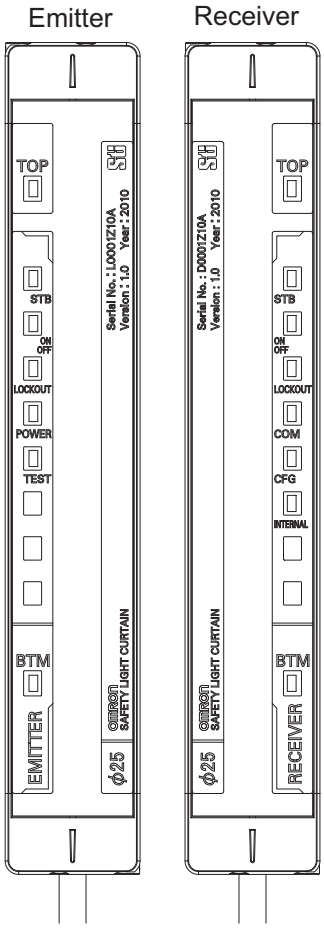

1. Top-beam-state indicator (Blue)
2. Stable-state indicator (Green)
3. ON/OFF-state indicator (Green/Red)
4. Lockout indicator (Red)
5. Power indicator (Green)
6. Test indicator (Green)
10. Bottom-beam-state indicator (Blue)

1. Top-beam-state indicator (Blue)
2. Stable-state indicator (Green)
3. ON/OFF-state indicator (Green/Red)
4. Lockout indicator (Red)
5. Communication indicator (Green)
6. Configuration indicator (Green)
7. Internal error indicator (Red)
10. Bottom-beam-state indicator (Blue)

Basic Type

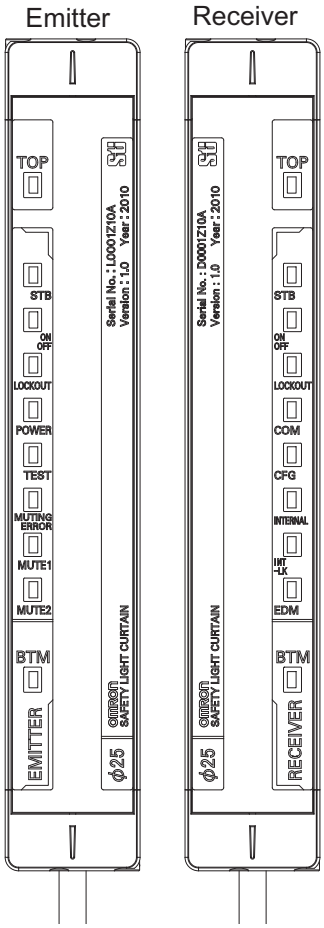

1. Top-beam-state indicator (Blue)
2. Stable-state indicator (Green)
3. ON/OFF-state indicator (Green/Red)
4. Lockout indicator (Red)
5. Power indicator (Green)
6. Test indicator (Green)
7. Muting error indicator (Green)
8. Muting input 1 indicator (Green)
9. Muting input 2 indicator (Green)
10. Bottom-beam-state indicator (Blue)

1. Top-beam-state indicator (Blue)
2. Stable-state indicator (Green)
3. ON/OFF-state indicator (Green/Red)
4. Lockout indicator (Red)
5. Communication indicator (Green)
6. Configuration indicator (Green)
7. Internal error indicator (Red)
8. Interlock indicator (Yellow)
9. External device monitoring indicator (Green)
10. Bottom-beam-state indicator (Blue)

Emitter

No.	Internal indicator		Easy Type	Basic Type	ON	Blinking
1	Top-beam-state indicator	TOP	✓*1	✓	Turns ON when the top beam is receiving light.	Blinks during muting/override, or when cap error or connection error occurs.*1
2	Stable-state indicator	STB	✓	✓	Turns ON when incidence level is 170% or more of the output ON threshold.	Blinks when the safety output is turned OFF due to disturbance light or vibration.
3	ON/OFF-state indicator	ON OFF	✓	✓	Green: Turns ON when safety output is ON. Red: Turns ON when safety output is OFF.	Red: Blinks when the F3SJ-E/B enters a lockout due to a safety output error.
4	Lockout indicator	LOCKOUT	✓	✓	Turns ON when the F3SJ-E/B enters a lockout on the receiver.	Blinks when the F3SJ-E/B enters a lockout on the emitter.
5	Power indicator	POWER	✓	✓	Turns ON while the power of the emitter is ON.	Blinks when the F3SJ-E/B enters a lockout due to power voltage/ noise.
6	Test indicator	TEST	✓	✓	–	Blinks when external test is being performed.
7	Muting error indicator	MUTING ERROR	–	✓	–	Blinks during a muting error.*1 For details, refer to Muting Error Indication in Chapter 6: Troubleshooting on page 117 .
8	Muting input 1 indicator	MUTE1	–	✓	Turns ON when muting input 1 is ON under the muting system.	–
9	Muting input 2 indicator	MUTE2	–	✓	Turns ON when muting input 2 is ON under the muting system.	–
10	Bottom-beam-state indicator	BTM	✓*1	✓	Turns ON when the bottom beam is receiving light.	Blinks during muting/override.*1

*1. The Easy Type does not have muting/override and series connection functions.

Receiver

No.	Internal indicator		Easy Type	Basic Type	ON	Blinking
1	Top-beam-state indicator	TOP	✓*1	✓	Turns ON when the top beam is receiving light.	Blinks during muting/override, or when cap error or connection error occurs.*1
2	Stable-state indicator	STB	✓	✓	Turns ON when incidence level is 170% or more of the output ON threshold.	Blinks when the safety output is turned OFF due to disturbance light or vibration.
3	ON/OFF-state indicator	ON OFF	✓	✓	Green: Turns ON when safety output is ON. Red: Turns ON when safety output is OFF.	Red: Blinks when the F3SJ-E/B enters a lockout due to a safety output error.
4	Lockout indicator	LOCKOUT	✓	✓	Turns ON when the F3SJ-E/B enters a lockout on the emitter.	Blinks when the F3SJ-E/B enters a lockout on the receiver.
5	Communication indicator	COM	✓	✓	Turns ON when communication between emitter and receiver is established.	Blinks when the F3SJ-E/B enters lockout due to a communication error between receiver and emitter.
6	Configuration indicator	CFG	✓	✓	–	Blinks when the F3SJ-E/B enters lockout due to a model type error between receiver and emitter.
7	Internal error indicator	INTERNAL	✓	✓	–	Blinks when the F3SJ-E/B enters a lockout due to an internal error.
8	Interlock indicator	INT -LK	–	✓	Turns ON when the F3SJ-E/B is in interlock state.	Blinks when the F3SJ-E/B enters a lockout due to a wiring error.
9	External device monitoring indicator	EDM	–	✓	Turns ON when an input is given to external device monitoring input. *2	Blinks when the F3SJ-E/B enters a lockout due to an external device monitoring error.
10	Bottom-beam-state indicator	BTM	✓*1	✓	Turns ON when the bottom beam is receiving light.	Blinks during muting/override.*1

*1. The Easy Type does not have muting/override and series connection functions.
*2. It turns ON when there is an external device monitoring input regardless of the availability of the external device monitoring.

Ratings/Specifications

The model names of the F3SJ-E/B contain the 4 digits indicating the protective height (mm).

Item / Model	Easy Type	Basic Type
	F3SJ-E□□□□N25	F3SJ-B□□□□N25
Detection capability	Opaque objects	
	25 mm diameter	
Beam gap	20 mm	
Number of beams	8 to 54	8 to 102
Protective height	185 to 1,105 mm	185 to 2,065 mm
Lens diameter	5 mm	
Operating range	0.2 to 7 m	
Response time	ON to OFF: 15 ms max. (Response time when used alone or in 2 or 3 connected) OFF to ON: 70 ms max. (Response time when used alone or in 2 or 3 connected)	
Startup waiting time	2 s max.	
Power supply voltage (Vs)	SELV/PELV 24 VDC±20% (ripple p-p 10% max.)	
Current consumption	Refer to "Model/Current Consumption List" on page 9.	
Light source	Infrared LED (870 nm wavelength)	
Effective aperture angle (EAA)	Based on IEC 61496-2. Within ±2.5° for both emitter and receiver at an operating range of 3 meters or more.	
Safety output (OSSD)	Two NPN transistor outputs, Load current: 200 mA max., Residual voltage: 2 V max. (except for voltage drop due to cable extension), Leakage current: 1 mA max., Load inductance: 2.2 H max. *1 Maximum capacitive load: 1 μF *2	
Auxiliary output	–	One NPN transistor output Load current: 100 mA max. Residual voltage: 2 V max.(except for voltage drop due to cable extension) Leakage current: 1 mA max.
Output operation mode	Safety output: ON when receiving light	Safety output: On when receiving light Auxiliary output: - Basic system Reverse output of safety output - Muting system ON during muting/override
Input voltage	Test input: ON voltage: 0 V to 3 V (short circuit current approx. 4.0 mA) OFF voltage: 1/2 Vs to Vs, or open *3 (short circuit current approx. 3.0 mA)	Test input, Interlock selection input, Reset input, Muting input: ON voltage: 0 V to 3 V (short circuit current approx. 4.0 mA) OFF voltage: 1/2 Vs to Vs, or open *3 (short circuit current approx. 3.0 mA) External device monitoring input: ON voltage: 0 V to 3 V (short circuit current approx. 5.5 mA) OFF voltage: open
Overvoltage category	II (IEC 60664-1)	
Indicator	Refer to "Internal (LED) Indicator Display Pattern" on page 4.	
Mutual interference prevention function	Mutual interference prevention algorithm prevents interference in up to three sets.	
Series connection function	–	Number of connections: Up to three sets Total number of beams: Up to 192 Maximum connection cable length: 7 m (connection cable (F39-JBR2W) and F3SJ's cable are not included)
Test function	Self-test (at power-on, and during operation) External test (light emission stop function by test input)	
Safety-related functions	–	Interlock (basic system) External device monitoring (basic system) Muting (muting system) Override (muting system)

*1. The load inductance is the maximum value when the safety output frequently repeats ON and OFF. When you use the safety output at 4 Hz or less, the usable load inductance becomes larger.
*2. These values must be taken into consideration when connecting elements including a capacitive load such as a capacitor.
*3. The Vs indicates a voltage value in your environment.

Item / Model		Easy Type	Basic Type
		F3SJ-E□□□□N25	F3SJ-B□□□□N25
Protection circuit		Output short-circuit protection, and power supply reverse polarity protection	
Ambient temperature		During operation: -10 to 55°C (non-freezing), During storage: -25 to 70°C	
Ambient humidity		During operation: 35 to 85%RH (non-condensing), During storage: 35 to 95%RH	
Ambient light intensity		Incandescent lamp: 3,000 lx max. on receiving surface. Sunlight: 10,000 lx max. on receiving surface.	
Insulation resistance		20 MΩ or higher (500 VDC)	
Dielectric strength		1,000 VAC, 50/60 Hz, 1 min	
Degree of protection		IP65 (IEC 60529)	
Vibration resistance		Class 3M4 (IEC TR 60721-4-3) Operation limit: 5~150Hz, Multiple amplitude of 7 mm, Acceleration of 1G, 10 sweeps each in X, Y, and Z directions (no delay at resonant frequencies)	
Shock resistance		Class 3M4 (IEC TR 60721-4-3) Operation limit: Acceleration of 15G, Pulse duration of 6ms, 100 shocks for each in X, Y, and Z directions (600 shocks in total)	
Pollution degree		Pollution degree 3 (IEC 60664-1)	
Power cable	Connection method	Prewired cable, cable length 3 m	Prewired connector cable, cable length 0.3 m Connector type (M12, 8-pin) Connector: IP67 rated (when mated)
	Number of wires	Emitter: 5 wires, receiver: 6 wires	8 wires
	Cable diameter	Dia. 6 mm	
	Allowable bending radius	R5 mm	
Series connection cable (F39-JBR2W)	Connection method	–	Prewired connector cable, cable length 0.2 m Connector type (M12, 8-pin) Connector: IP67 rated (when mated)
	Number of wires		8 wires
	Cable diameter		Dia. 6 mm
	Allowable bending radius		R5 mm
Extension cable (F39-JD□A, JD□B)	Connection method	Refer to "<Extension cable>" on page 91.	Connector method (M12, 8-pin) IP67 degree of protection for connector (fitting) For details about twisted pair wires (single-ended cable) p.88, (double-ended cable) p.89 For details about total extension cable length
	Number of wires		8 wires
	Cable diameter		Dia. 6.6 mm
	Allowable bending radius		R36 mm
Extension cable		30 m max.	
Material		Case: Aluminum Cap: ABS resin, PBT Optical cover: PMMA resin (acrylic) Cable: Oil resistant PVC	
Net weight *4		F3SJ-E□□□□N25 Weight (g) = (protective height) x 1.59 + 330	F3SJ-B□□□□N25 Weight (g) = (protective height) x 1.62 + 110
Weight (packaged) *5		Weight (g) = (protective height) x 2.6 + 800	Weight (g) = (protective height) x 2.7 + 500

Item / Model	Easy Type	Basic Type
	F3SJ-E□□□□N25	F3SJ-B□□□□N25
Accessories	Quick Installation Manual(QIM), Instruction manual	
Applicable standards	Refer to "Legislation and Standards" on page i.	
Proof test interval T_1 Mission time T_M	20 years (IEC 61508, ISO 13849-1)	
Safety-related characteristic data (EN 61508:2010)	See http://www.fa.omron.co.jp/safety_6en/	

*4. The net weight is the weight of an emitter and a receiver.
*5. The gross weight is the weight of an emitter, a receiver, included accessories and a package.

Model/Current Consumption List

■ Easy Type

Model	Number of beams	Protective height [mm]	Current consumption	
Easy Type (F3SJ-E□□□□N25)			Emitter	Receiver
F3SJ-E0185N25	8	185	29.0 mA	36.0 mA
F3SJ-E0225N25	10	225	31.0 mA	36.0 mA
F3SJ-E0305N25	14	305	34.0 mA	37.0 mA
F3SJ-E0385N25	18	385	37.0 mA	38.0 mA
F3SJ-E0465N25	22	465	41.0 mA	40.0 mA
F3SJ-E0545N25	26	545	44.0 mA	41.0 mA
F3SJ-E0625N25	30	625	47.0 mA	42.0 mA
F3SJ-E0705N25	34	705	50.0 mA	43.0 mA
F3SJ-E0785N25	38	785	54.0 mA	44.0 mA
F3SJ-E0865N25	42	865	57.0 mA	45.0 mA
F3SJ-E0945N25	46	945	60.0 mA	46.0 mA
F3SJ-E1025N25	50	1025	63.0 mA	47.0 mA
F3SJ-E1105N25	54	1105	58.0 mA	48.0 mA

■ Basic Type

Model	Number of beams	Protective height [mm]	Current consumption	
Basic Type (F3SJ-B□□□□N25)			Emitter	Receiver
F3SJ-B0185N25	8	185	41.0 mA	43.0 mA
F3SJ-B0225N25	10	225	43.0 mA	43.0 mA
F3SJ-B0305N25	14	305	46.0 mA	44.0 mA
F3SJ-B0385N25	18	385	49.0 mA	46.0 mA
F3SJ-B0465N25	22	465	52.0 mA	47.0 mA
F3SJ-B0545N25	26	545	55.0 mA	48.0 mA
F3SJ-B0625N25	30	625	58.0 mA	49.0 mA
F3SJ-B0705N25	34	705	62.0 mA	50.0 mA
F3SJ-B0785N25	38	785	65.0 mA	51.0 mA
F3SJ-B0865N25	42	865	68.0 mA	52.0 mA
F3SJ-B0945N25	46	945	71.0 mA	53.0 mA
F3SJ-B1025N25	50	1025	75.0 mA	54.0 mA
F3SJ-B1105N25	54	1105	69.0 mA	55.0 mA
F3SJ-B1185N25	58	1185	72.0 mA	57.0 mA
F3SJ-B1265N25	62	1265	75.0 mA	58.0 mA
F3SJ-B1345N25	66	1345	77.0 mA	59.0 mA
F3SJ-B1425N25	70	1425	80.0 mA	60.0 mA
F3SJ-B1505N25	74	1505	83.0 mA	61.0 mA
F3SJ-B1585N25	78	1585	85.0 mA	62.0 mA
F3SJ-B1665N25	82	1665	88.0 mA	63.0 mA
F3SJ-B1745N25	86	1745	91.0 mA	64.0 mA
F3SJ-B1825N25	90	1825	93.0 mA	65.0 mA
F3SJ-B1905N25	94	1905	96.0 mA	67.0 mA
F3SJ-B1985N25	98	1985	99.0 mA	68.0 mA
F3SJ-B2065N25	102	2065	101.0 mA	69.0 mA

Chapter2 System Configuration and Functions

How to Select a Model/System 12

Selection Flowchart 12
Function List 12

Wiring Diagrams 13

Easy Type 13
Basic Type (Basic System) 14
Basic Type (Muting System) 17

Description of Functions 18

External Test Function 18
Self-test Function 19
Lockout Reset Function 20
Interlock Function 21
Auxiliary Output Function 22
External Device Monitoring Function 23
Muting Function 24
Override Function 36

How to Select a Model/System

Selection Flowchart

The required system configuration depends on the functions to be used. Use the following flowchart to determine the model/system.

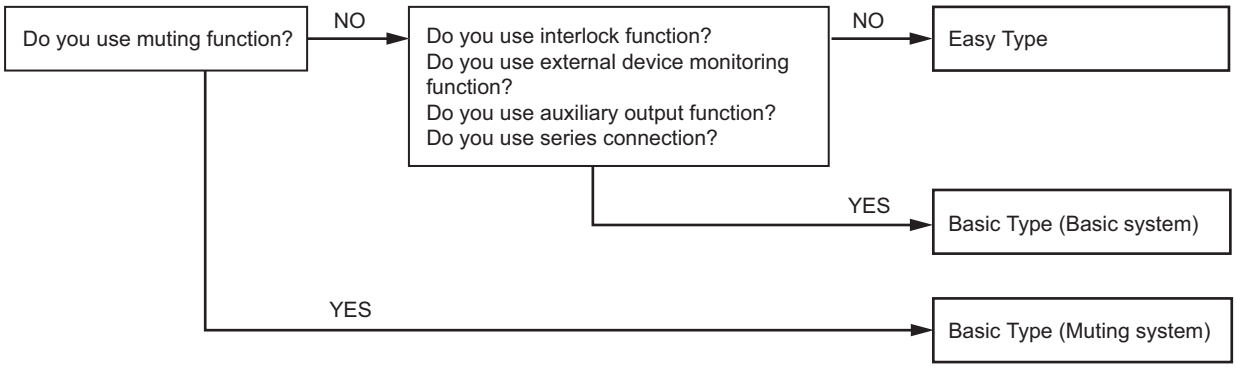

Function List

Function	Easy Type	Basic Type Basic system	Basic Type Muting system
Self-test	✓	✓	✓
External test	✓	✓	✓
Interlock		✓	
External device monitoring		✓	
Auxiliary output		✓	✓
Muting			✓
Override			✓
Series connection		✓	✓

Wiring Diagrams

Easy Type

■ Minimum wiring required to check the operation of the F3SJ-E

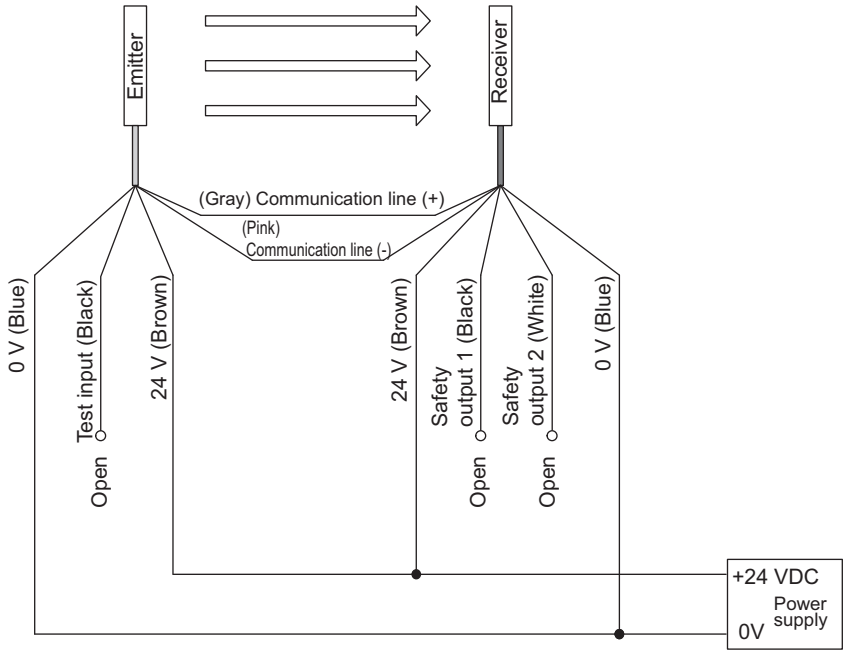

■ Wiring when using test input line

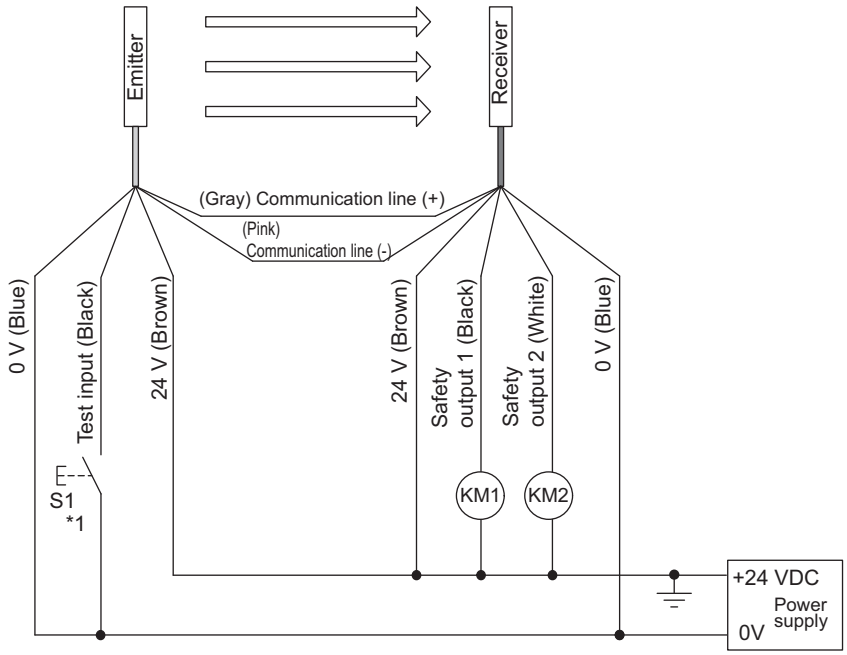

S1 : External test/lockout reset switch (connect to 24 V if a switch is not required)
KM1, KM2 : Safety relay with force-guided contact (G7SA) or magnetic contactor

*1. Use a switch for small loads (input specifications: 24 V, 3 mA).

Basic Type (Basic System)

■ Minimum wiring required to check the operation of the F3SJ-B
(Wiring for auto reset mode and deactivated external device monitoring)

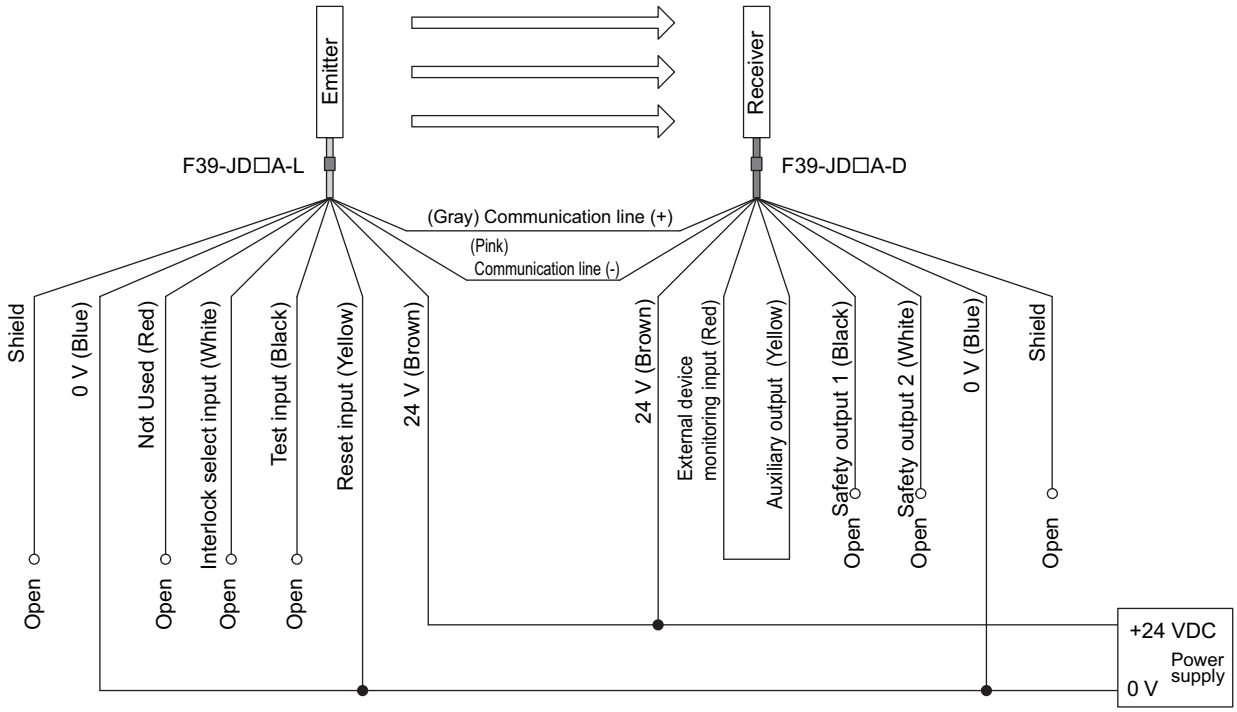

■ Wiring when using manual reset mode and external device monitoring

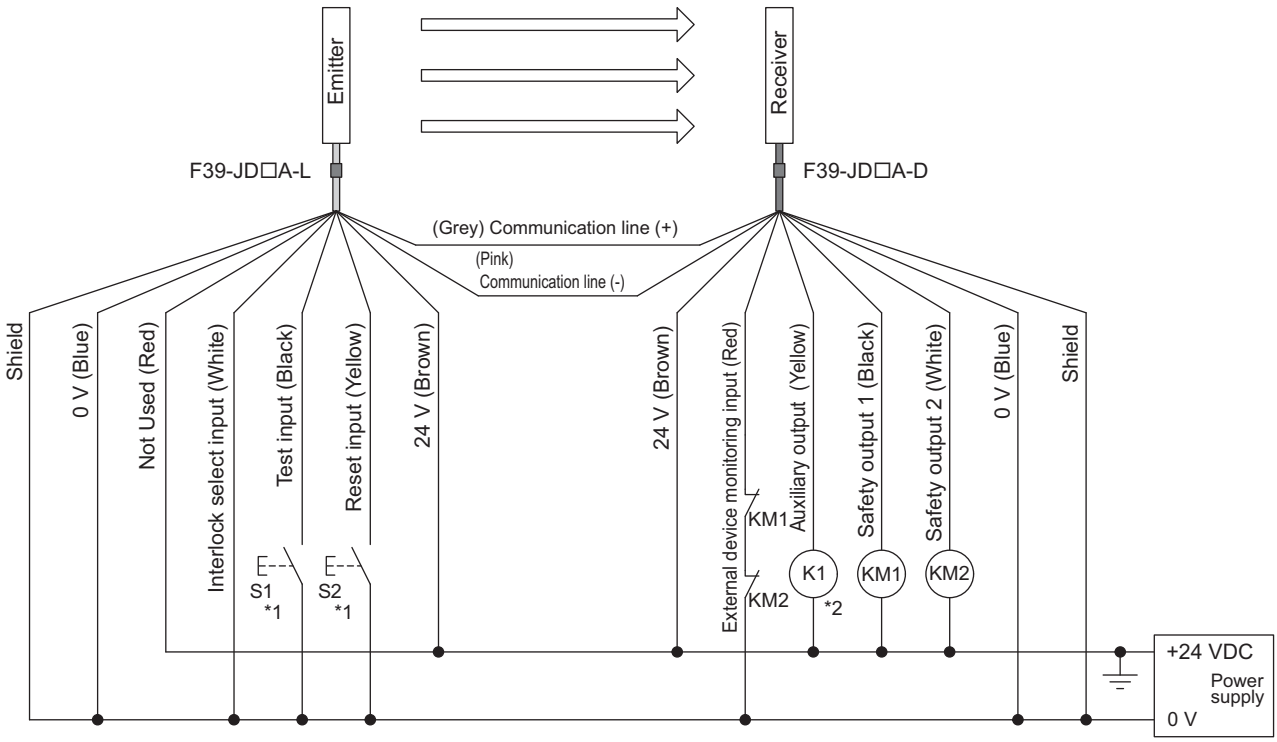

S1 : External test switch (connect to 24 V if a switch is not required)
S2 : Interlock/lockout reset switch
KM1, KM2 : Safety relay with force-guided contact (G7SA) or magnetic contactor
K1 : Load or PLC, etc. (for monitoring)

*1. Use a switch for small loads (input specifications: 24 V, 1.0 mA max.).
*2. F3SJ operates even when K1 is not connected.

■ Wiring for auto reset mode and external device monitoring function

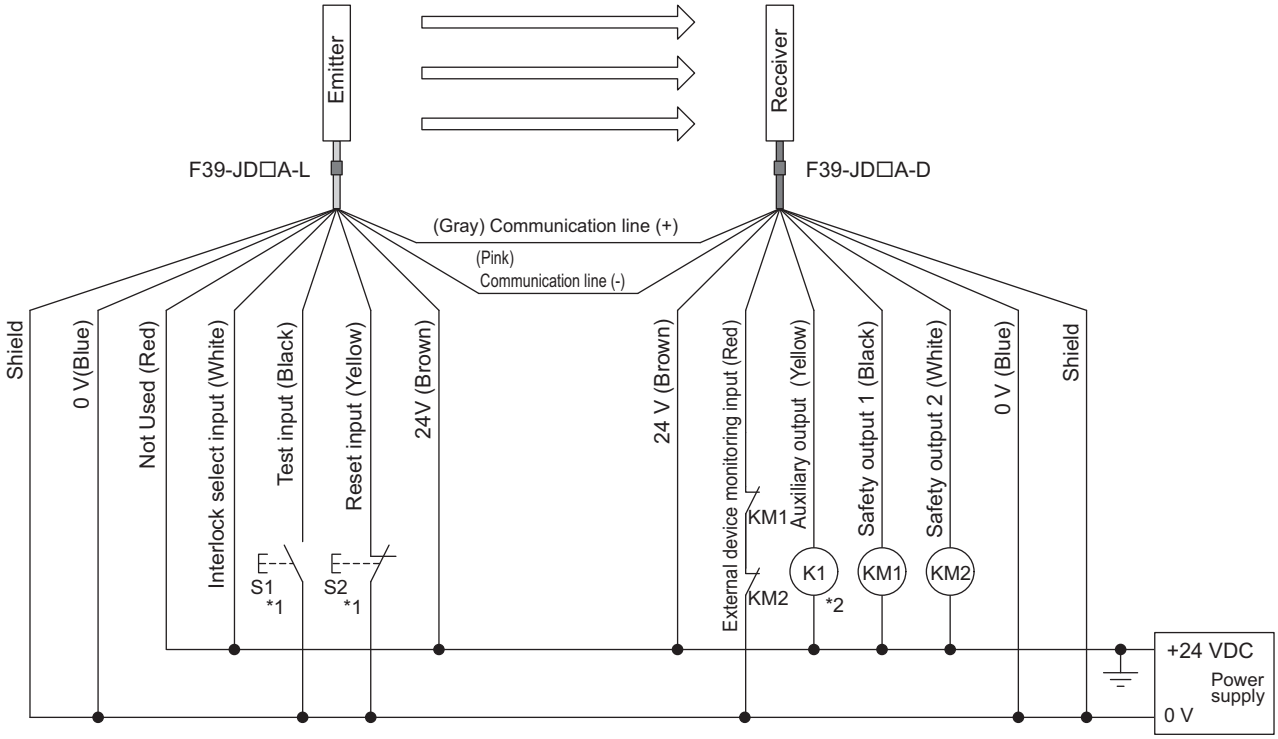

S1 : External test switch (connect to 24 V if a switch is not required)
S2 : Lockout reset switch (connect to 0 V if a switch is not required)
KM1, KM2 : Safety relay with force-guided contact (G7SA) or magnetic contactor
K1 : Load or PLC, etc. (for monitoring)

*1. Use a switch for small loads (input specifications: 24 V, 1.0 mA max.).
*2. F3SJ operates even when K1 is not connected.

■ Wiring for manual reset mode and deactivated external device monitoring function

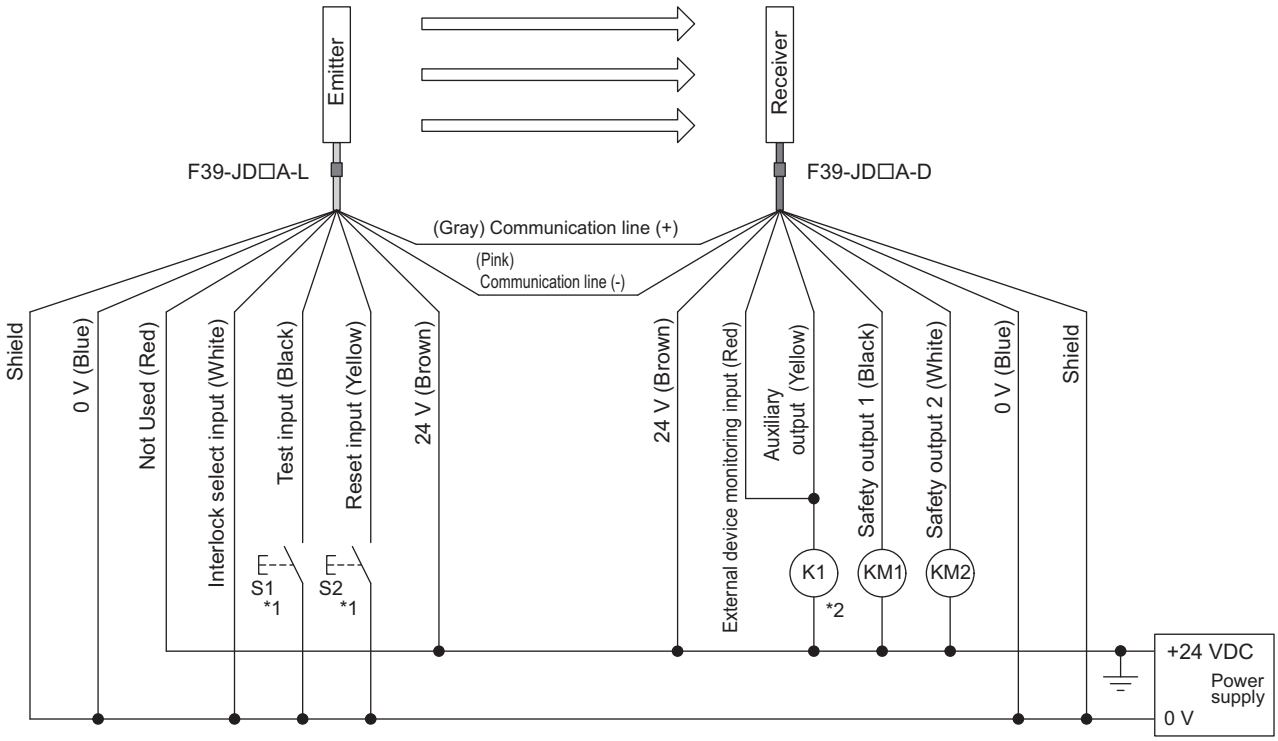

S1 : External test switch (connect to 24 V if a switch is not required)
S2 : Interlock/lockout reset switch
KM1, KM2 : Safety relay with force-guided contact (G7SA) or magnetic contactor
K1 : Load or PLC, etc. (for monitoring)

*1. Use a switch for small loads (input specifications: 24 V, 1.0 mA max.).
*2. F3SJ operates even when K1 is not connected.

■ Wiring for auto reset mode and deactivated external device monitoring function

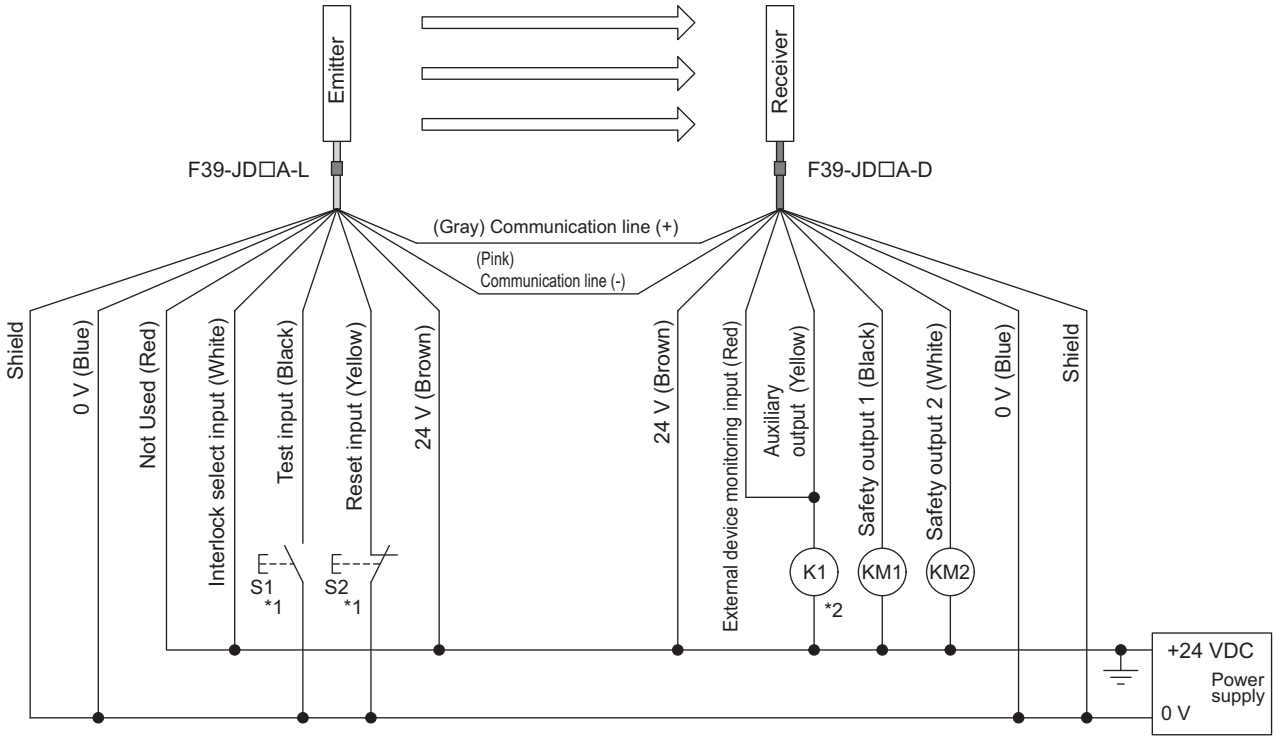

S1 : External test switch (connect to 24 V if a switch is not required)
S2 : Lockout reset switch (connect to 0 V if a switch is not required)
KM1, KM2 : Safety relay with force-guided contact (G7SA) or magnetic contactor
K1 : Load or PLC, etc. (for monitoring)

*1. Use a switch for small loads (input specifications: 24 V, 1.0 mA max.).
*2. F3SJ operates even when K1 is not connected.

Basic Type (Muting System)

■ Minimum wiring required to operate the F3SJ-B
(Wiring for auto reset mode)

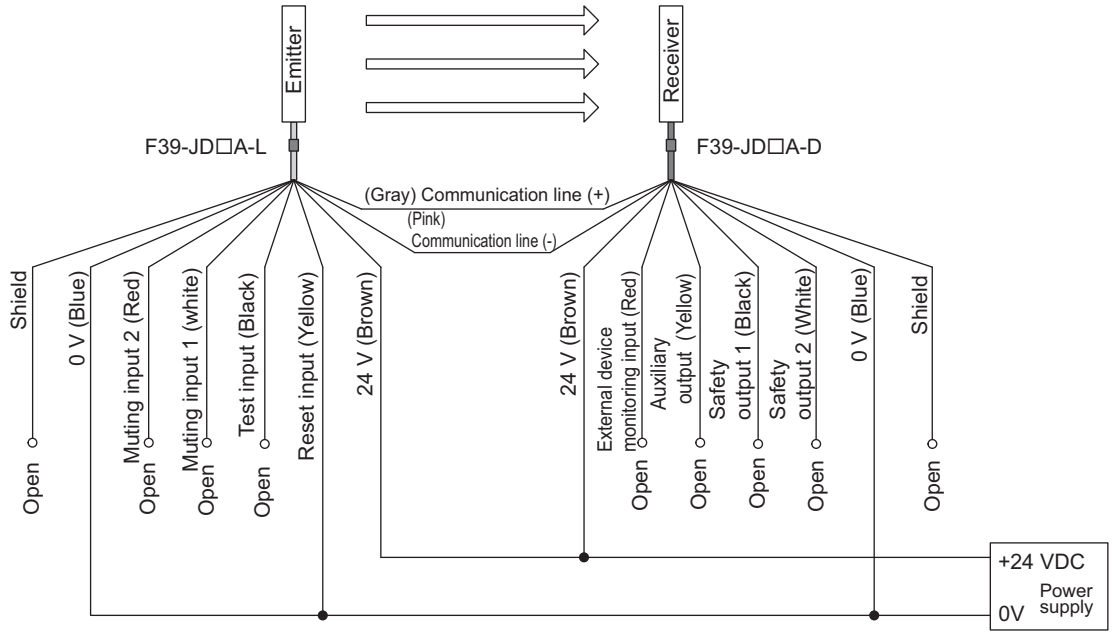

■ Wiring for muting function

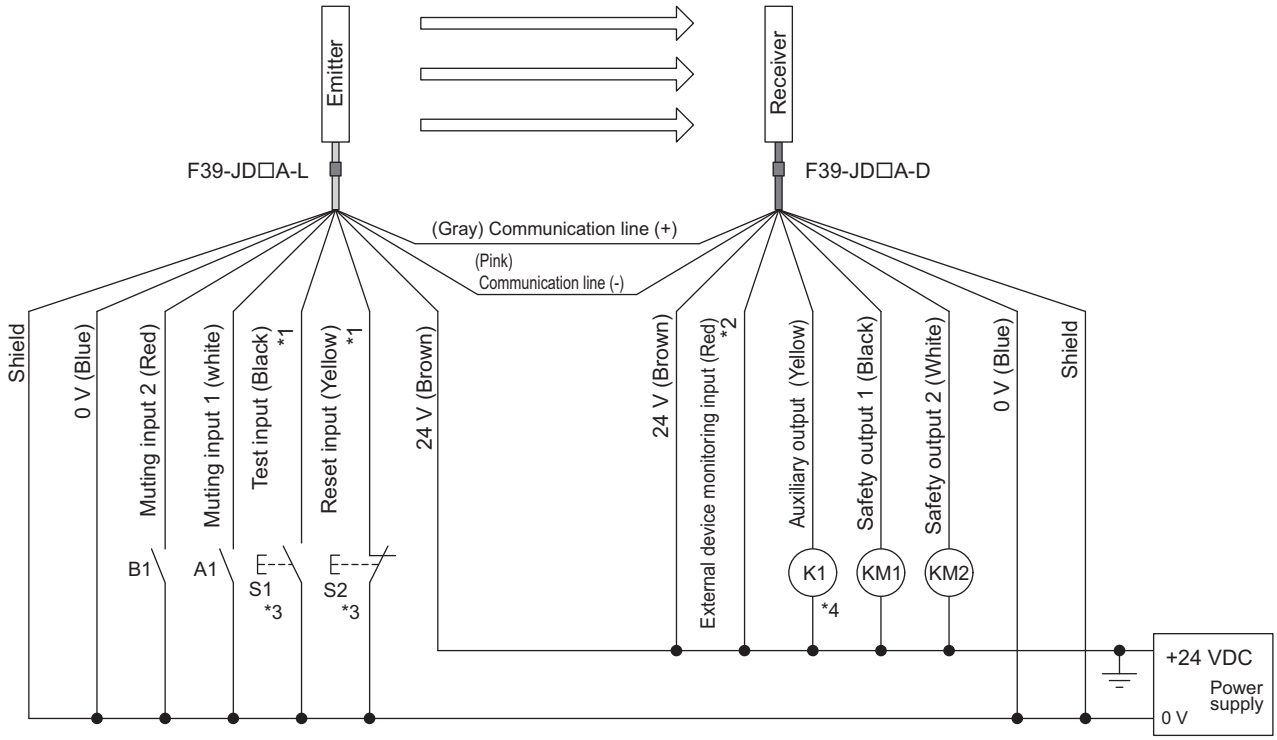

S1 : External test switch (connect to 24 V if a switch is not required)
S2 : Lockout reset switch (connect to 0 V if a switch is not required)
A1 : Contact by muting sensor A1
B1 : Contact by muting sensor B1
KM1, KM2 : Safety relay with force-guided contact (G7SA) or magnetic contactor
K1 : Indicator or PLC, etc. (for monitoring)

*1. Used as override input as well.
*2. When muting system is used, connect it to +24 V as the external device monitoring function cannot be used.
*3. Use a switch for small loads (input specifications: 24 V, 1.0 mA max.).
*4. F3SJ operates even when K1 is not connected.

Description of Functions

External Test Function

Easy Type	✓
Basic Type (basic system)	✓
Basic Type (muting system)	✓

This function stops the emission using an external signal. It can be used to verify that a safety system should properly stop (safety output turns OFF) when F3SJ-E/B is interrupted.
To stop the emission, apply 0 V to 3 V to the emitter's test input line.

■ Easy Type

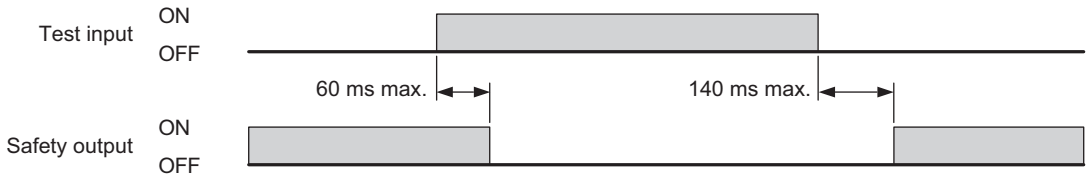

■ Basic Type (basic system)

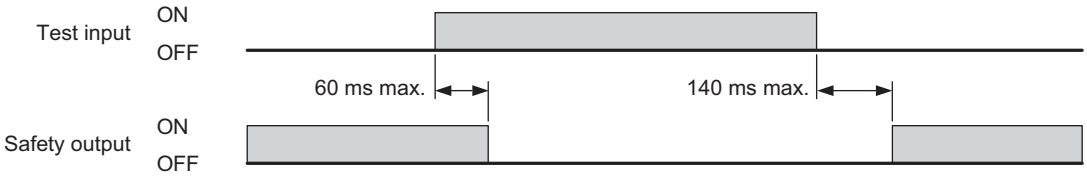

■ Basic Type (muting system)

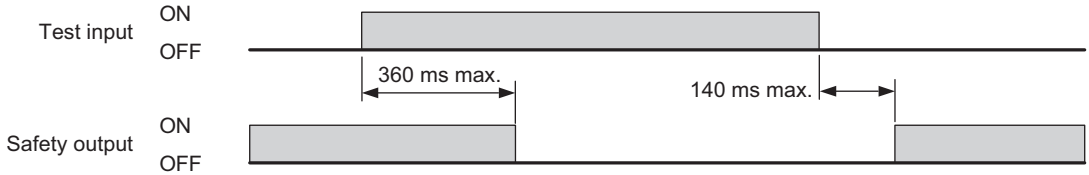

Self-test Function

Easy Type	✓
Basic Type (basic system)	✓
Basic Type (muting system)	✓

The F3SJ-E/B performs the self-test when power is turned ON (within 2 seconds) to check for errors. Also, it regularly performs the self-test (within a response time) while operating.
This function cannot be cancelled.

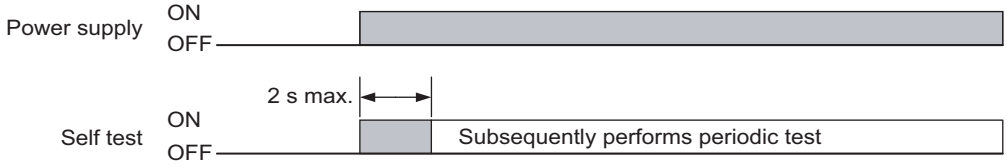

If an error is found in the self-test, the F3SJ-E/B enters lockout state, keeps the safety output in the OFF state, and indicates the error at the same time.

■ Self-test details

The self-test detects the types of errors described below.

Emitter
- Failure of emitter element or circuit
- CPU failure
- Disconnected or short-circuited cable

Receiver
- Abnormal external power supply voltage
- Failure of internal power supply circuit
- Failure of receiver element or detection circuit
- CPU failure
- Memory failure
- Incidence of disturbance light
- Failure of safety output circuit
- Disconnected or short-circuited cable

■ Waveform of safety outputs

When the F3SJ-E/B is receiving light, the safety outputs cyclically turn OFF as shown below to test the output circuit. When this OFF signal is fed back, the output circuit is diagnosed as normal. If the output signal does not include an OFF pulse signal due to short-circuit, etc, the receiver diagnoses a failure in the output circuit or wiring, and it enters lockout state.

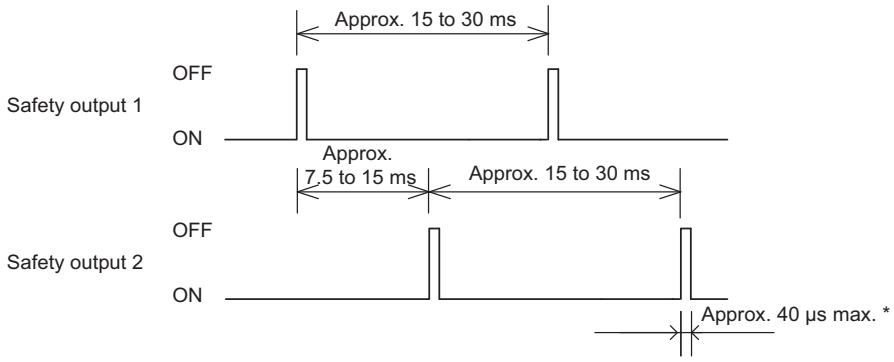

* An OFF pulse signal of safety output may extend to a maximum of about 100µs due to the effect of the connected load (mostly capacitive load).

Lockout Reset Function

Easy Type	✓
Basic Type (basic system)	✓
Basic Type (muting system)	✓

When the cause of the lockout is removed, you can release the lockout by using either of the following methods. *1

•Cycle the power back ON

•Reset input

Resetting methods differ as follows depending on the system used.

System	Lockout reset
Easy Type	Apply a voltage of 0 V to 3 V to the test input line (black) for 1 s or longer, and then open the input line or apply 1/2 Vs to Vs again.
Basic Type (basic system) Manual reset	Apply a voltage of 0 V to 3 V to the reset input line (yellow) for 1 s or longer, and then open the input line or apply 1/2 Vs to Vs again.
Basic Type (basic system) Auto reset	Open or apply 1/2 Vs to Vs to the reset input line (yellow) for 1 s or longer, and then apply a voltage of 0 V to 3 V again.
Basic Type (muting system)	

*1. When there is an input wiring error at startup, a lockout reset does not work. Fix the wiring error and then turn ON the power again.

Interlock Function

Easy Type	
Basic Type (basic system)	✓
Basic Type (muting system)	

The F3SJ-B turns the safety outputs OFF when its power is turned on or its beam is interrupted and holds this state until reset input is applied. This state is called "interlock".
Two methods can be used to reset the interlock state: "auto reset" and "manual reset." "Auto reset" automatically turns safety outputs ON when the interrupting object is removed. "Manual reset" keeps safety outputs OFF until a reset signal is provided, if the interrupting object is removed.

■ Auto reset

When the interrupting object is removed from the detection zone, the safety outputs automatically turn ON. Auto reset is used on machines where a worker is not able to enter the area between the detection zone and the hazardous part of the machine.

- Wiring for auto reset mode and external device monitoring function p.15
- Wiring for auto reset mode and deactivated external device monitoring function p.16

■ Manual reset

When a reset input is given while no interrupting object exists in a detection zone, the safety outputs turn ON. This allows the machine to be manually reset using a reset switch after ensuring safety, preventing unexpected startup (EN 1037).

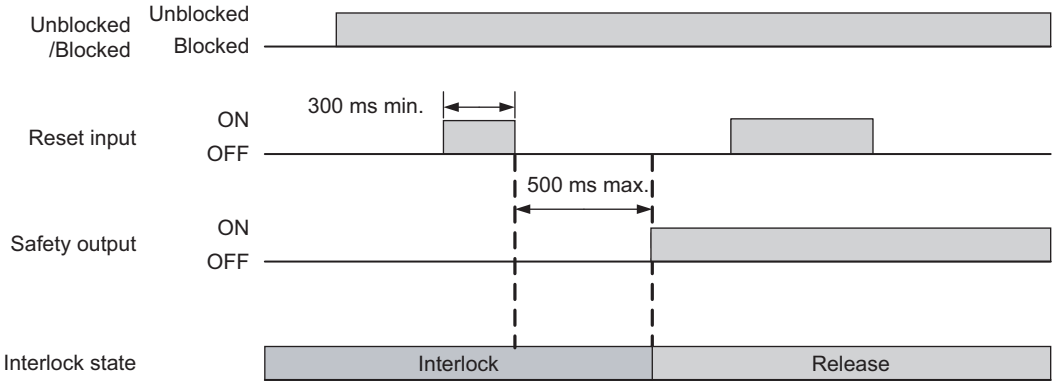

There are two types of interlock as follows:

•The power is turned ON (start interlock).This is useful if you want to keep the machine stopped until start inspection is completed after the power is turned ON.

•The F3SJ-B is blocked (restart interlock). After the F3SJ-B is blocked and the machine stops, manual reset is effective when you want to restart the machine after an operator confirms a safe condition.

- Wiring when using manual reset mode and external device monitoring p.14
- Wiring for manual reset mode and deactivated external device monitoring function p.15

To reset:

1. After applying a voltage of 0 V to 3 V for 300 ms or longer to the reset input line, set it to open or to 1/2 Vs to Vs.

⚠ WARNING

Install the interlock reset switch in a location that provides a clear view of the entire hazardous zone and where it cannot be activated from within the hazardous zone.

Auxiliary Output Function

Easy Type	
Basic Type (basic system)	✓
Basic Type (muting system)	✓

The auxiliary output is used to monitor the status of the F3SJ-B. This output can be connected to a device such as programmable controller.

⚠ WARNING

Do not use the auxiliary output for safety applications.
Human body may not be detected when F3SJ-B fails, resulting in serious injury.

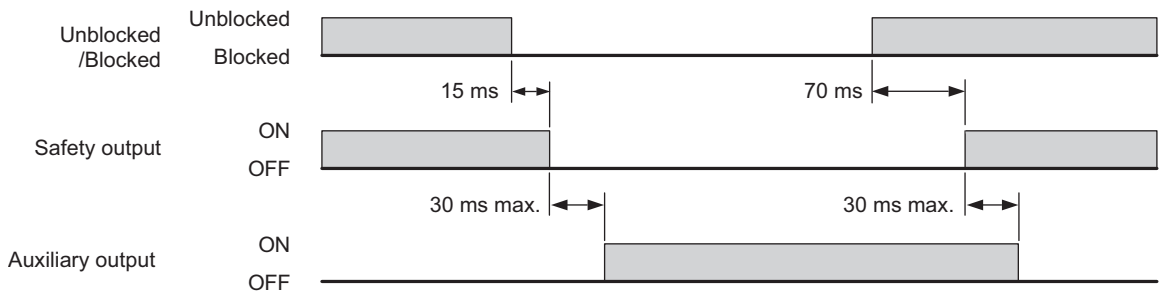

For details on operations when muting function is used, see the timing chart on page 26 .

External Device Monitoring Function

Easy Type	
Basic Type (basic system)	✓
Basic Type (muting system)	

The external device monitoring function cannot be used when the muting system is used.
This function detects malfunctions, such as welding, in external relays (or contactors) that control the hazardous part of a machine.
This function constantly monitors that a specified voltage is applied to the receiver's external device monitoring input line, and the system enters lockout state when an error occurs. The relay's operational delay can be up to 0.3 s without being evaluated as an error.
For example, if the normally closed N.C. contact does not close within 0.3 s after the safety outputs turn from ON to OFF, and a specified voltage is not applied to the external device monitoring line , it is evaluated as an error and the system enters a lockout state.
To utilize this function properly, use safety relays and contactors that have force guided or mechanically linked contact structure.

■ Wiring

Perform wiring so that a voltage of 0 V to 3 V is applied to the external device monitoring line via the external relay's normally closed N.C. contact.
When external device monitoring is not being used, apply the auxiliary output to the external device monitoring input.

Wiring for external device monitoring function p.14

■ Timing chart

The sensor reads out a device monitoring input value a minimum of 0.5 s after the power of the F3SJ-B is turned ON. If the status of the safety outputs is changed back to the original status within the allowable delay time, the F3SJ-B will not enter the lockout state.

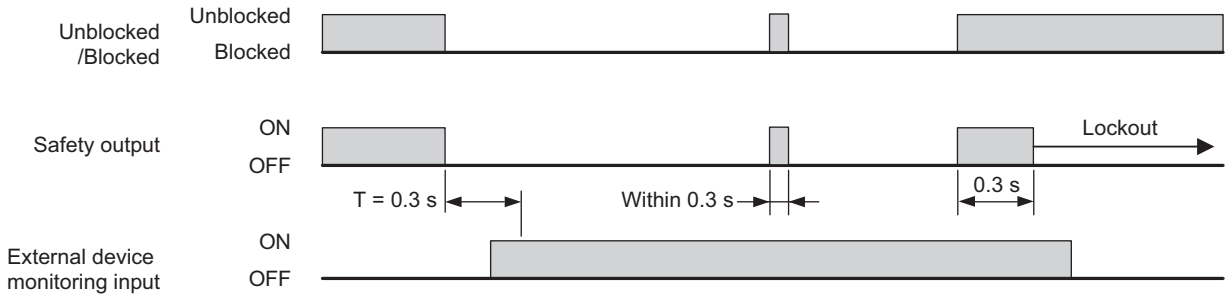

Muting Function

Easy Type	
Basic Type (basic system)	
Basic Type (muting system)	✓

Muting function temporarily disables safety function of the F3SJ-B, keeping safety output ON even if beams are interrupted. This makes it possible to install safety light curtains for AGV passage, enabling both safety and productivity. When muting, the top-beam-state indicator (TOP), bottom-beam-state indicator (BTM) and external indicator (if wired) connected to the auxiliary output blink to notify people in the surrounding zone that the safety functions are disabled.

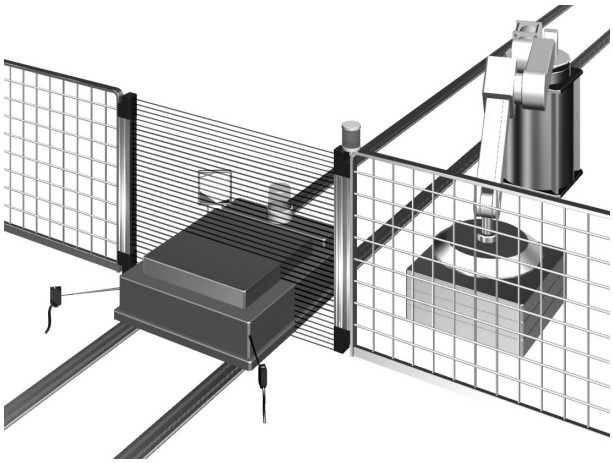

⚠ WARNING

The muting and override functions disable the safety functions of the device. You must ensure safety using other method when these functions are operating.

Install muting sensors so that they can distinguish between the object that is being allowed to be passed through the detection zone and a person.
If the muting function is activated by the detection of a person, it may result in serious injury.

■ Upgrading F3SJ-B for muting system

Loosen two cap screws (M3 cross-shaped) of either an emitter or a receiver to remove the cap. Replace the Cap with a Muting Key Cap and then tighten it with two screws (M3 cross-shaped).

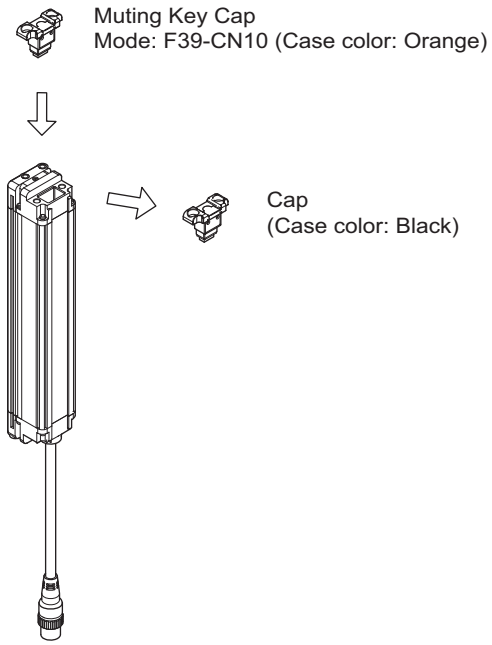

CHECK!

- When mounting a Cap or Muting Key Cap, securely tighten the screw (M3 cross-shaped) with the recommended torque of 0.54 N•m. Failure to do so may cause the cap to come loose, leading to deterioration of the protective functions.
- Attaching/detaching of a Cap or Muting Key Cap may cause misalignment of rubber grommet in a connector assembly. Press the grommet to the bottom of the connector and attach the connector to the F3SJ-B again.

<Muting sensor>

The muting sensor is the sensor that is the trigger for temporarily disabling the safety functions of the F3SJ-B. You can use a photoelectric switch of transmission type or reflective type proximity switch, or limit switch. (Recommendation: OMRON E3Z series, E2E series (3-wire type), D4N series) Use a 3-wire type NPN output or N.O. type contact. Two-wire type sensor cannot be used.

<Muting lamp>

You may need a muting lamp depending on your application or as a result of a risk assessment. Before determining the use of the muting lamp, check laws and regulations of the country or region where the F3SJ-B is used and make sure of full compliance with them.
The muting lamp can be connected to the auxiliary output.

<Internal indicators of the F3SJ-B>

Top-beam-state indicator	Blinks during muting/override.
Bottom-beam-state indicator	
Muting error indicator	Blinks during a muting error.
Muting input 1 indicator	Turns ON when an input is given to muting input 1.
Muting input 2 indicator	Turns ON when an input is given to muting input 2.

■ Using muting function

Turning muting inputs 1 and 2 ON sequentially enables muting function.

When a muting lamp is required as a result of a risk assessment, connect a muting lamp to the auxiliary output line.

<Start conditions>

If both of the following conditions are present for the F3SJ-B, muting is activated.

1. No interrupting object is found in the F3SJ-B's detection zone, and safety output is ON.
2. After muting input 1 is turned ON (connected to 0 V to 3 V), muting input 2 is turned ON (connected to 0 V to 3 V) within the muting input time limit of T1min to T1max (0.1 to 3 s).

Muting function can be enabled in up to 0.15 s after condition 2 is satisfied. When condition 1 is satisfied but time condition of 2 is not, a muting sequence error occurs and emitter's muting error indicator blinks. However, when there is a muting error, the F3SJ-B safety function operates and normal operation continues.

For muting error indication, see page 117 .

Muting error can be released by any of following conditions:

1. Correct muting initial condition continues for 0.1 s or longer. *1
2. Power cycle under muting input 1 and 2 OFF state.

*1. The correct initial muting condition is shown as follows.

- Safety output of the light curtain is ON.
- Muting input 1 and 2 are OFF.

<End conditions>

If either of the following conditions is satisfied, the muting state is released.

1. Muting input 1 or 2 turns OFF for T3 (0.1 s) or longer.
2. The muting continuation time exceeds the muting time limit of T2 (60 s).

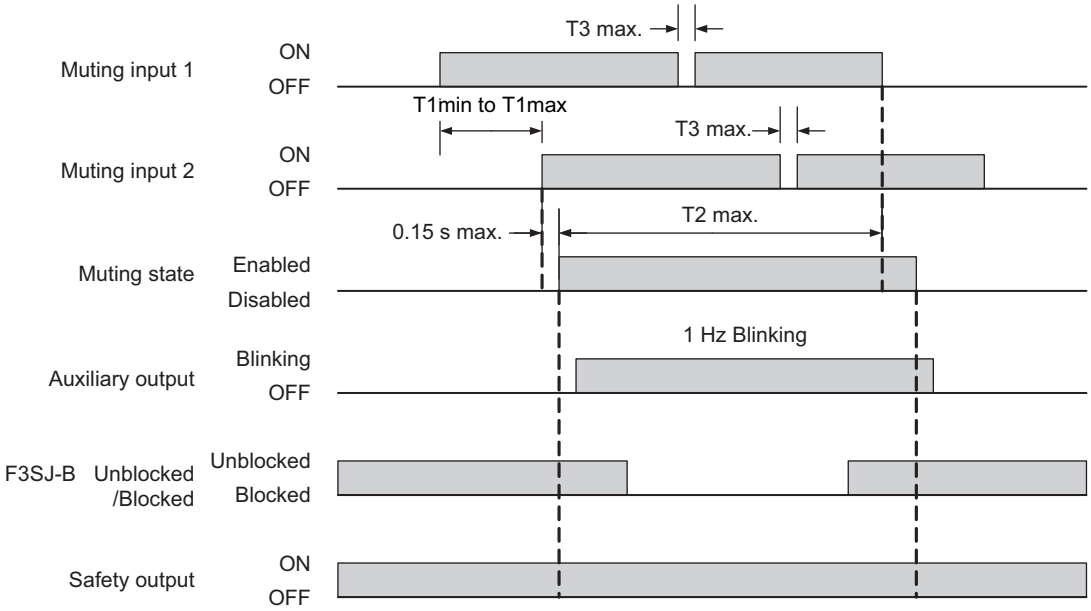

Variable	Variable name	Value	Description
T_{1min}	Muting input time limit value (minimum)	0.1 s	Minimum time difference between muting inputs 1 and 2. If the time difference between muting inputs 1 and 2 is smaller than this value, a muting error occurs.
T_{1max}	Muting input time limit value (maximum)	3 s	Maximum time difference between muting inputs 1 and 2. If the time difference between muting inputs 1 and 2 is larger than this value, a muting error occurs.
T_2	Muting time limit	60 s	This is the muting function continuation time. If muting state exceeds this time, the function is canceled.
T_3	Maximum muting input pulse duration	0.1 s	Maximum muting input time with allowable waveform cracks in muting input 1 and 2.

CHECK! Muting state can be also released when the sensor enters lockout.

■ Installation standard for muting sensors

- Set the muting sensors so that they can detect all of the passing detection objects (palettes, automobiles, etc.). Do not install in a position so that only the front or rear end of the detection object is detected.
- Set the muting sensors so that they detect the objects even when they are loaded on palettes or other transport devices.
- Also, install the F3SJ-B and muting sensors so that each object passes through all muting sensors before the next object arrives at the first muting sensor. Also, install all F3SJ-Bs and muting sensors so that no person is able to accidentally enter the hazardous zone while the muting function is enabled.
- If objects' speeds can vary, the allocation of muting sensors must be taken into consideration.
- Install muting sensors so that they can distinguish between the object that is being allowed to be passed through the detection zone and a person.

■ Installation example 1 of standard muting mode (Using two muting sensors)

This is an example of two retro-reflective type photoelectric sensors used as muting sensors installed in a cross pattern.

Use two sensors when the length L of the workpieces are not constant or are insufficient.

1. Before a workpiece passes through

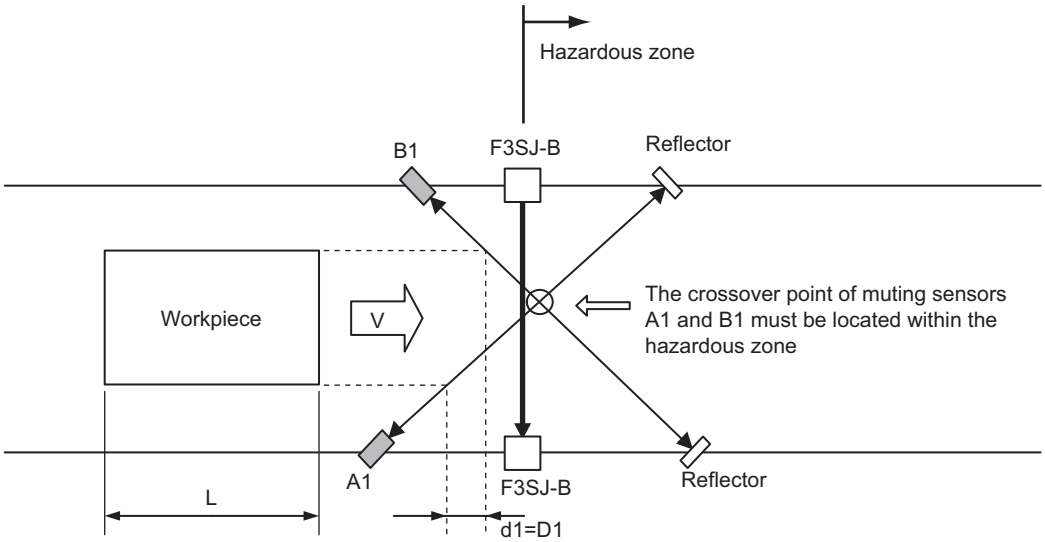

L: Length of workpiece
d1: Maximum distance required for the muting sensor to keep the muting function enabled
D1: Minimum distance required for the muting sensor to keep the muting function enabled

The output state of muting sensors A1 and B1 are both OFF (contacts A1 and B1 are open due to muting output), and the safety function of the F3SJ-B is working.

In this example where two muting sensors are used, the crossover point of muting sensors A1 and B1 is in the hazardous zone. This configuration prevents the muting function from being enabled by a person passing through the crossover point.

2. Muting function started working

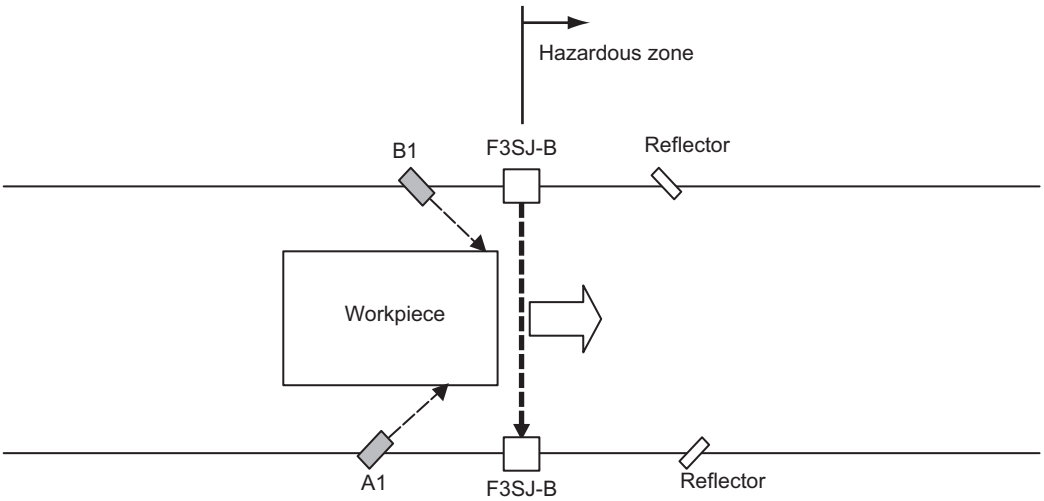

When muting sensors A1 and B1 are turned ON in this order, the muting function is enabled. In this state, the safety function of F3SJ-B is disabled.

3. Muting function is working

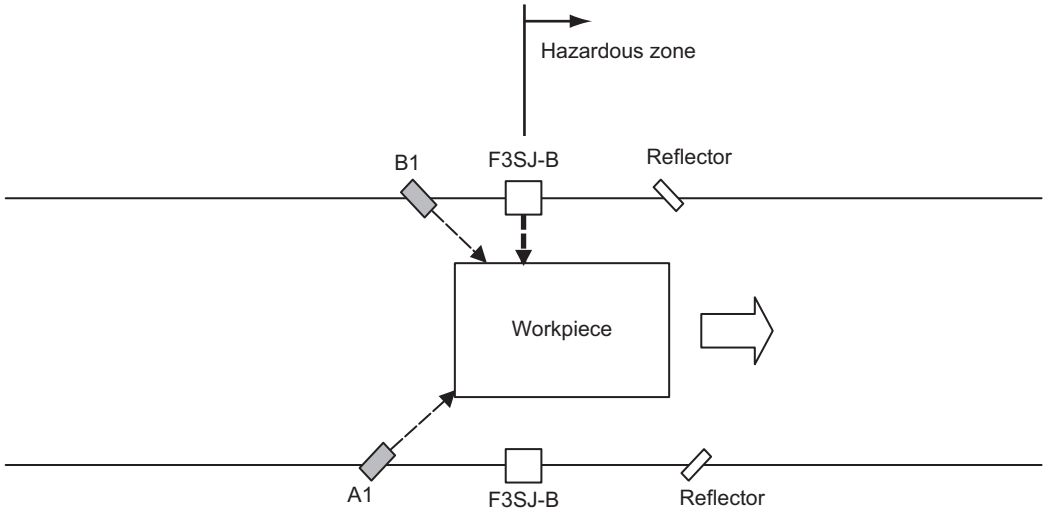

The F3SJ-B is blocked but the safety function is disabled by the muting function, and safety outputs 1 and 2 are turned ON.

4. The muting function is released

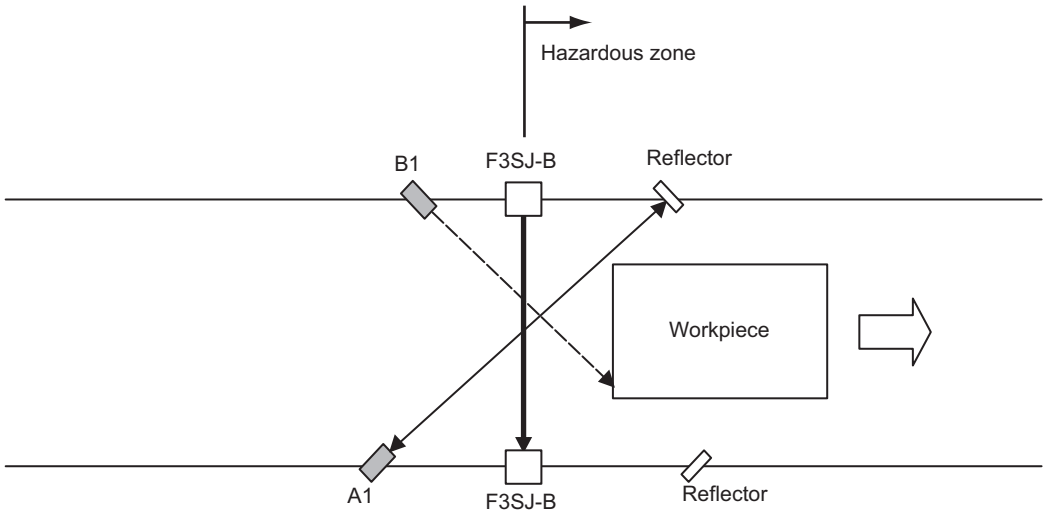

Muting sensor A1 is turned OFF, the muting function is released, and the safety function of the F3SJ-B is enabled.

<Installation distance>

The minimum distance, D1 [m], required for muting sensors to keep the muting function enabled is :

D1 < L . . . . . Formula (1)
L [m]: Length of a workpiece

The maximum distance, d1 [m], required for muting sensors to keep the muting function enabled is :

V x T1min < d1 < V x T1max . . . . . Formula (2)
V [m/s] : Approach speed of a workpiece
T1min [s] : Muting input time limit value (minimum). It is set as 0.1 s.
T1max [s] : Muting input time limit value (maximum). It is set as 3 s.

To enable the muting function, D1 and d1 must satisfy formulas (1) and (2), respectively.
This distance must prevent the muting function from being enabled by a person passing through the muting sensors.
Also, install the F3SJ-B and muting sensors so that each workpiece passes through all muting sensors before the next workpiece arrives at the first muting sensor.

<Wiring diagram>

Using a photoelectric switch as a muting sensor

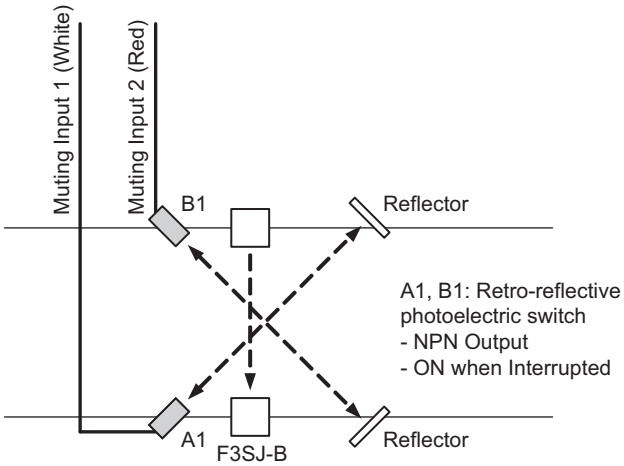

Using an N.O contact type switch as a muting sensor

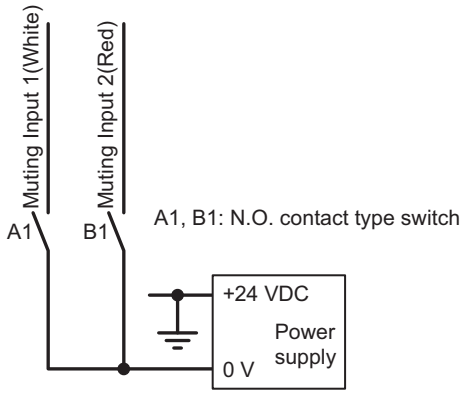

* Two-wire type muting sensor cannot be used.

<Timing chart>

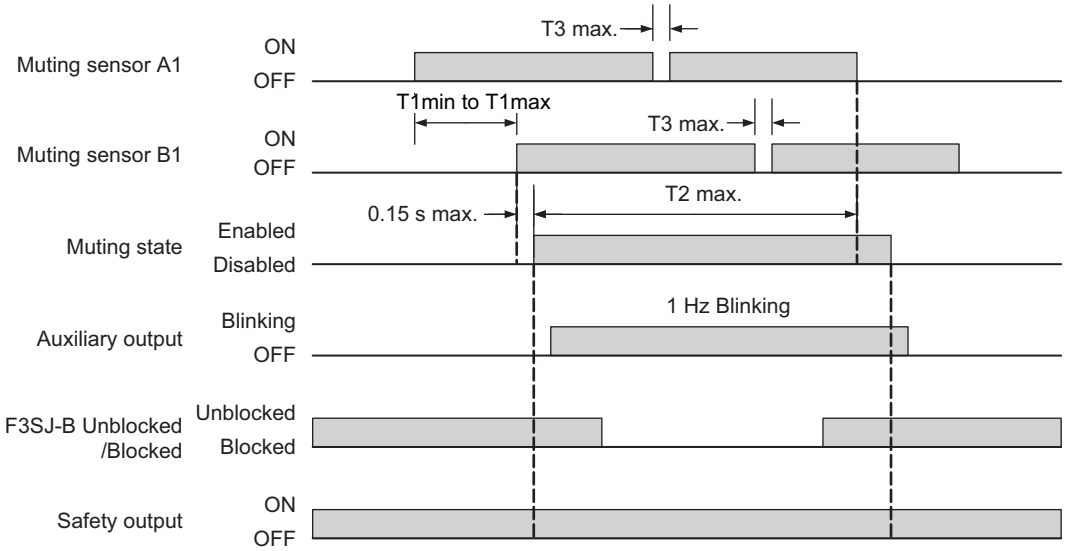

Variable	Variable name	Value	Description
T1min	Muting input time limit value (minimum)	0.1 s	Minimum time difference between muting inputs 1 and 2. If the time difference between muting inputs 1 and 2 is smaller than this value, a muting error occurs.
T1max	Muting input time limit value (maximum)	3 s	Maximum time difference between muting inputs 1 and 2. If the time difference between muting inputs 1 and 2 is larger than this value, a muting error occurs.
T2	Muting time limit	60 s	This is the muting function continuation time. If muting state exceeds this time, the function is canceled.
T3	Maximum muting input pulse duration	0.1 s	Maximum muting input time with allowable waveform cracks in muting input 1 and 2.

■ Installation example 2 of standard muting mode (Using four muting sensors)

This installation example uses four through-beam type photoelectric sensors as muting sensors.
The use of four muting sensors is useful when the length of the workpieces is constant or longer, and the entrance and exit have enough space. Muting can be performed from both directions in the arrangement as shown below.

1. Before a workpiece passes through

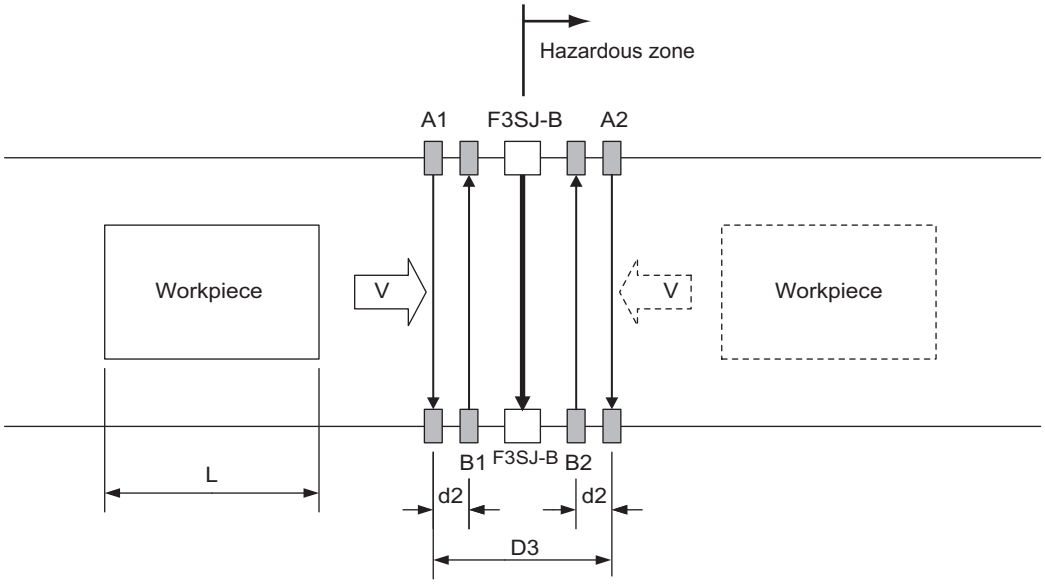

d2: Maximum distances required for the muting sensor to keep the muting function enabled
D3: Minimum distance required for the muting sensor to keep the muting function enabled

All muting sensors are turned OFF and the safety function of the F3SJ-B is working.

2. The muting sensor is blocked and the safety function of the F3SJ-B is disabled

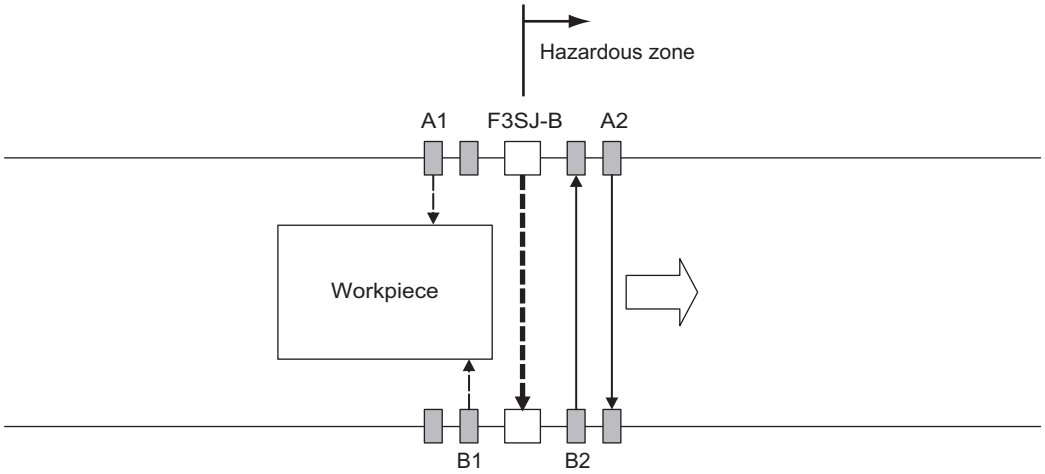

When muting sensors A1 and B1 are turned ON in this order, the muting function is enabled. In this state, the safety function of F3SJ-B is disabled.

3. The muting sensor is blocked and the safety function of the F3SJ-B is disabled

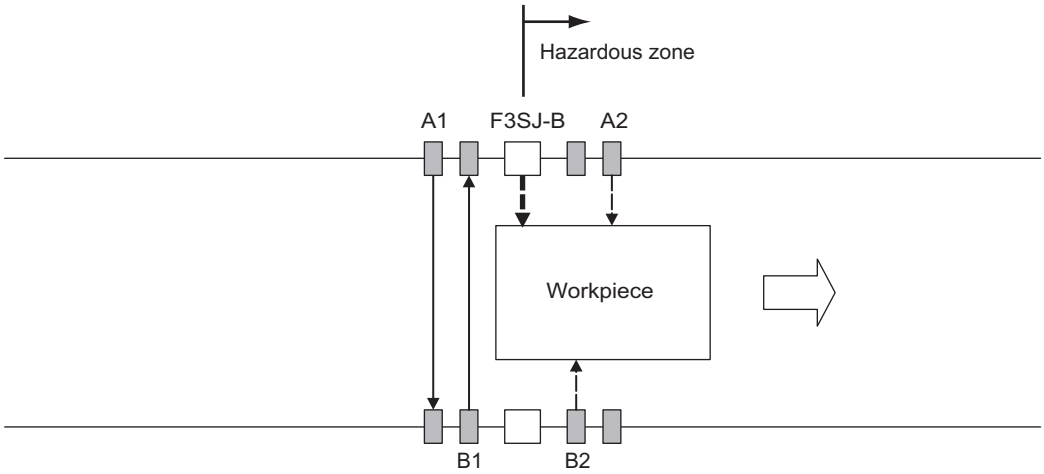

Muting sensors A1 and B1 are turned OFF but A2 and B2 are ON, so the muting function is still working. Safety outputs 1 and 2 are turned ON.

4. The muting function is released

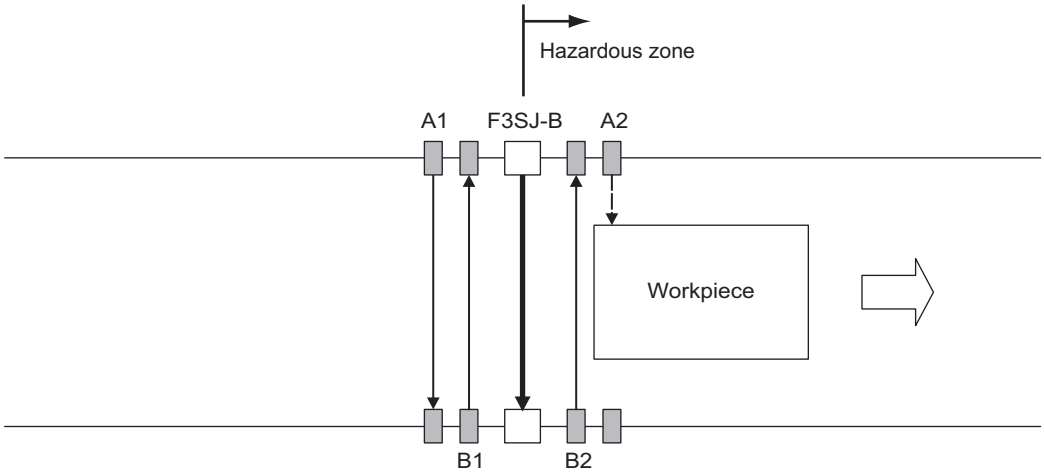

Muting sensor B2 is turned OFF, the muting function is released, and the safety function of the F3SJ-B is enabled.

<Installation distance>

The minimum distance, D3 [m], required for muting sensors to keep the muting function enabled is :

D3 < L . . . . . Formula (3)
L [m]: Length of a workpiece

The maximum distance, d2 [m], required for muting sensors to keep the muting function enabled is :

V x T1min < d2 < V x T1max . . . . . Formula (4)
V [m/s] : Approach speed of a workpiece
T1min [s] : Muting input time limit value (minimum). It is set as 0.1 s.
T1max [s] : Muting input time limit value (maximum). It is set as 3 s.

To enable the muting function, D3 and d2 must satisfy formulas (3) and (4), respectively.
This distance must prevent the muting function from being enabled by a person passing through the muting sensors. Also, install the F3SJ-B and muting sensors so that each workpiece passes through all muting sensors before the next workpiece arrives at the first muting sensor.

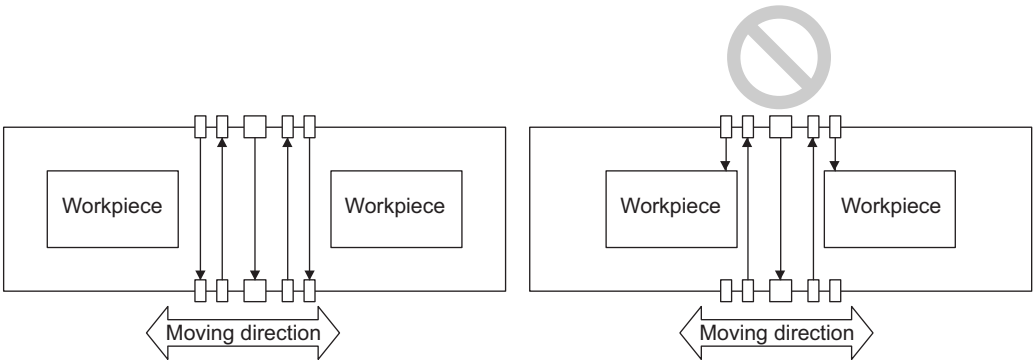

<Wiring diagram>

Using a photoelectric switch as a muting sensor

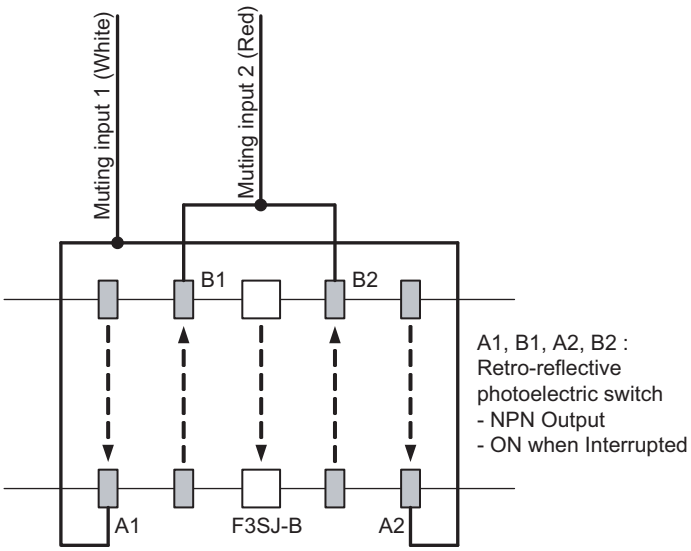

Using an N.O. contact type switch as a muting sensor

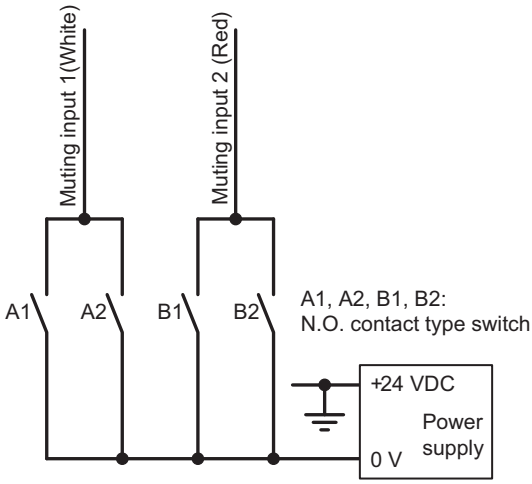

* Two-wire type muting sensor cannot be used.

<Timing chart>

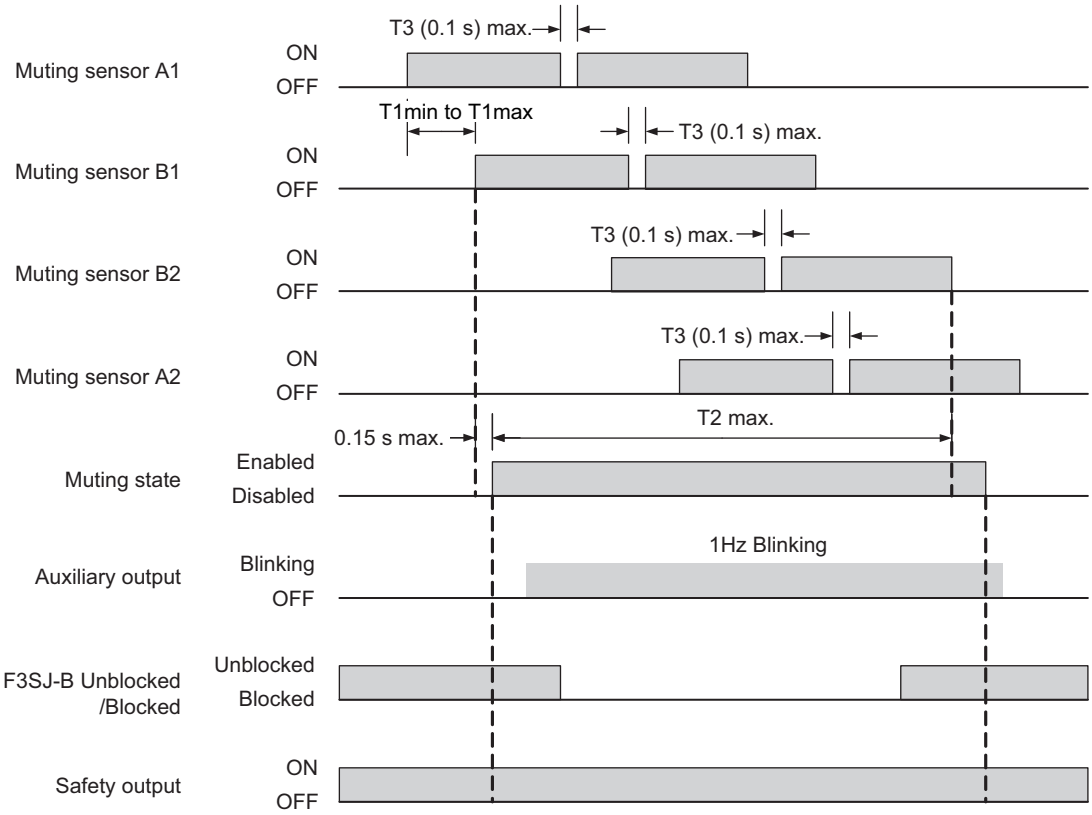

Variable	Variable name	Value	Description
T1min	Muting input time limit value (minimum)	0.1 s	Minimum time difference between muting inputs 1 and 2. If the time difference between muting inputs 1 and 2 is smaller than this value, a muting error occurs.
T1max	Muting input time limit value (maximum)	3 s	Maximum time difference between muting inputs 1 and 2. If the time difference between muting inputs 1 and 2 is larger than this value, a muting error occurs.
T2	Muting time limit	60 s	This is the muting function continuation time. If muting state exceeds this time, the function is canceled.
T3	Maximum muting input pulse duration	0.1 s	Maximum muting input time with allowable waveform cracks in muting input 1 and 2.

<Reference: Preventing light interference of muting sensor>

When a photoelectric sensor is used as a muting sensor, light interference may cause a muting error of F3SJ-B.

The cause and measures for light interference are shown as follows:

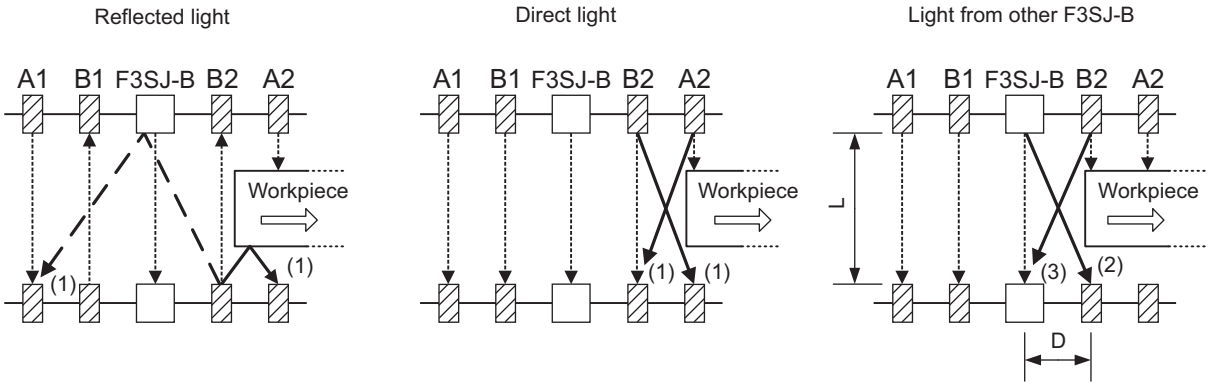

(1) Interference between muting sensors

- Use sensors with mutual interference prevention (such as retro-reflective E3Z-R□□ series)
- Use laser-type sensors (such as laser-type E3Z-LR□ series)
- Take distance from a sensor causing the interference
- Displace beams for each other to prevent interference (change installation height or place them crosswise)
- Install a physical barrier
- Attach interference prevention filter (provided for E3Z series as accessories)
- Attach a slit to reduce light intensity (provided for E3Z series as accessories)
- Lower the sensitivity
- Reduce a distance between a workpiece and a muting sensor to prevent reflected light from a workpiece

(2) Interference to a muting sensor from F3SJ-B
- Take distance (D) from a sensor causing the interference
- Displace beams for each other to prevent interference (change installation height or place them crosswise)
- Install a physical barrier
- Arrange sensors in alternation
- Lower the sensitivity

(3) Interference to F3SJ-B from a muting sensor
- Use a red LED type sensor (such as retro-reflective E3Z-R□□ series)
- Use laser-type sensors (such as laser-type E3Z-LR□ series)
- Take distance (D) from a sensor causing the interference
- Displace beams for each other to prevent interference (change installation height or place them crosswise)
- Install a physical barrier
- Arrange sensors in alternation
- Attach a slit to reduce light intensity (provided for E3Z series as accessories)

Mutual interference between a muting sensor and F3SJ-B in (2) and (3) above can be prevented by configuring D satisfying a formula shown below:

•If L = 0.2 to 3 m D = 0.26 m or larger
•If L = 3 m or larger D = L x tan5° = L x 0.088 m or larger

L : Distance between an emitter and a receiver of the F3SJ-B
D : Distance between a muting sensor and a F3SJ-B

Override Function

Easy Type	
Basic Type (basic system)	
Basic Type (muting system)	✓

The override function turns the safety outputs ON when the muting start condition is not satisfied. If a workpiece stops while passing through the F3SJ-B, as shown below, causing a muting error, the normal state cannot be recovered unless the workpiece is removed from the muting sensors and the detection field of the F3SJ-B. However, the override function will mute the safety outputs of the F3SJ-B so that the conveyor can be restarted to move the workpiece out of the muting sensors and detection zone.

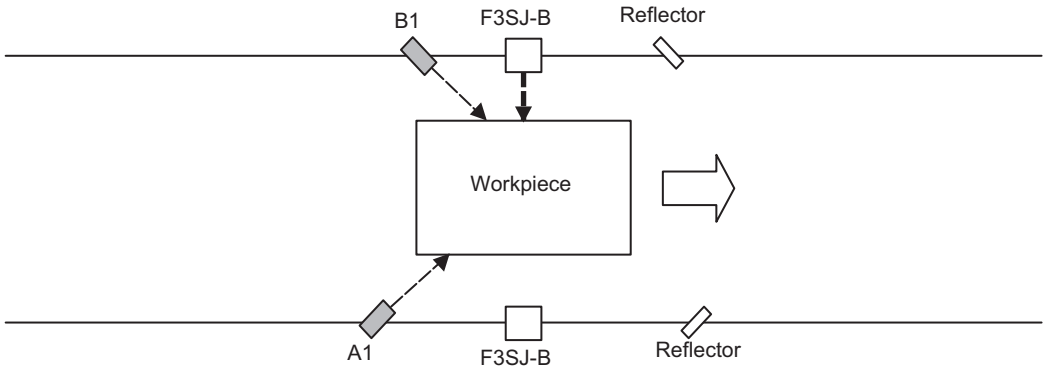

The override function can be enabled for up to 60 s.

⚠ WARNING

The muting and override functions disable the safety function of the device. You must ensure safety using other method when these functions are operating.

Install the switch that uses hold-to-run device such as a spring-return key switch. Install the switch in a location that provides a clear view of the entire hazardous zone and where it cannot be activated from within the hazardous zone. Make sure that nobody is in the hazardous zone before activating the override function.

■ Override start conditions

If all of the following conditions are present in the F3SJ-B, the override function starts. The override function can be put into effect even when there is a muting error.

1. If either muting input 1 or 2 is ON (One or more muting sensors are turned ON by a workpiece)
2. The F3SJ-B is blocked and the output is OFF
3. Under the conditions of 1 and 2 shown above, the reset input changes from ON to OFF and the test input changes from OFF to ON at the same time. The changing time of these two inputs must be 0.3 s max.

■ Override end conditions

When either of the following conditions is satisfied, the function is released.

•When 60 seconds has elapsed under the override status

•All muting sensors are turned OFF

•When the reset input is turns from OFF to ON and/or the test input turns from ON to OFF

CHECK! Override state can be also released when the sensor enters lockout.

<Timing chart>

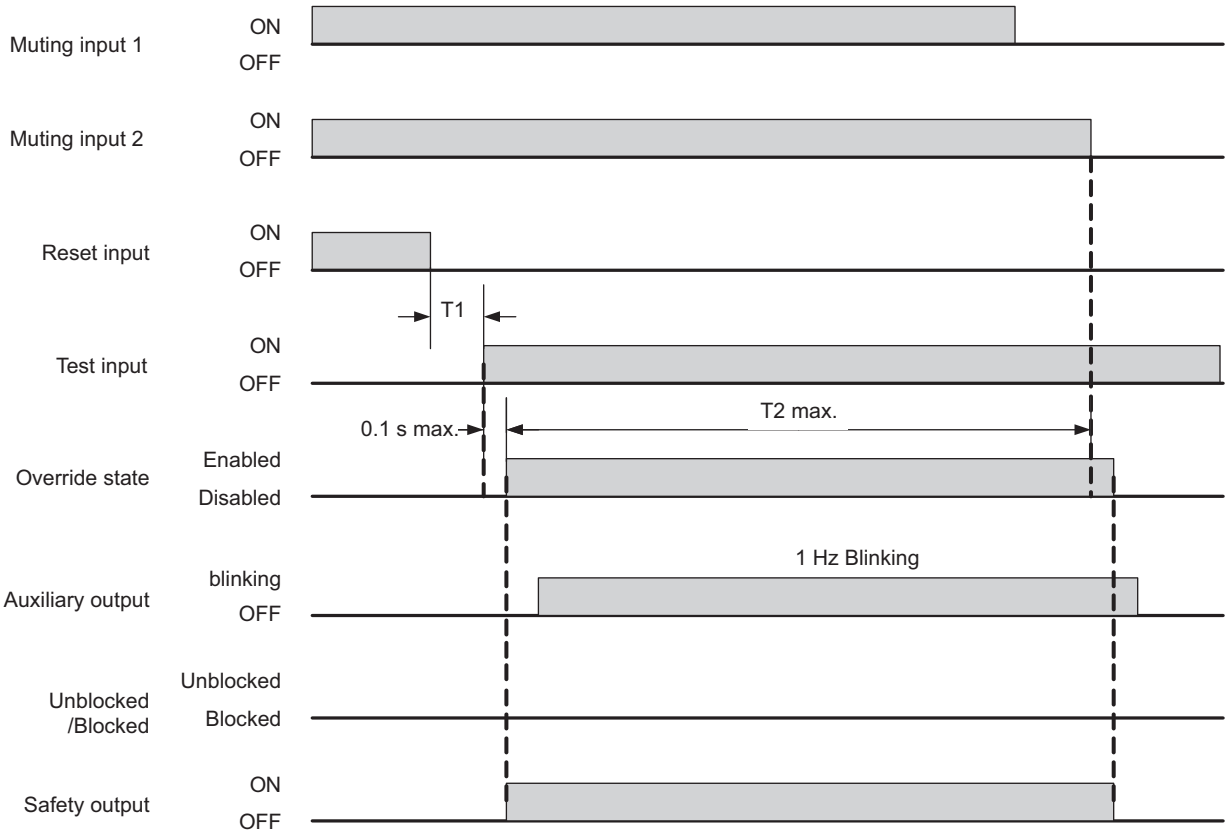

T1 : Override Input Time Limit : 0.3 s
T2 : Override Time Limit : 60 s

Chapter3 Wiring/Installation

Installation Conditions 40

- Detection Zone and Approach 40
- Safety Distance 41
- Distance from Reflective Surfaces 45
- Mutual Interference Prevention 45

Series Connection 47

- Connection Procedure 49

Dimensions 50

- Difference between Easy Type and Basic Type 50
- When Using Top/Bottom and Intermediate Brackets 51
- When Using Intermediate Brackets Only (Free-Location Mounting) 55
- When Using One-touch Brackets 59
- When Using Replacement Brackets 64
- When Using Contact Mount Brackets 67
- When Using Spatter Protection Cover 70

Mounting 71

- Mounting Method 71
- Number of Brackets Required 71
- Mounting Procedure 72

Wiring 86

- Wiring Precautions 86
- Power Supply Unit 87
- Wiring Method (Easy Type) 88
- Wiring Method (Basic Type) 88

Installation Conditions

Detection Zone and Approach

⚠ WARNING

Install a protective structure so that the hazardous part of a machine can only be reached by passing through the sensor's detection zone. Install the sensors so that part of the person is always present in the detection zone and no blind spot is generated when working in a machine's hazardous zones.
If a person is able to step into the hazardous zone of a machine and remain behind the F3SJ-E/B's detection zone, configure the system with an interlock function that prevents the machine from being restarted. Failure to do so may result in serious injury.

Do not use this sensor for machines that cannot be stopped by electrical control. For example, do not use it for a pressing machine that uses a full-rotation clutch. Otherwise, the machine may not stop before a person reaches the hazardous part, resulting in serious injury.

To use the F3SJ-E/B in PSDI mode (Reinitiation of cyclic operation by the protective equipment), you must configure an appropriate circuit between the F3SJ-E/B and the machine. For details about PSDI, refer to OSHA 1910.217, IEC 61496-1, and other relevant standards and regulations.

Install the interlock reset switch in a location that provides a clear view of the entire hazardous zone and where it cannot be activated from within the hazardous zone.

Do not use the F3SJ-E/B in environments where flammable or explosive gases are present. Doing so may cause an explosion.

The F3SJ-E/B cannot protect a person from a projectile exiting the hazardous zone. Install protective cover(s) or fence(s).

Make sure that the F3SJ-E/B is securely mounted and its cables and connectors are properly secured.

Correct installation

The hazardous zone of a machine can be reached only by passing through the sensor's detection zone.

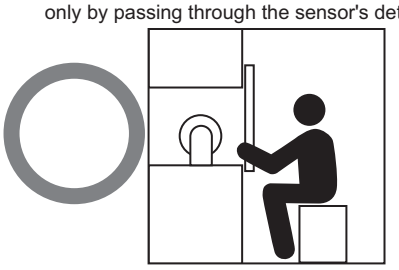

While working, a person is inside the sensor's detection zone.

Incorrect installation

It is possible to reach the hazardous zone of a machine without passing through the sensor's detection zone.

A person is between the sensor's detection zone and the hazardous zone of a machine.

Safety Distance

The safety distance is the distance that must be set between the F3SJ-E/B and a machine's hazardous part to stop the hazardous part before a person or object reaches it. The safety distance varies according to the standards of each country and the individual specifications of each machine. Always refer to relevant standards.

⚠ WARNING

Make sure to secure the safety distance (S) between the F3SJ-E/B and the hazardous part. Otherwise, the machine may not stop before a person reaches the hazardous part, resulting in serious injury.

CHECK!

The response time of a machine is the time period from when the machine receives a stop signal to when the machine's hazardous part stops. Measure the response time on the actual system. Also, periodically check to make sure that the response time of the machine has not changed.

■ How to calculate the safety distance specified by International Standard ISO 13855 (European Standard EN ISO 13855) (Reference)

<u>If a person approaches the detection zone of the F3SJ-E/B perpendicularly</u>

S = K x T + C . . . Formula (1)

•S: Safety distance
•K: Approach speed to the detection zone
•T: Total response time of the machine and F3SJ-E/B
•C: Additional distance calculated by the detection capability of the F3SJ-E/B

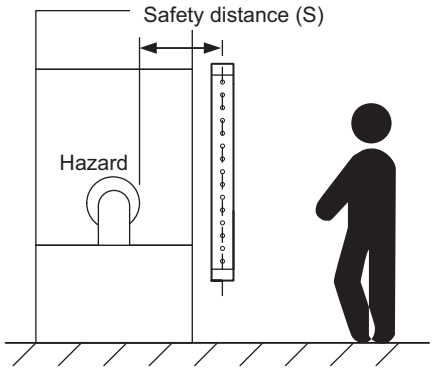

<System that has detection capability of 30 mm or less>

Use K = 2,000 mm/s and C = 8 x (d - 14 mm) in formula (1) for the calculation.

S = 2,000 mm/s x (Tm + Ts) + 8 x (d - 14 mm)

•S = Safety distance (mm)
•Tm = Machine's response time (s)
•Ts = Response time of the F3SJ-E/B from ON to OFF (s)
•d = Detection capability of the F3SJ-E/B (mm)

[Calculation example]

When Tm = 0.05 s, Ts = 0.015 s, and d = 25 mm:

S = 2,000 mm/s x (0.05 s + 0.015 s) + 8 x (25 mm - 14 mm)

= 218 mm

If the result is less than 100 mm, use S = 100 mm.

If the result exceeds 500 mm, use the following formula where K = 1,600 mm/s.

S = 1,600 mm/s x (Tm + Ts) + 8 x (d - 14 mm) . . . Formula (2)

If the result of this formula (2) is less than 500 mm, use S = 500 mm.

Possible circumventing by reaching over the detection zone

If access to the hazardous zone by reaching over the detection zone of vertically mounted F3SJ-E/B cannot be excluded, the height and the safety distance, S, of the F3SJ-E/B shall be determined. S shall be determined by comparison of the calculated values in Detection Zone Orthogonal to Direction of Approach. The greater value resulting from this comparison shall be applied.

S=(K × T) + Cro . . . Formula (5)

•S: Safety distance

•K: Approach speed to the detection zone

•T: Total response time of the machine and F3SJ-E/B

•Cro: Approach distance based on the distance which personnel can move towards the hazardous zone of a machine by reaching over the detection zone. The distance is determined in the table below based on the height of the hazardous zone, a, and the height of the upper edge of the detection zone, b.

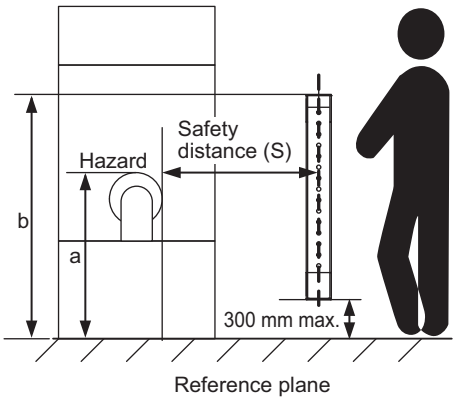

Note:Lower edge of the detection zone above 300 mm in relation to the reference plane does not offer sufficient protection against crawling below.

First, use K = 2,000 mm/s in formula (5) for the calculation. If the result of this calculation is less than 100 mm, use S = 100 mm.

If the result exceeds 500 mm, use K = 1,600 mm/s to recalculate it. If the result of the recalculation is less than 500 mm, use S = 500 mm.

Height of hazardous zone, a	Height of upper edge of detection zone, b											
	900	1000	1100	1200	1300	1400	1600	1800	2000	2200	2400	2600
	Additional distance to hazardous zone, Cro											
2600	0	0	0	0	0	0	0	0	0	0	0	0
2500	400	400	350	300	300	300	300	300	250	150	100	0
2400	550	550	550	500	450	450	400	400	300	250	100	0
2200	800	750	750	700	650	650	600	550	400	250	0	0
2000	950	950	850	850	800	750	700	550	400	0	0	0
1800	1100	1100	950	950	850	800	750	550	0	0	0	0
1600	1150	1150	1100	1000	900	850	750	450	0	0	0	0
1400	1200	1200	1100	1000	900	850	650	0	0	0	0	0
1200	1200	1200	1100	1000	850	800	0	0	0	0	0	0
1000	1200	1150	1050	950	750	700	0	0	0	0	0	0
800	1150	1050	950	800	500	450	0	0	0	0	0	0
600	1050	950	750	550	0	0	0	0	0	0	0	0
400	900	700	0	0	0	0	0	0	0	0	0	0
200	600	0	0	0	0	0	0	0	0	0	0	0
0	0	0	0	0	0	0	0	0	0	0	0	0

Note 1.Upper edge of the detection zone below 900 mm is not included since they do not offer sufficient protection against circumventing or stepping over.

Note 2.When determining the values of this table, it shall not be interpolated. If the known values a, b or Cro are between two values of this table, the greater safety distance shall be used.

[Calculation example]

•T: Tm + Ts (s)

•Tm: Machine's response time (s)

•Ts: Response time of the F3SJ-E/B from ON to OFF (s)

• a: Height of machine hazardous zone (mm)

• b: Height of upper edge of detection zone (mm)

When Tm = 0.05 s, Ts = 0.01 s, a = 1,400 mm, b = 1,500 m:

From the table above, Cro = 850 mm. Since b is between 1,400 mm and 1,600 mm, b = 1,400 mm which has the greater Cro value, shall be used.

S = 2,000 mm/s × (0.05 s + 0.01 s) + 850 mm

= 970 mm

Since 970 mm is greater than 500 mm, use K = 1,600 mm/s and recalculate it.

S = 1,600 m/s × (0.05 s + 0.01 s) + 850 mm

= 946 mm

Compare S = 946 mm with the calculation in "If a person approaches the detection zone of the F3SJ perpendicularly", and choose the larger value as the safety distance.

For the system with a detection capability of 40 mm max., the safety distance S is 946 mm since this is larger than S = 120 mm calculated in the calculation example of "If a person approaches the detection zone of the F3SJ perpendicularly".

For the system with a detection capability larger than 40 mm, the safety distance S is 946 mm since this is the same value as S = 946 mm calculated in the calculation example of "If a person approaches the detection zone of the F3SJ perpendicularly".

If a person approaches the detection zone of the F3SJ-E/B horizontally

Use K = 1,600 mm/s and C = (1200 - 0.4 x H) in formula (1) for calculation.
Note that C must not be less than 850 mm.
S = 1,600 mm/s x (Tm + Ts) + 1200 - 0.4 x H
•S = Safety distance (mm)
•Tm = Machine's response time (s)
•Ts = Response time of the F3SJ-E/B from ON to OFF (s)
•H = Installation height of the F3SJ-E/B (mm)
Note that H must satisfy:
1000 >= H >= 15 (d - 50 mm)

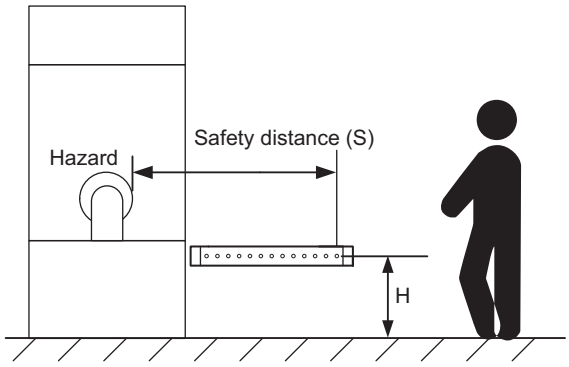

Also, you must include a hazardous condition under which a person may go carelessly through under a detection zone if it exceeds 300 mm (200 mm for other purpose than industrial use) into risk assessment.

[Calculation example]
When Tm = 0.05 s, Ts = 0.015 s, d = 25 mm, and H = 500 mm:
S = 1,600 mm/s x (0.05 s + 0.015 s) + 1200 - 0.4 x 500 mm
= 1,104 mm

■ How to calculate the safety distance specified by American Standard ANSI B11.19 (reference)

If a person approaches the detection zone of the F3SJ-E/B perpendicularly, calculate the safety distance as shown below.
S = K x (Ts + Tc + Tr + Tbm) + Dpf
•S: Safety distance
•K: Approach speed to the detection zone (the value recommended by OSHA standard is 1,600 mm/s)
Approach speed K is not specified in the ANSI B.11.19 standard. To determine the value of K to apply, consider all factors, including the operator's physical ability.
•Ts = Machine's stopping time (s)
•Ts = Response time of the F3SJ-E/B from ON to OFF (s)
•Tc = Machine control circuit's maximum response time required to activate its brake (s)
•Tbm = Additional time (s)
If a machine has a brake monitor, "Tbm = Brake monitor setting time - (Ts + Tc)". If it has no brake monitor, we recommend using 20% or more of (Ts + Tc) as additional time.
•Dpf = Additional distance
According to ANSI's formula, Dpf is calculated as shown below:
Dpf = 3.4 x (d - 7.0): Where d is the detection capability of the F3SJ-E/B (unit: mm)

[Calculation example]
When K = 1,600 mm/s, Ts + Tc = 0.06 s, brake monitor setting time = 0.1 s,
Tr = 0.015 s, and d = 25 mm:
Tbm = 0.1 - 0.06 = 0.04 s
Dpf = 3.4 x (25 - 7) = 61.2 mm
S = 1,600 mm/s x (0.06 s + 0.015 s + 0.04 s) + 61.2 mm = 245.2 mm

Distance from Reflective Surfaces

⚠ WARNING

Install the sensor system so that it is not affected by reflection from a glossy surface.
Failure to do so may hinder detection, resulting in serious injury.

Install the sensor system at distance D or further from highly reflective surfaces such as metallic walls, floors, ceilings, or workpieces, as shown below.

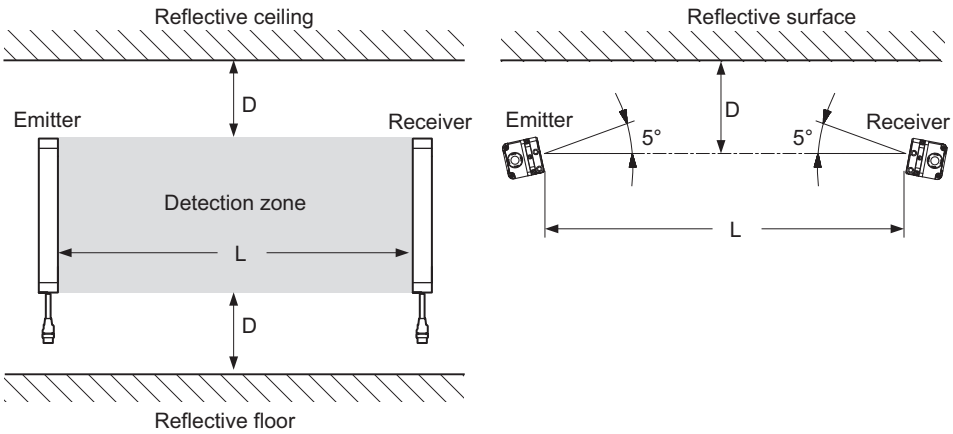

Distance between an emitter and a receiver (operating range L)	Allowable installation distance D
0.2 to 3 m	0.13 m
More than 3 m	L/2 x tan5° = L x 0.044 (m)

Mutual Interference Prevention

Mutual interference is prevented in up to three sets, using interference light detection and cycle shift algorithm.
If four or more sets of F3SJ-E/Bs are installed, arrange them so that mutual interference does not occur. If two sets are installed near each other, reflection from the surface of the F3SJ-E/B may cause mutual interference. When mutual interference occurs, the safety outputs are turned OFF in a moment or the F3SJ-E/B enters lockout state.
Combining countermeasures 1 to 3 shown below is effective.

1. Install a physical barrier between two sets

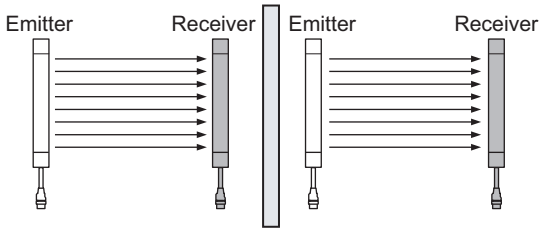

2. Alternate the direction of emission between two sets (alternation)

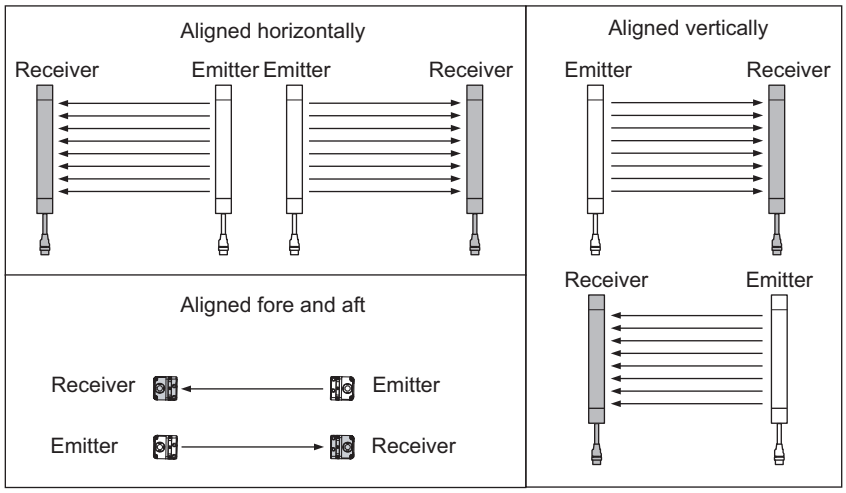

If two sets of F3SJ-E/Bs are installed near each other, reflection from the surfaces may cause mutual interference.

3. Keep sufficient distance between the F3SJ-E/Bs so that mutual interference does not occur

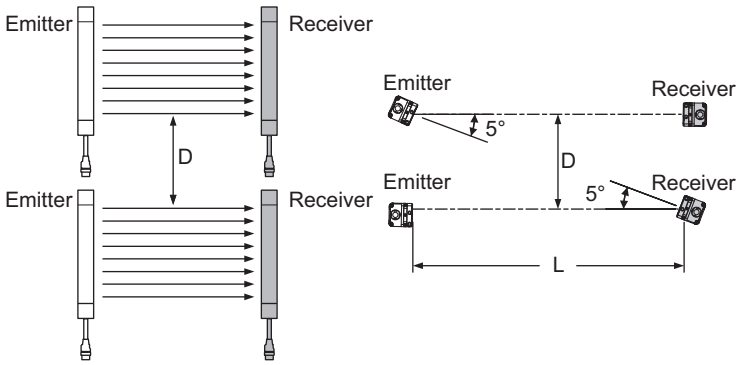

Distance between emitter and receiver (operating range L)	Allowable installation distance D
0.2 to 3 m	0.26 m
More than 3 m	L x tan5° = L x 0.088 (m)

When using four or more sets, the installations shown below may cause mutual interference. When mutual interference occurs, the safety outputs are turned OFF in a moment or the F3SJ-E/B enters lockout state.

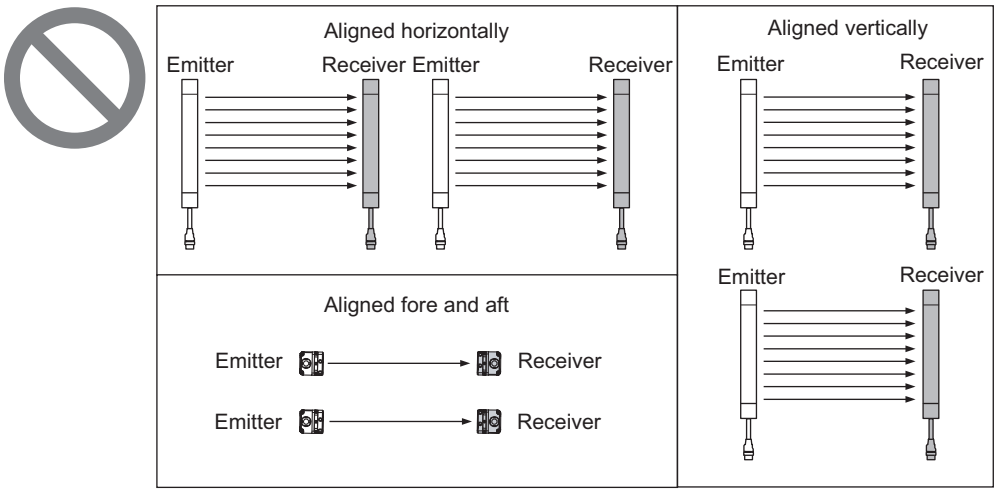

Series Connection

Easy Type	
Basic Type (basic system)	✓
Basic Type (muting system)	✓

Up to three sets of F3SJ-Bs can be series-connected. Series connection allows them to be used as a safety light curtain, requiring only one set to be wired to a controller and preventing mutual interference.
If any one set of series-connected F3SJ-B is blocked, both of the safety outputs turn OFF. The indication LED for each F3SJ-B turns ON separately.

- Number of connections: Up to three sets
- Total number of beams: Up to 192 beams
- Connection cable length between two F3SJ-Bs in series connection: 7 m max.

Ex.: Configuring an U-shaped detection zone

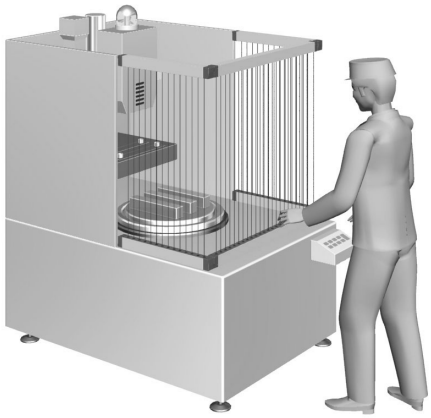

The terms used in this document to describe each F3SJ-B in a series connection are shown below.

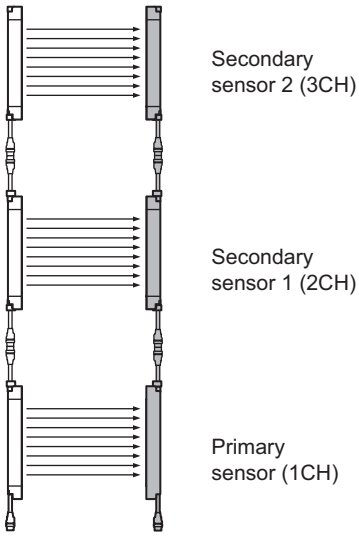

CHECK!

Easy Type cannot be series-connected.

Properly connect an emitter to another emitter, and a receiver to another receiver, as shown below.

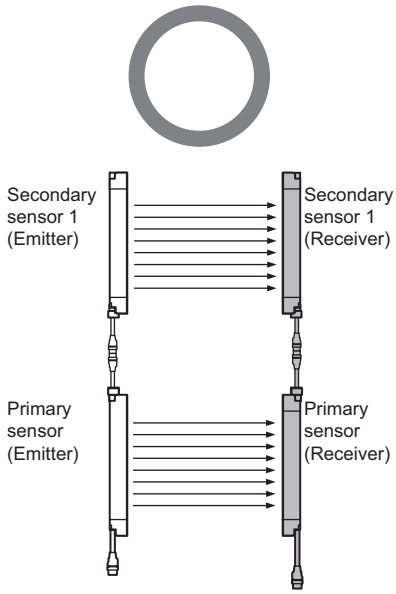

Do not series-connect an emitter and receiver. They will enter lockout state.

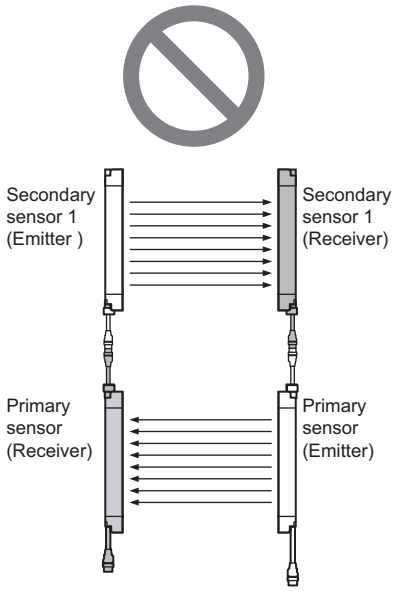

Do not face different models of emitters and receivers toward each other. They will enter lockout state or will be unable to detect objects.

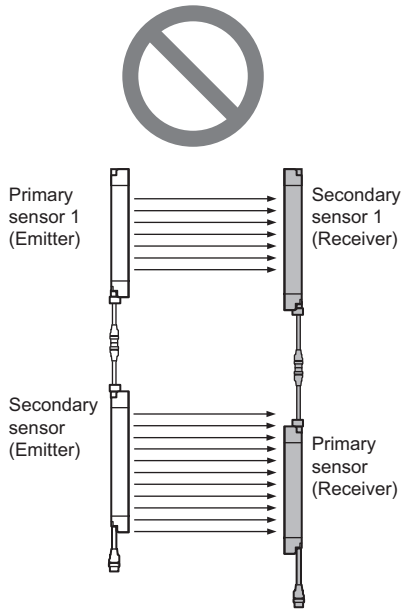

CHECK!

If caps and series connection cables for extension are not connected properly, the F3SJ-B enters lockout (when power is turned ON).

Connection Procedure

1. Remove the caps from the primary sensor. Loosen the screw (M3 cross-shaped) to remove the cap.
2. Use the F39-JBR2W series connection cable for extension to connect them.
3. When changing the connection distance between the F3SJ-Bs, connect a F39-JD□B double-ended connector cable (sold separately).

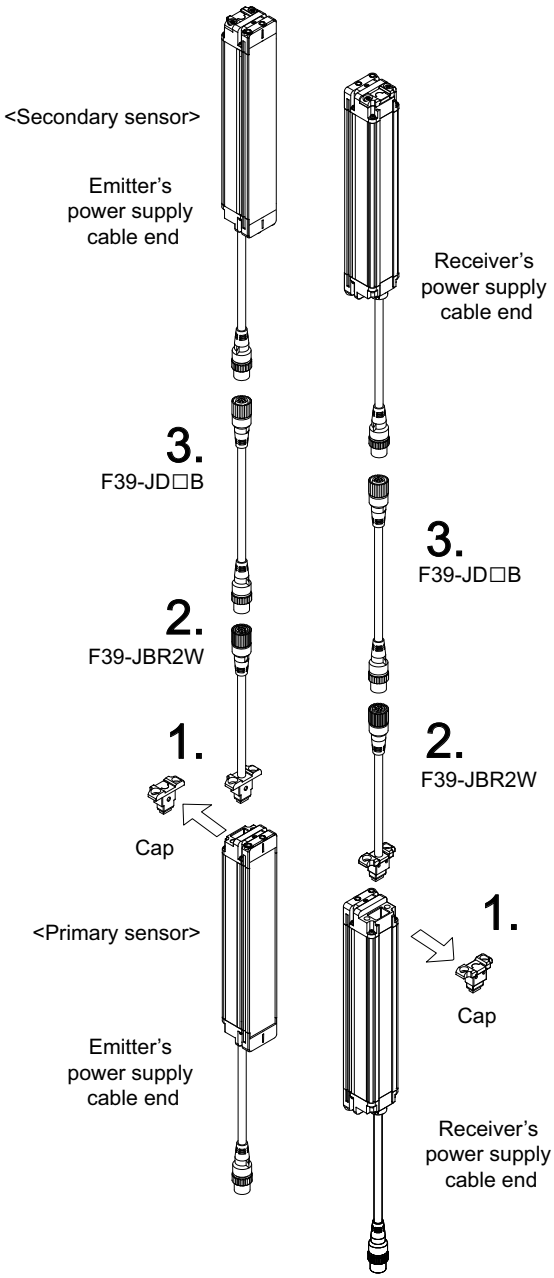

CHECK!

- When attaching a cable or cap, securely fasten the screws (M3 cross-shaped (2 for each), recommended torque: 0.54 N•m).
  Failure to do so may cause the cable/cap to come loose, leading to deterioration of the protective functions.
- Attaching/detaching of a cap or a series-connection cable may cause misalignment of rubber grommet in a connector assembly.
  Press the grommet to the bottom of the connector and attach the connector F3SJ-B again.

Dimensions

Difference between Easy Type and Basic Type

The differences in appearance between F3SJ-E and F3SJ-B are the cable length and the shape of the cable end.

Each cable shape is shown as follows.

■ Easy Type

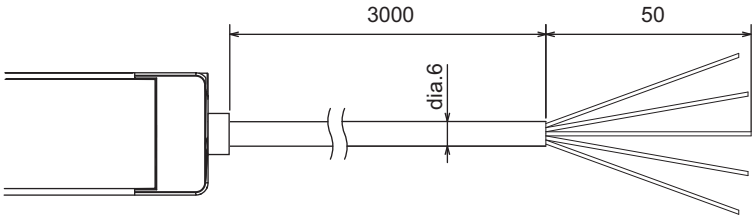

■ Basic Type

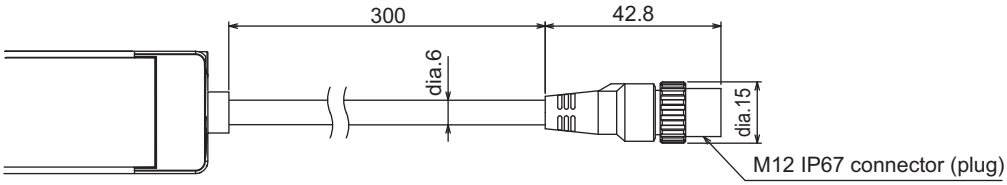

[Unit: mm]

When Using Top/Bottom and Intermediate Brackets

■ Backside mounting

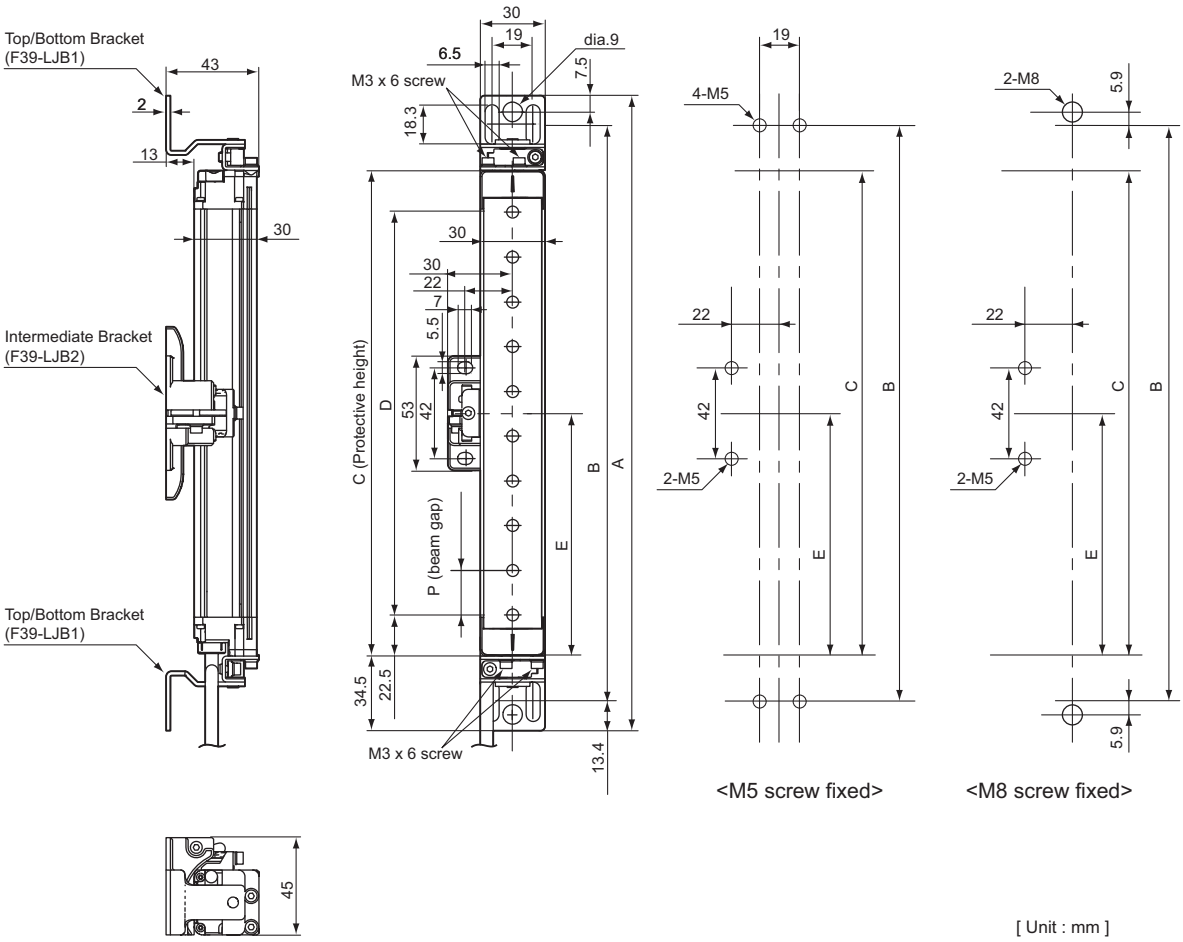

[Unit : mm]

Dimensions A to E and P

A	C+69
B	C+42.2
C	4-digit number of the type name (protective height)
D	C-45
E	Depends on the protective height. See the table below.
P	20

Dimensions E

Protective height	Number of Intermediate Brackets	Dimensions E
0185 to 1105	0	-
1185 to 1345	1	C/2 max.
1425 to 2065	2	C/3 max.

* Value E must be 700 mm or less when not using value E obtained from the calculation above.

Bracket mounting procedure (Mounting) p.71

CHECK!

- If the protective height is 1105 mm or more, use Intermediate Brackets of specified quantities and locations according to the dimensions. If the brackets described above are not used, ratings and performance cannot be met.
- When you use a sensor in a situation where the sensor is under a load, add an Intermediate Bracket.

■ Side mounting

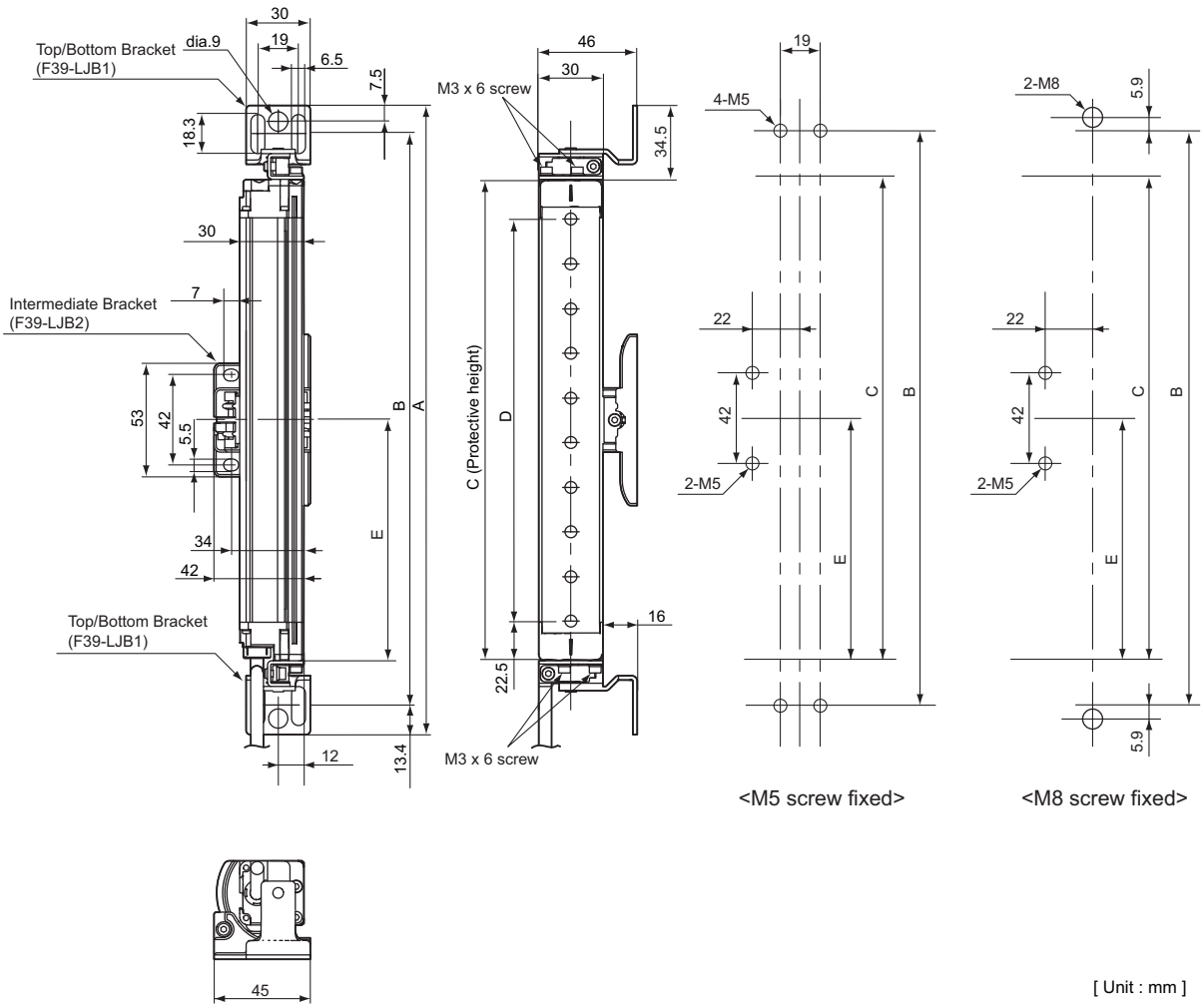

<M5 screw fixed> <M8 screw fixed>

[Unit : mm]

Dimensions A to E

A	C+69
B	C+42.2
C	4-digit number of the type name (protective height)
D	C-45
E	Depends on the protective height. See the table below.

Dimensions E

Protective height	Number of Intermediate Brackets	Dimensions E
0185 to 1105	0	-
1185 to 1345	1	C/2 max.
1425 to 2065	2	C/3 max.

* Value E must be 700 mm or less when not using value E obtained from the calculation above.

Bracket mounting procedure (Mounting) p.71

CHECK!

- If the protective height is more than 1105 mm, use Intermediate Brackets of specified quantities and locations according to the dimensions. If the brackets described above are not used, ratings and performance cannot be met.
- When you use a sensor in a situation where the sensor is under a load, add an Intermediate Bracket.

■ Dimensions of Top/Bottom Brackets

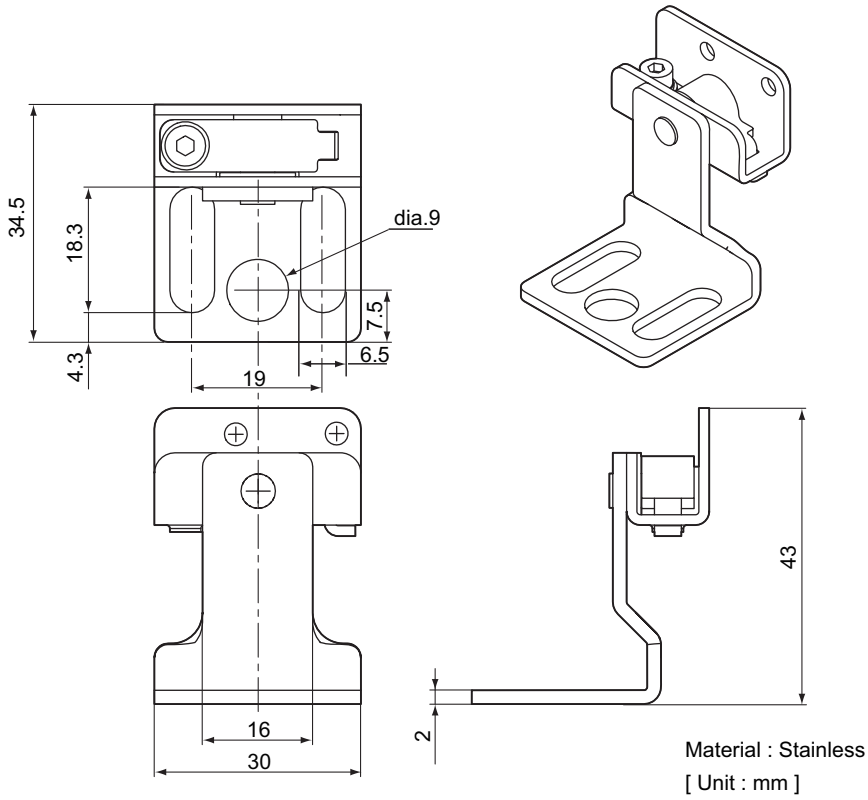

■ Dimensions of Intermediate Brackets (backside mounting)

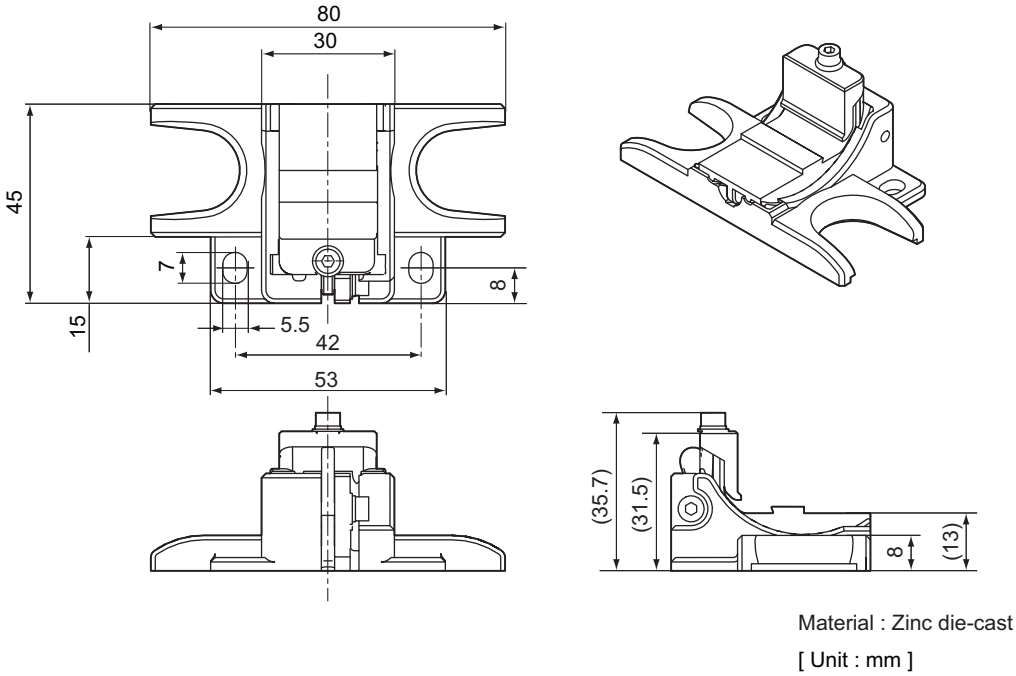

■ Dimensions of Intermediate Brackets (side mounting)

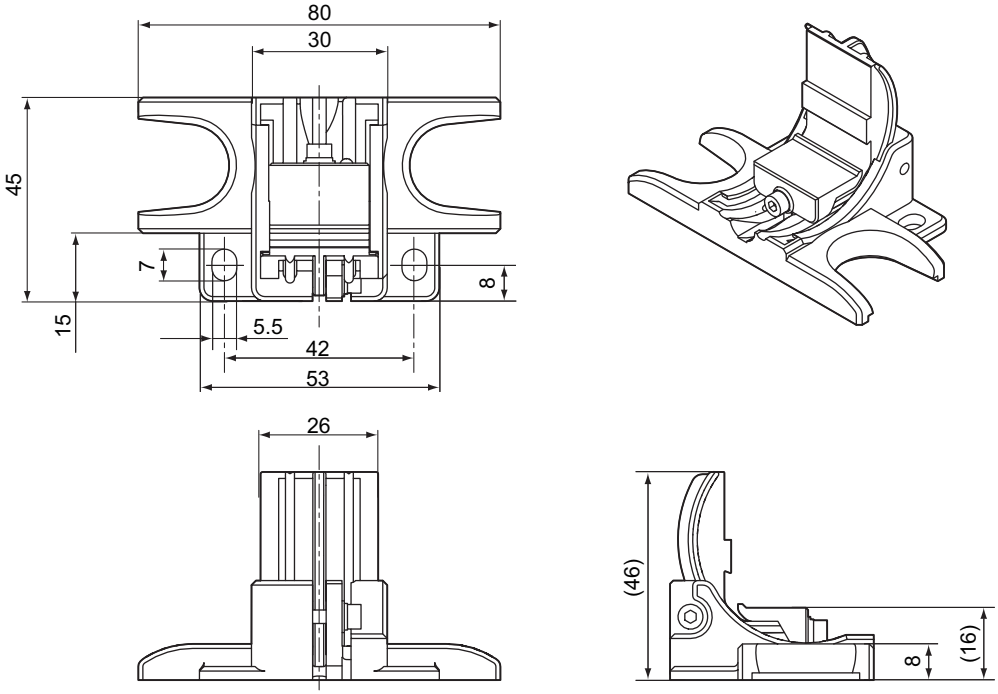

Material : Zinc die-cast

[Unit : mm]

When Using Intermediate Brackets Only (Free-Location Mounting)

■ Backside mounting

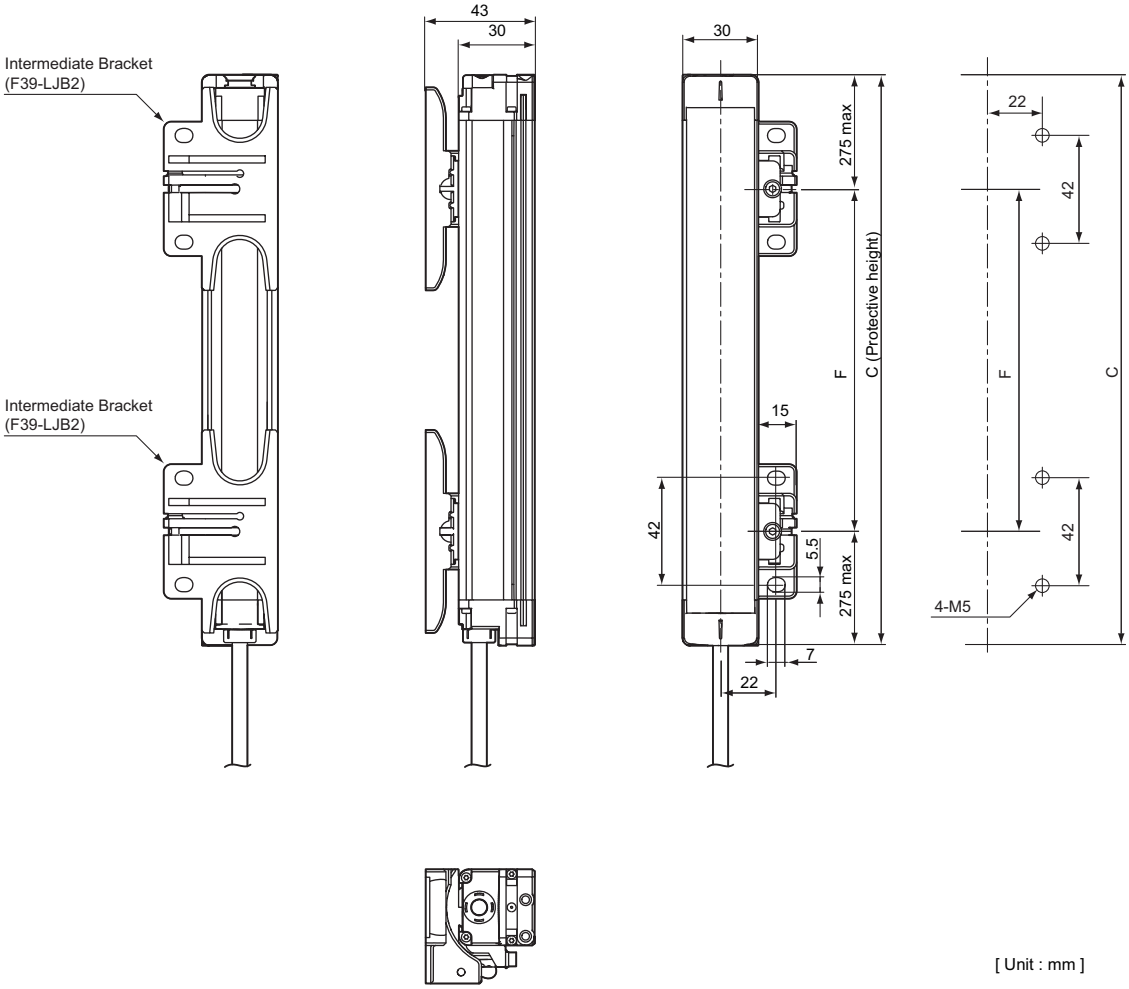

[Unit : mm]

Dimensions C and F

C	4-digit number of the type name (protective height)
F	Depends on the protective height. See the table below.

Dimensions F

Protective height	Number of Intermediate Brackets	Dimensions F
0185 to 0225	1	-
0305 to 1105	2	555 mm max.
1185 to 1585	3	555 mm max.
1665 to 2065	4	555 mm max.

Bracket mounting procedure (Mounting) p.71

CHECK!

The alignment range of the Intermediate Bracket must be ±30°.

• Mounting with one Intermediate Bracket

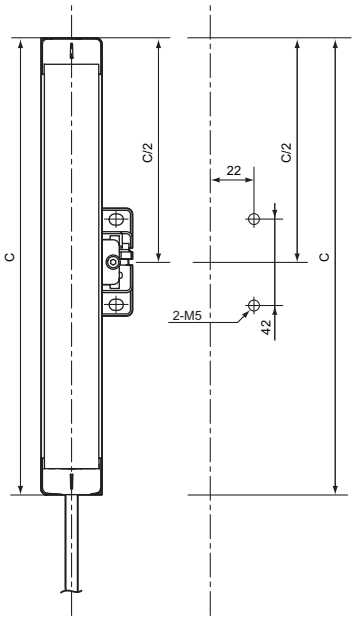

• Mounting with three Intermediate Brackets

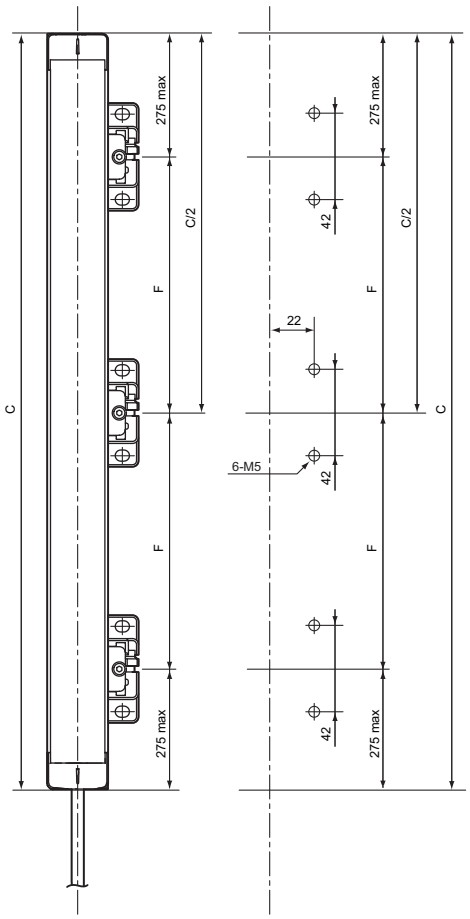

• Mounting with four Intermediate Brackets

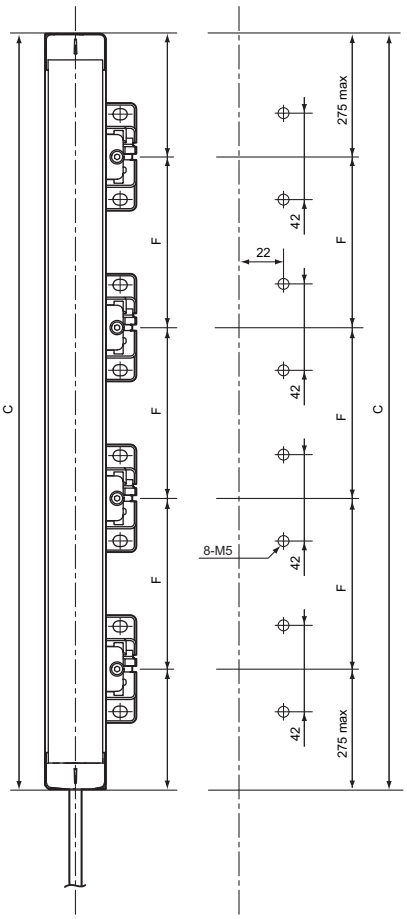

[Unit: mm]

■ Side mounting

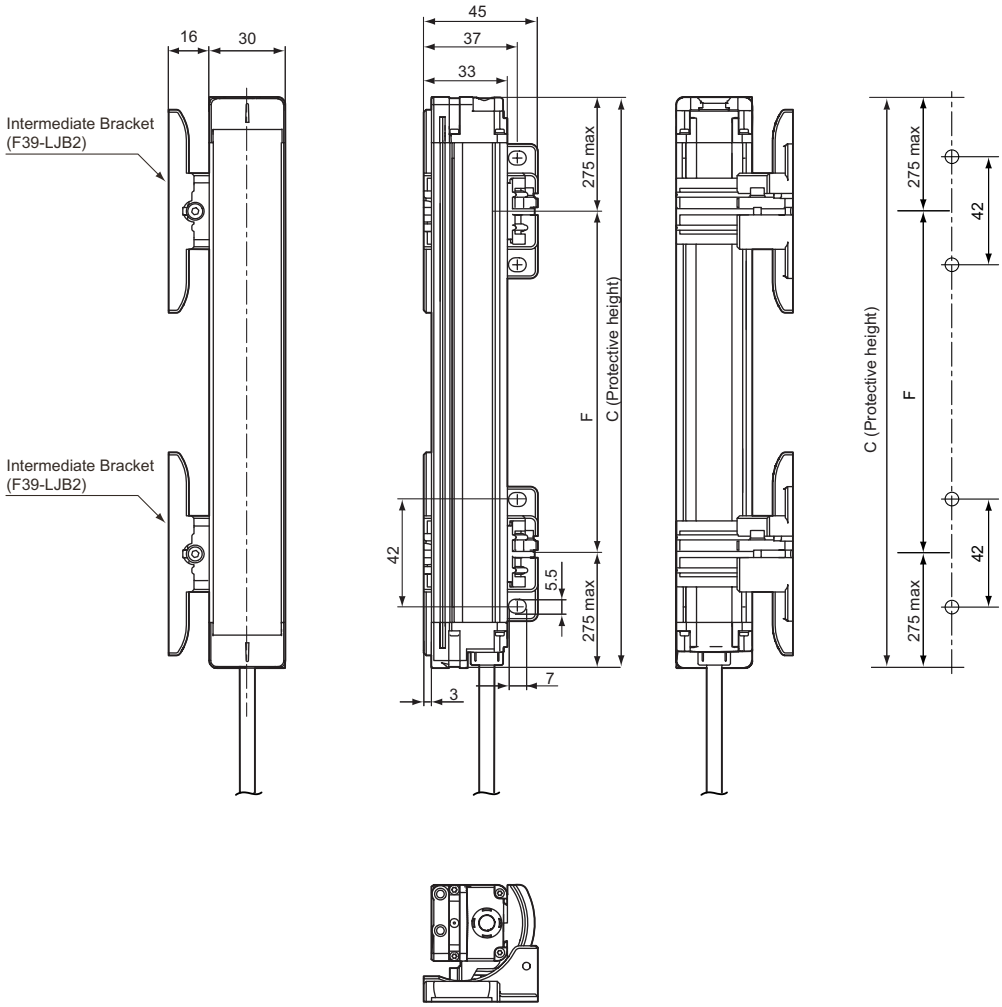

[Unit : mm]

Dimensions C and F

C	4-digit number of the type name (protective height)
F	Depends on the protective height. See the table below.

Dimensions F

Protective height	Number of Intermediate Brackets	Dimensions F
0185 to 0225	1	-
0305 to 1105	2	555 mm max.
1185 to 1585	3	555 mm max.
1665 to 2065	4	555 mm max.

Bracket mounting procedure (Mounting) p.71

CHECK!

The alignment range of the Intermediate Bracket must be ±30°.

• Mounting with one Intermediate Bracket

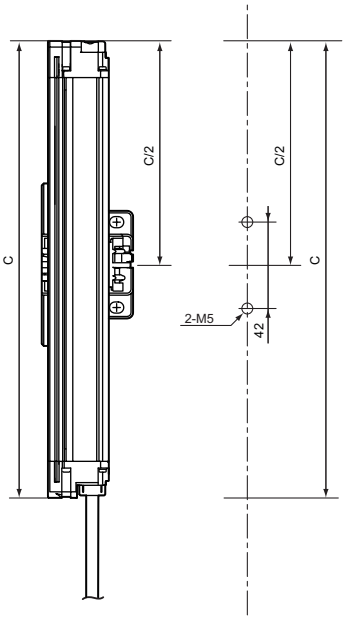

• Mounting with three Intermediate Brackets

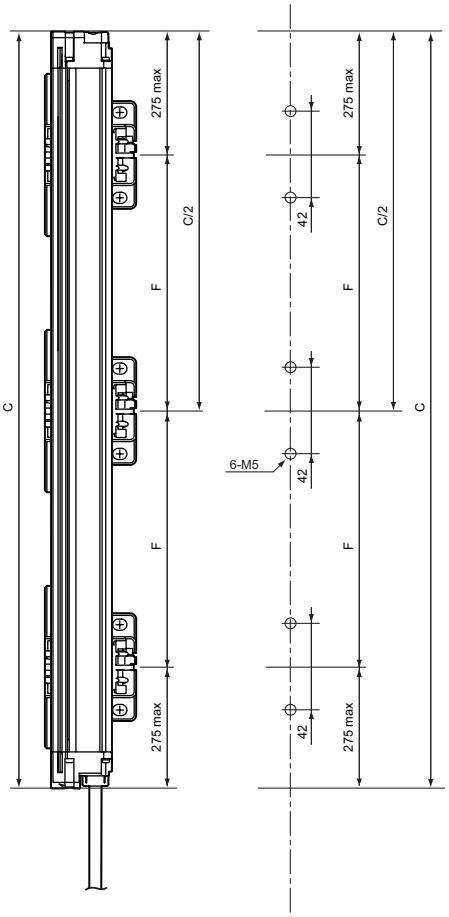

• Mounting with four Intermediate Brackets

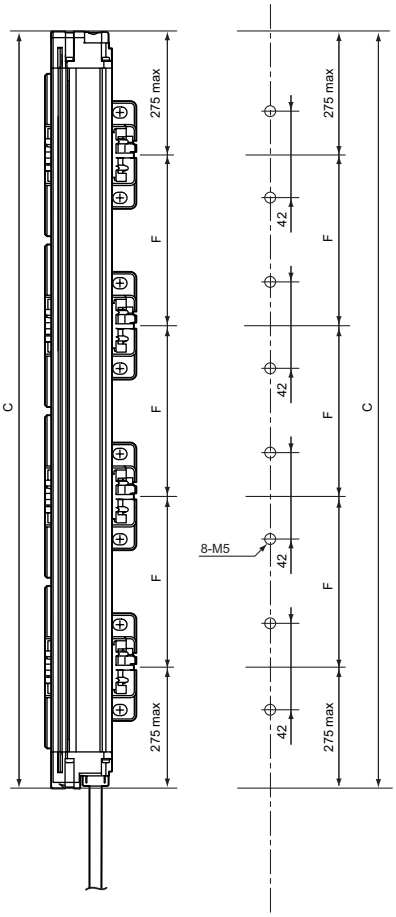

[Unit: mm]

When Using One-touch Brackets

■ Backside mounting

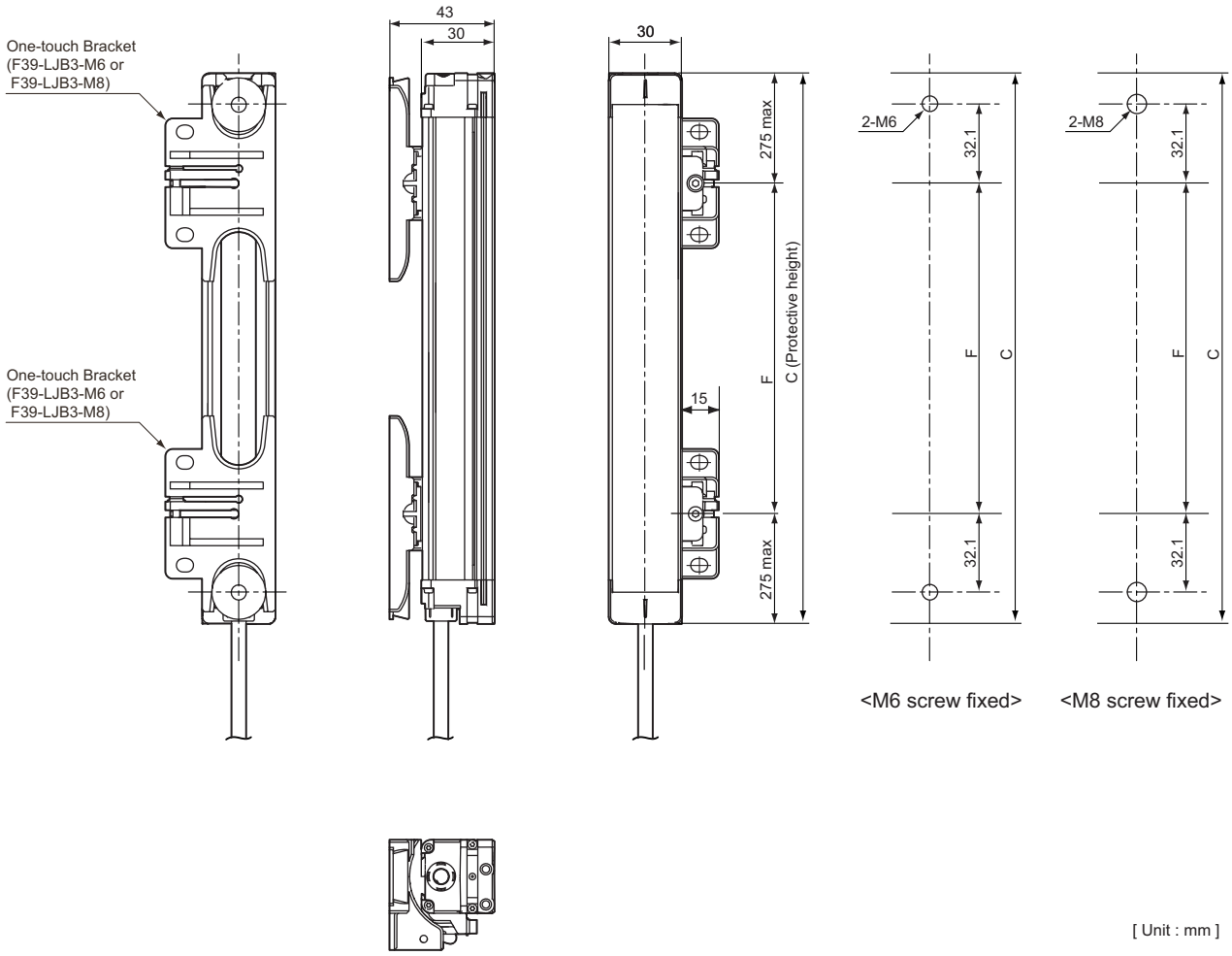

Dimensions C and F

C	4-digit number of the type name (protective height)
F	Depends on the protective height. See the table below.

Dimensions F

Protective height	Number of Intermediate Brackets	Dimensions F
0185 to 1105	2	555 mm max.
1185 to 1585	3	555 mm max.
1665 to 2065	4	555 mm max.

Bracket mounting procedure (Mounting) p.71

CHECK!

The alignment range of the One-touch Bracket must be ±30°.

• Mounting with three One-touch Brackets

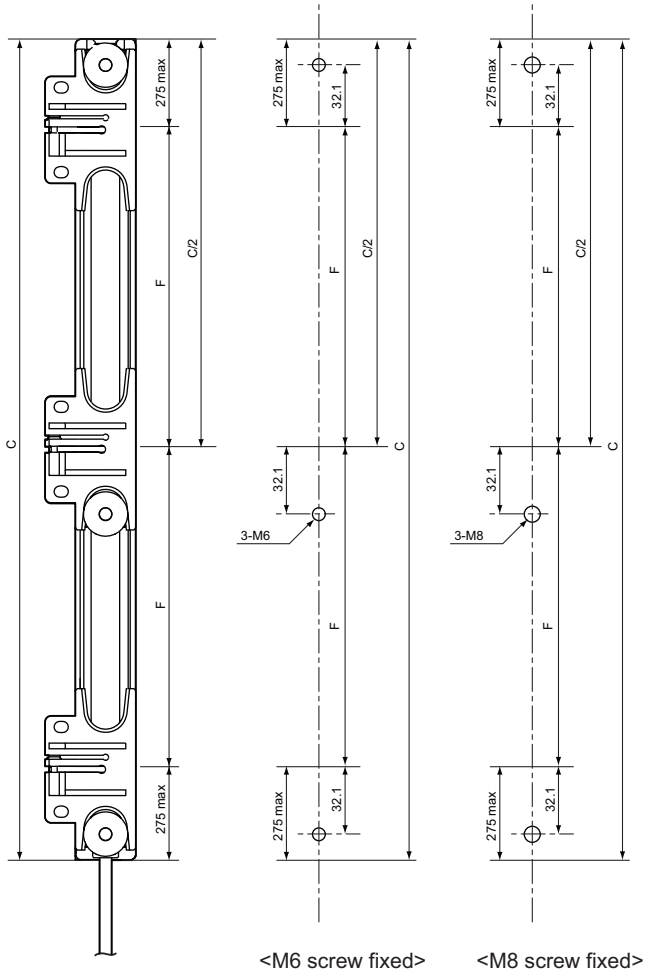

<M6 screw fixed> <M8 screw fixed>

• Mounting with four One-touch Brackets

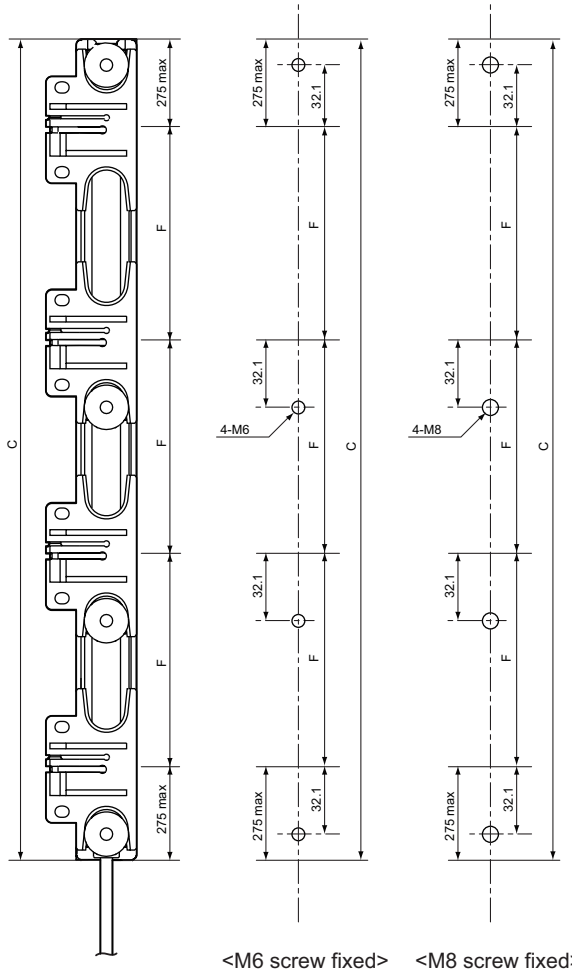

<M6 screw fixed> <M8 screw fixed>

[Unit: mm]

■ Side mounting

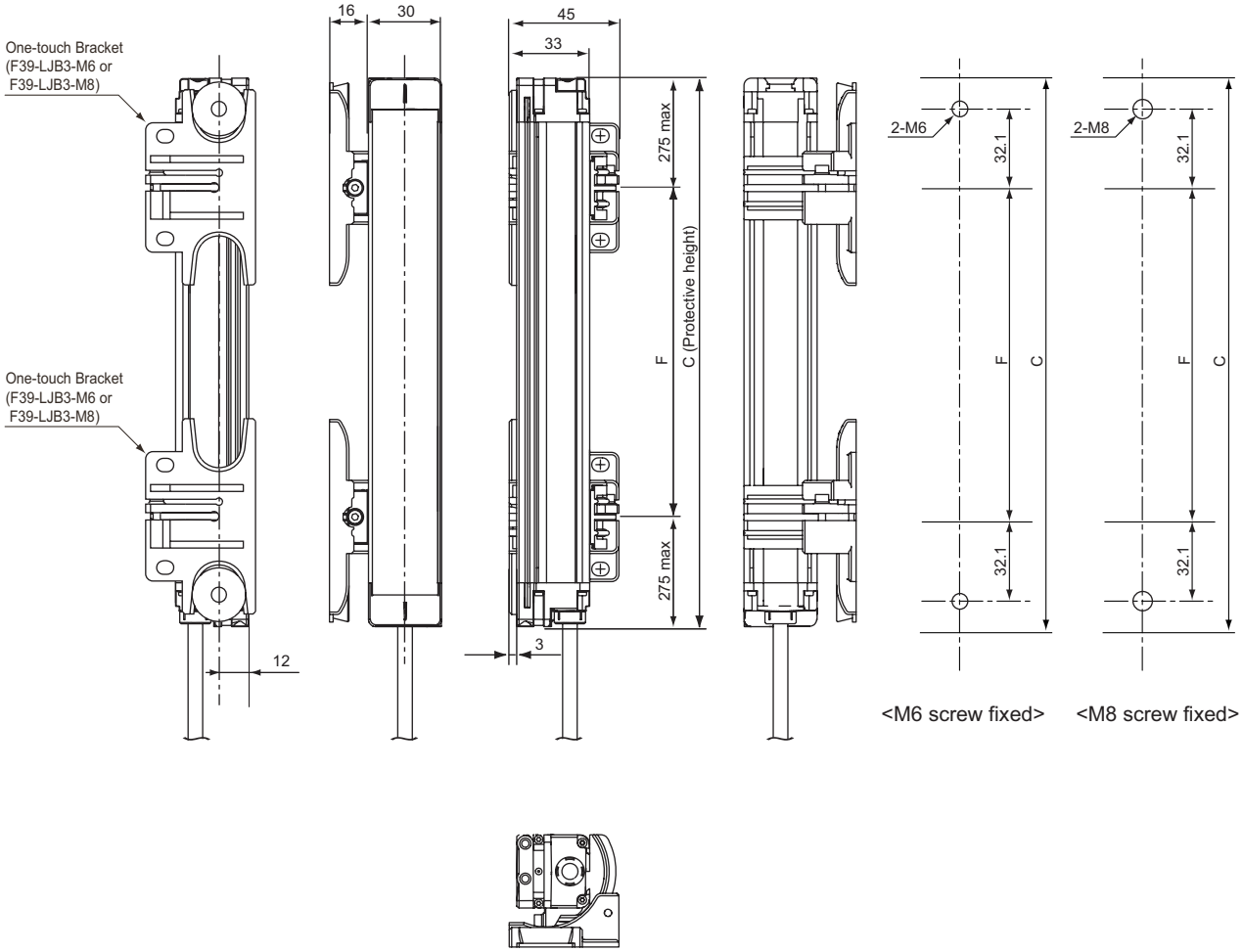

[Unit : mm]

Dimensions C and F

C	4-digit number of the type name (protective height)
F	Depends on the protective height. See the table below.

Dimensions F

Protective height	Number of Intermediate Brackets	Dimensions F
0185 to 1105	2	555 mm max.
1185 to 1585	3	555 mm max.
1665 to 2065	4	555 mm max.

Bracket mounting procedure (Mounting) p.71

CHECK!

The alignment range of the One-touch Bracket must be ±30°.

• Mounting with three One-touch Brackets

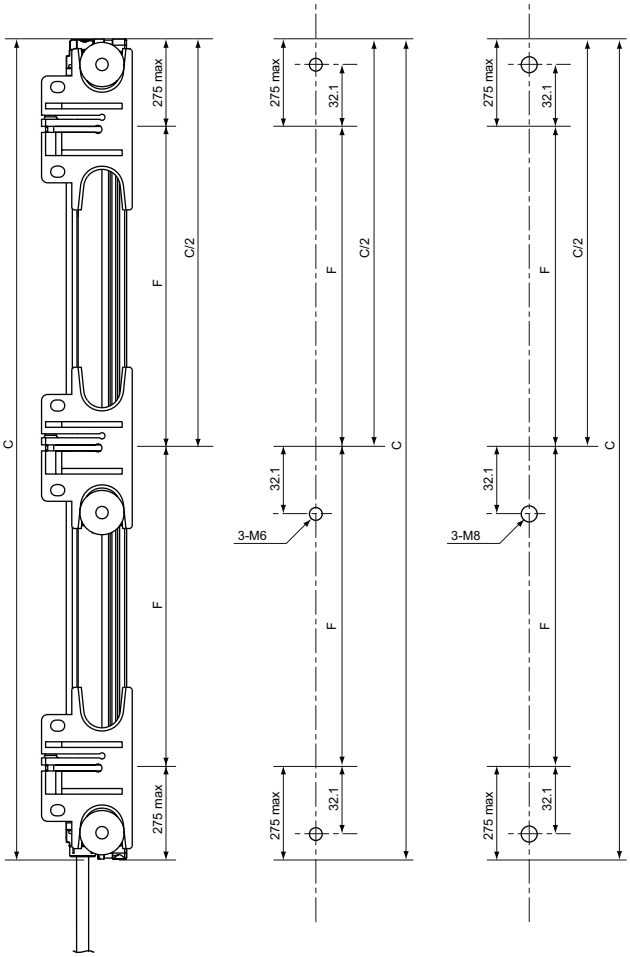

<M6 screw fixed> <M8 screw fixed>

• Mounting with four One-touch Brackets

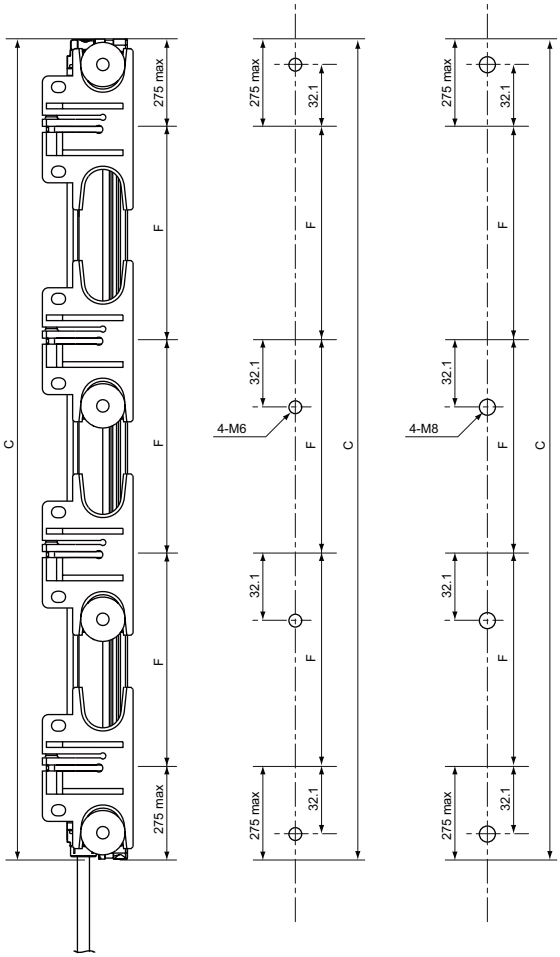

<M6 screw fixed> <M8 screw fixed>

[Unit: mm]

■Dimensions of One-touch M6 Bracket

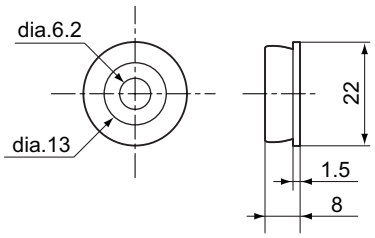

Material : Stainless

■Dimensions of One-touch M8 Bracket

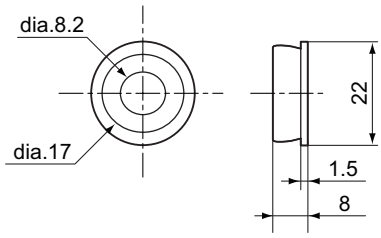

Material : Stainless

■ Dimensions of Intermediate Bracket + One-touch Bracket (backside mounting)

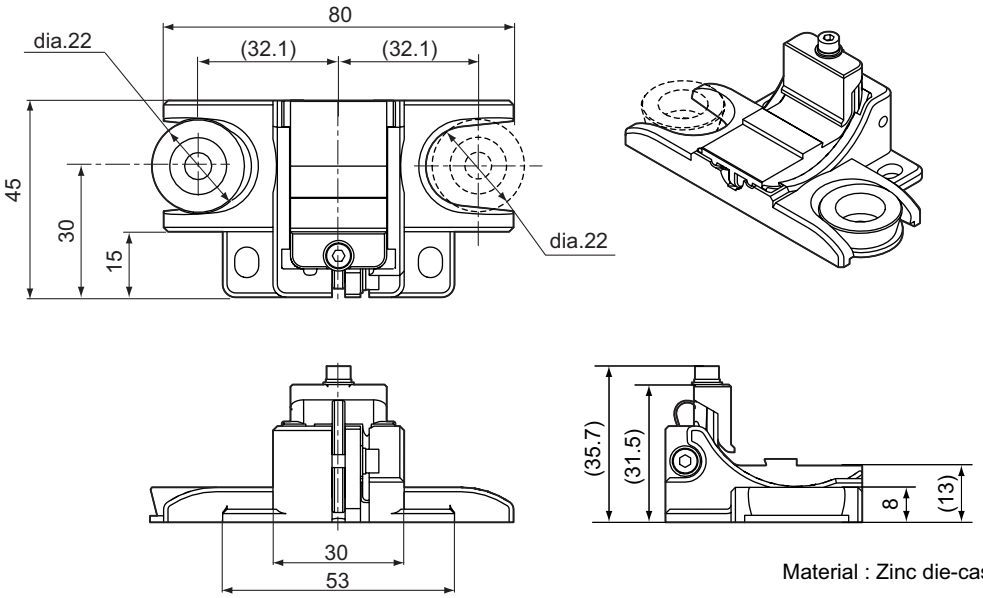

Material : Zinc die-cast

[Unit : mm]

■ Dimensions of Intermediate Bracket + One-touch Bracket (side mounting)

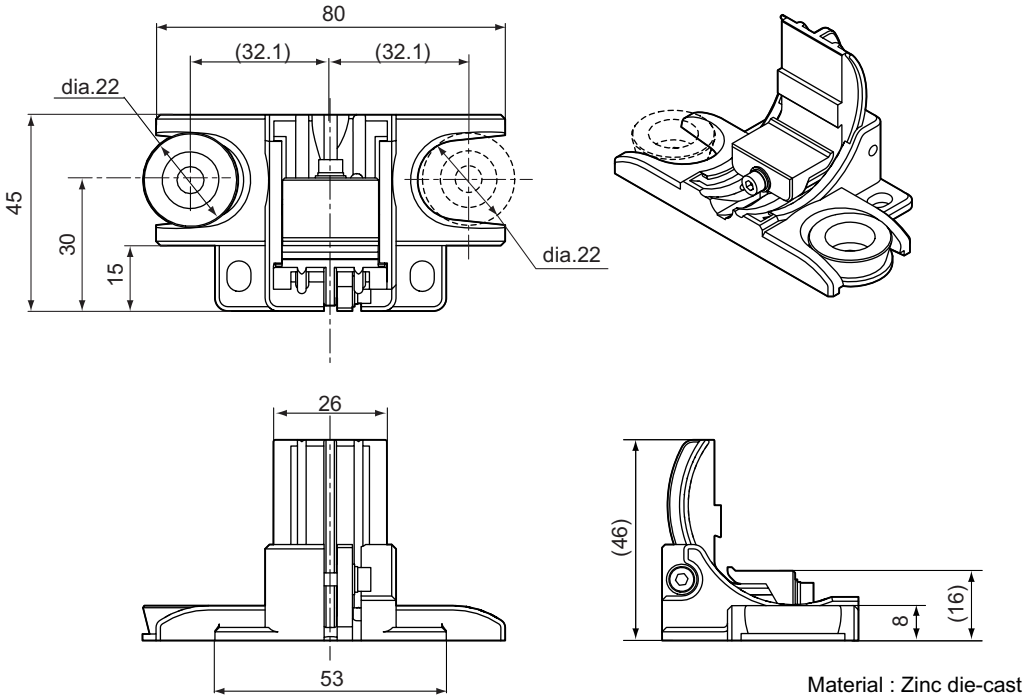

Material : Zinc die-cast

[Unit : mm]

When Using Replacement Brackets

■ Backside mounting

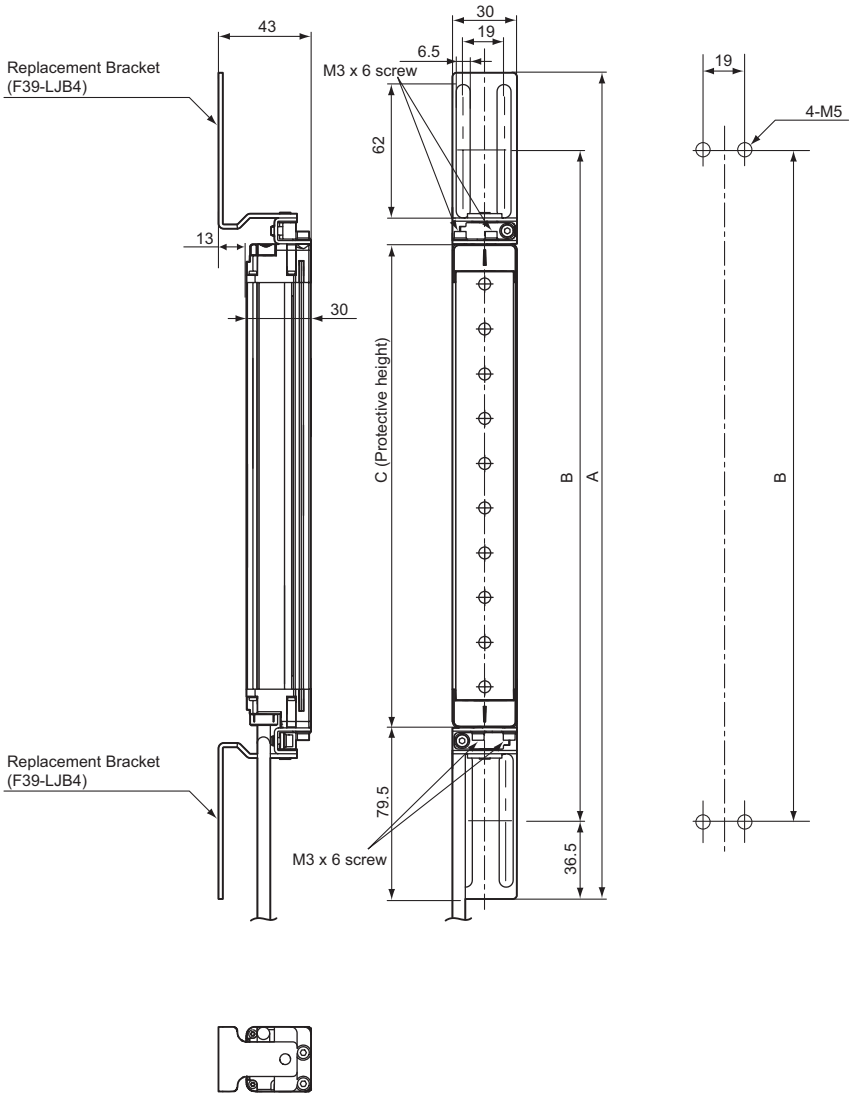

[Unit : mm]

Dimensions A to C

A	C+159
B	C+86
C	4-digit number of the type name (protective height)

Bracket mounting procedure (Mounting) p.71

CHECK!

If the protective height is more than 1105 mm, use Intermediate Brackets of the quantities and locations according to the dimensions described on page 51 "When Using Top/Bottom and Intermediate Brackets". If the brackets described above are not used, ratings and performance cannot be met.

■ Side mounting

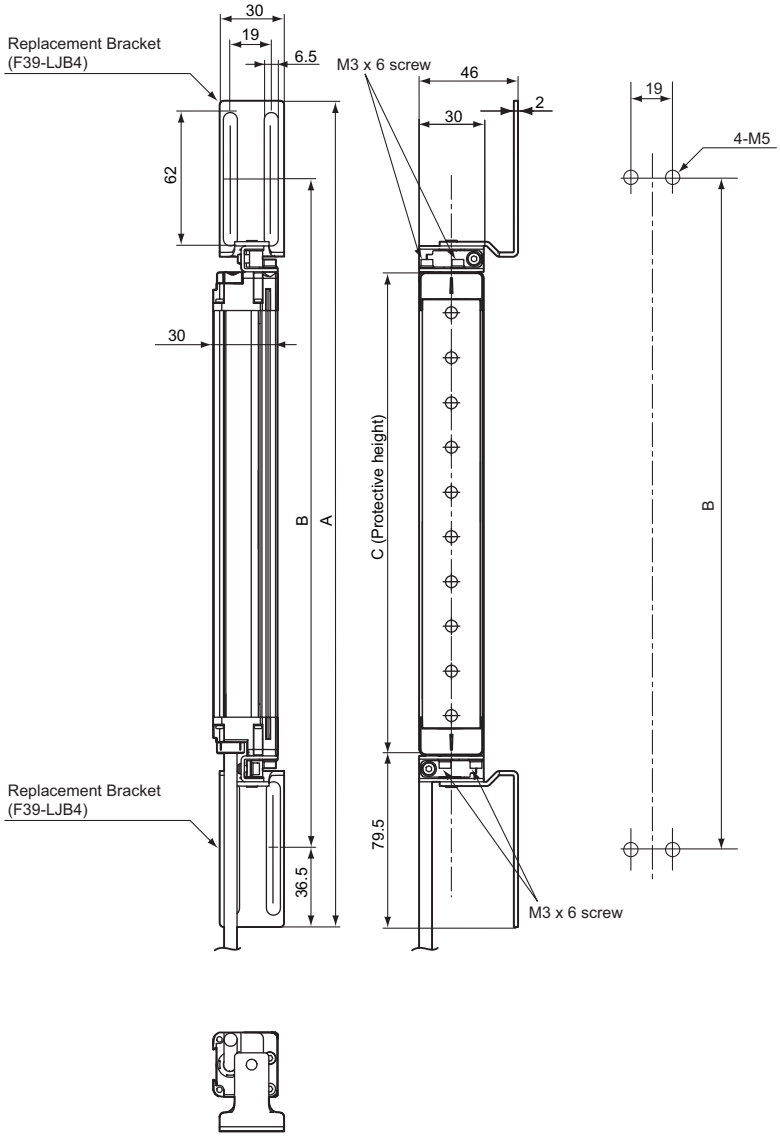

[Unit : mm]

Dimensions A to E and P

A	C+159
B	C+86
C	4-digit number of the type name (protective height)

Bracket mounting procedure (Mounting) p.71

CHECK!

If the protective height is more than 1105 mm, use Intermediate Brackets of the quantities and locations according to the dimensions described on page 51 "When Using Top/Bottom and Intermediate Brackets". If the brackets described above are not used, ratings and performance cannot be met.

■ Dimensions of replacement bracket

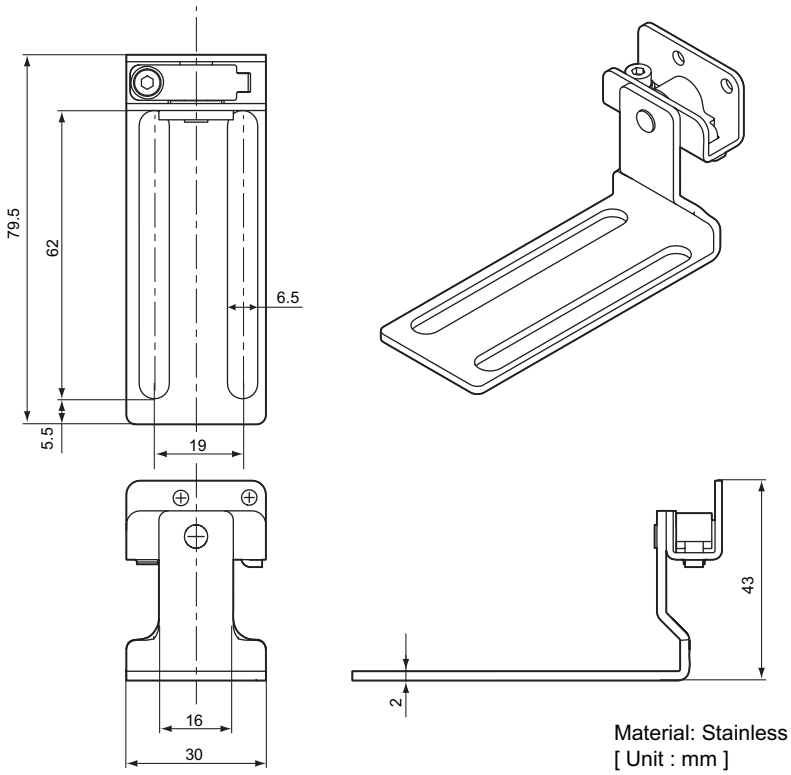

When Using Contact Mount Brackets

■ Backside mounting

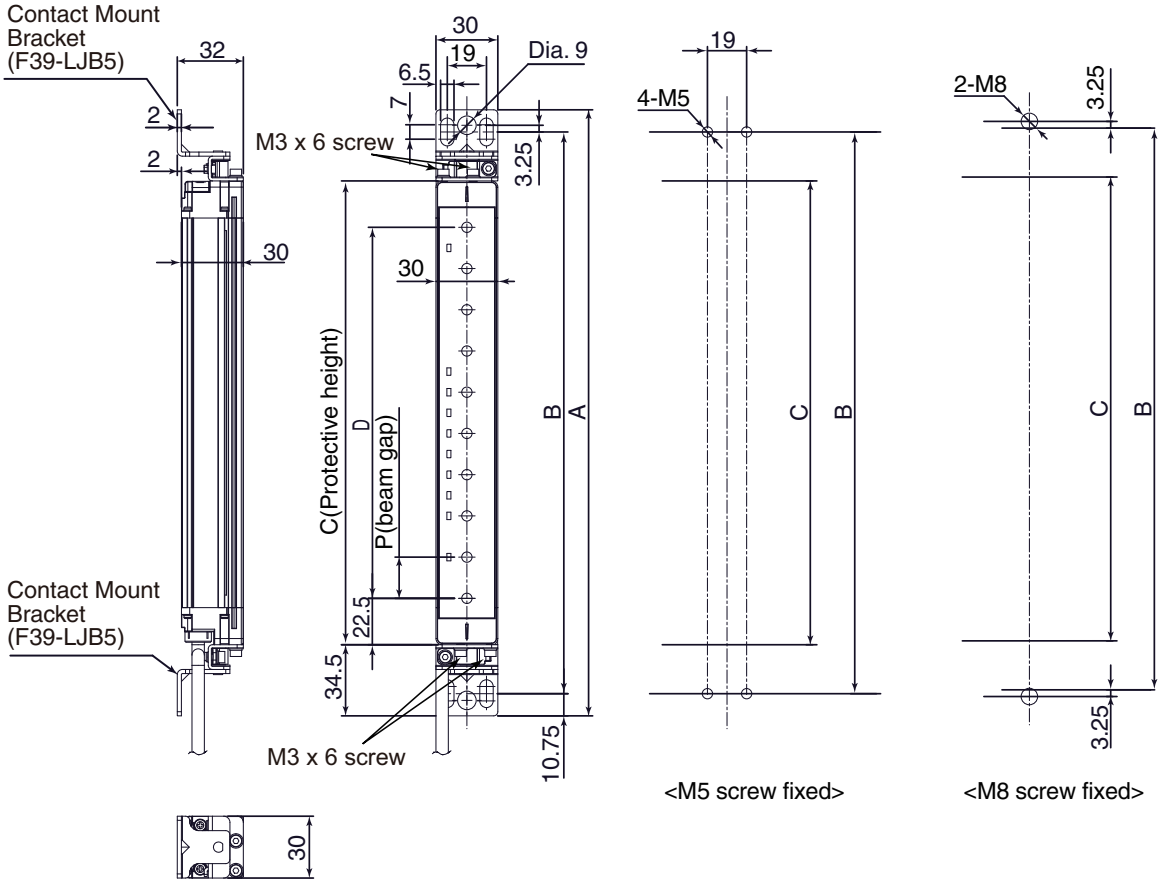

Dimensions A to D

A	C+69
B	C+47.5
C	4-digit number in the Model name (protective height)
D	C-45

CHECK!

- The protective height of the F3SJ-E/B series that supports the contact mount bracket is limited.
  Protective height allowed for mounting: 185 mm to 1,105 mm.
- Brackets of other models such as F39-LJB1 cannot be used simultaneously.

■ Side mounting

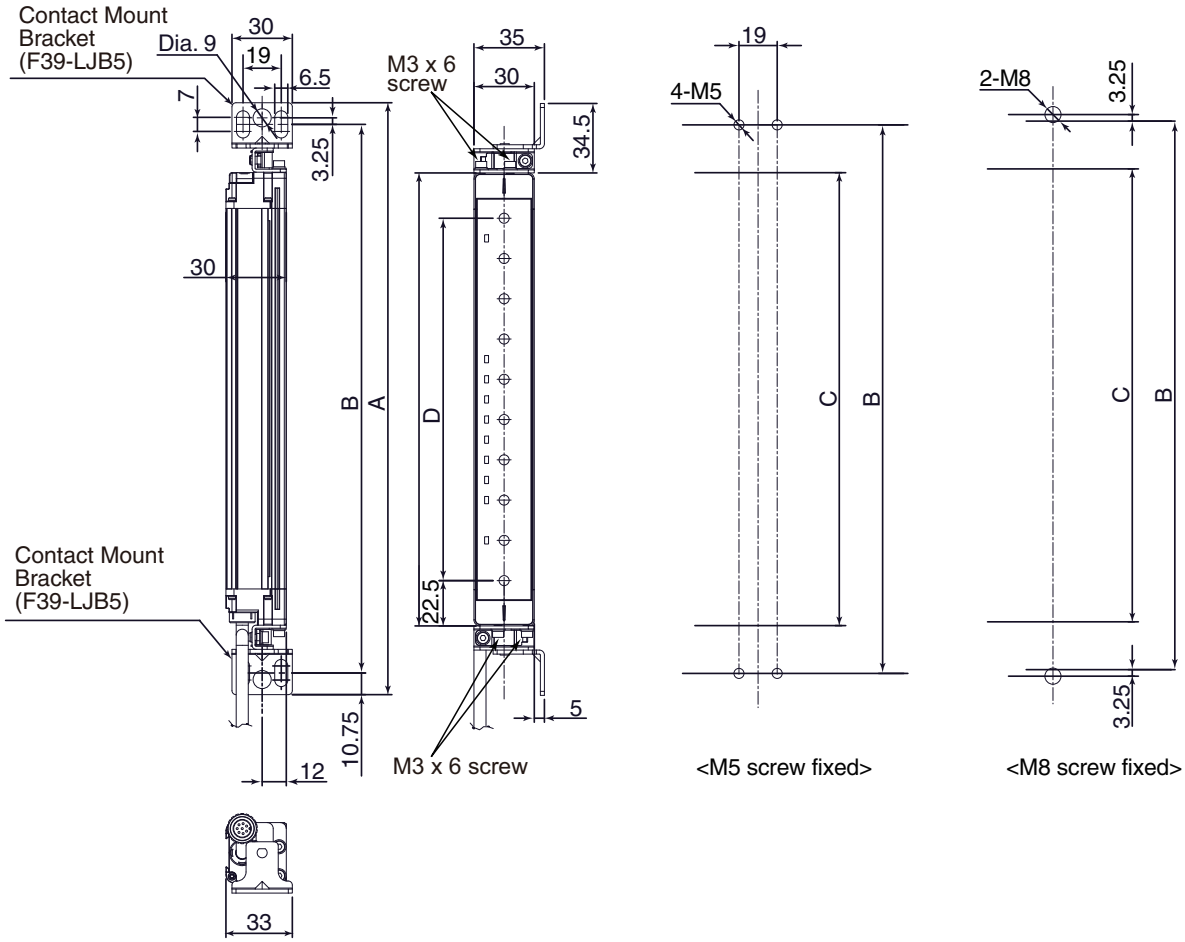

Dimensions A to D

A	C+69
B	C+47.5
C	4-digit number in the Model name (protective height)
D	C - 45

CHECK!

- The protective height of the F3SJ-E/B series that supports the contact mount bracket is limited.
  Protective height allowed for mounting: 185 mm to 1,105 mm.
- Brackets of other models such as F39-LJB1 cannot be used simultaneously.

■ Dimensions of contact mount bracket

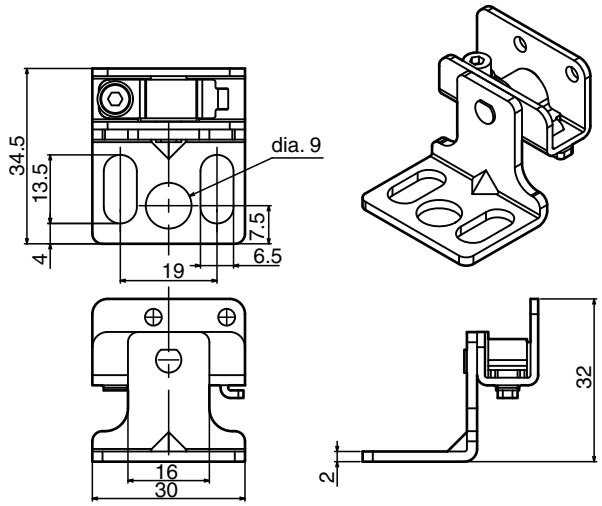

Material: Stainless

(Unit: mm)

When Using Spatter Protection Cover

■ Dimensions of Spatter Protection Cover F39-HB□□□□

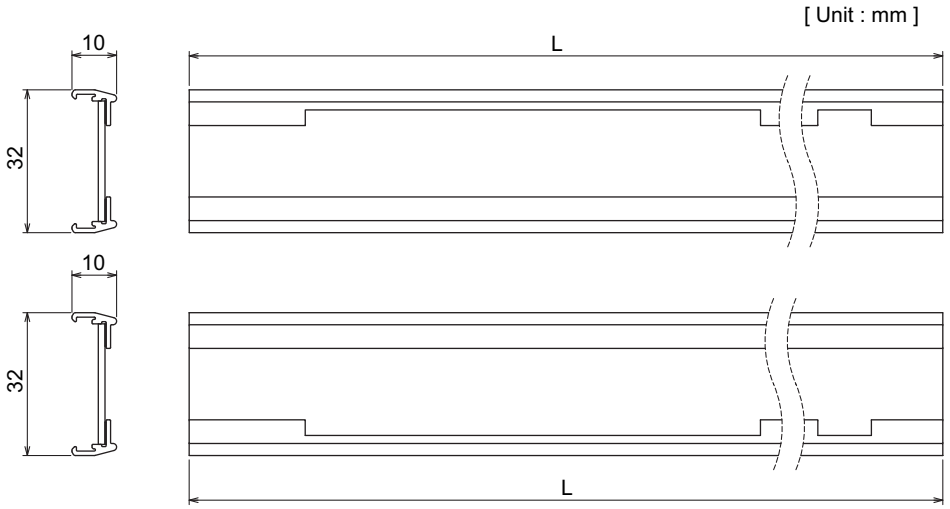

L = □□□□ - 21mm

Material: PC (Protection cover)

■ Assembly Dimensions

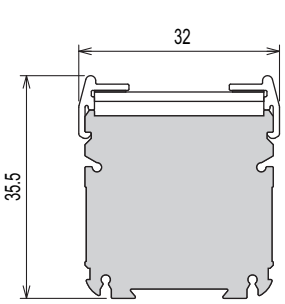

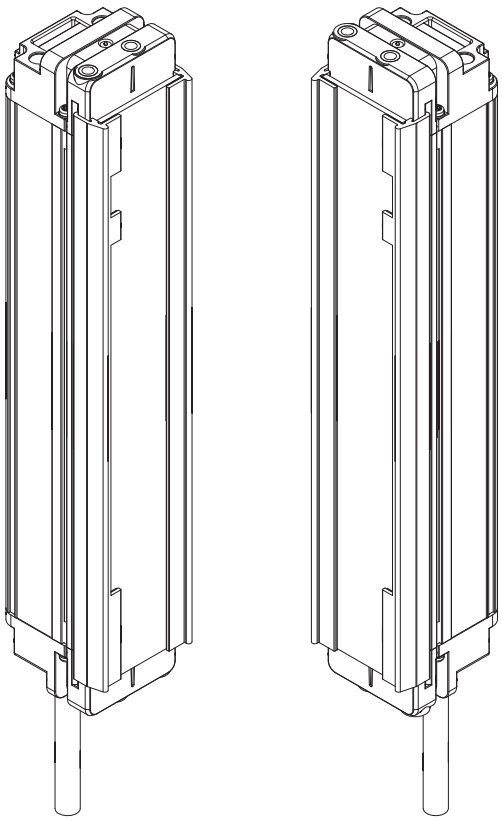

Mounting

Mounting Method

Mounting methods include use of Top/Bottom Brackets, Top/Bottom Brackets + Intermediate Brackets, Intermediate Brackets only (Free-Location Mounting) and use of One-touch Brackets. Any of these mounting methods allows the user to use the same bracket for the backside mounting and side mounting.

Number of Brackets Required

The numbers of brackets required according to the protective heights of the sensor are as follows:

•When Using Top/Bottom Brackets Only --> p.72
•When Using Top/Bottom + Intermediate Brackets --> p.74

Protective height	Number of Top/ Bottom Brackets	Number of Intermediate Brackets
0185 to 1105	2	0
1185 to 1345	2	1
1425 to 2065	2	2

• When Using Intermediate Brackets Only --> p.78

Protective height	Number of Intermediate Brackets
0185 to 0225	1
0305 to 1105	2
1185 to 1585	3
1665 to 2065	4

• When Using One-touch Bracket --> p.81

Protective height	Number of One-touch Brackets
0185 to 1105	2
1185 to 1585	3
1665 to 2065	4

Mounting Procedure

■ Using Top/Bottom Bracket only

1. Attach Top/Bottom Brackets and tighten them using the included hexagon socket head cap screws (M3 x 6). Tighten the hexagon socket head cap screws (M3 x 6) with the torque at 0.54 N•m (recommended). (Figure 1)

Loosen the hexagon socket head cap screws (M3 x 6), prepare brackets for backside or side mountings, and then lightly tighten them with the hexagon socket head cap screws (M3 x 6).

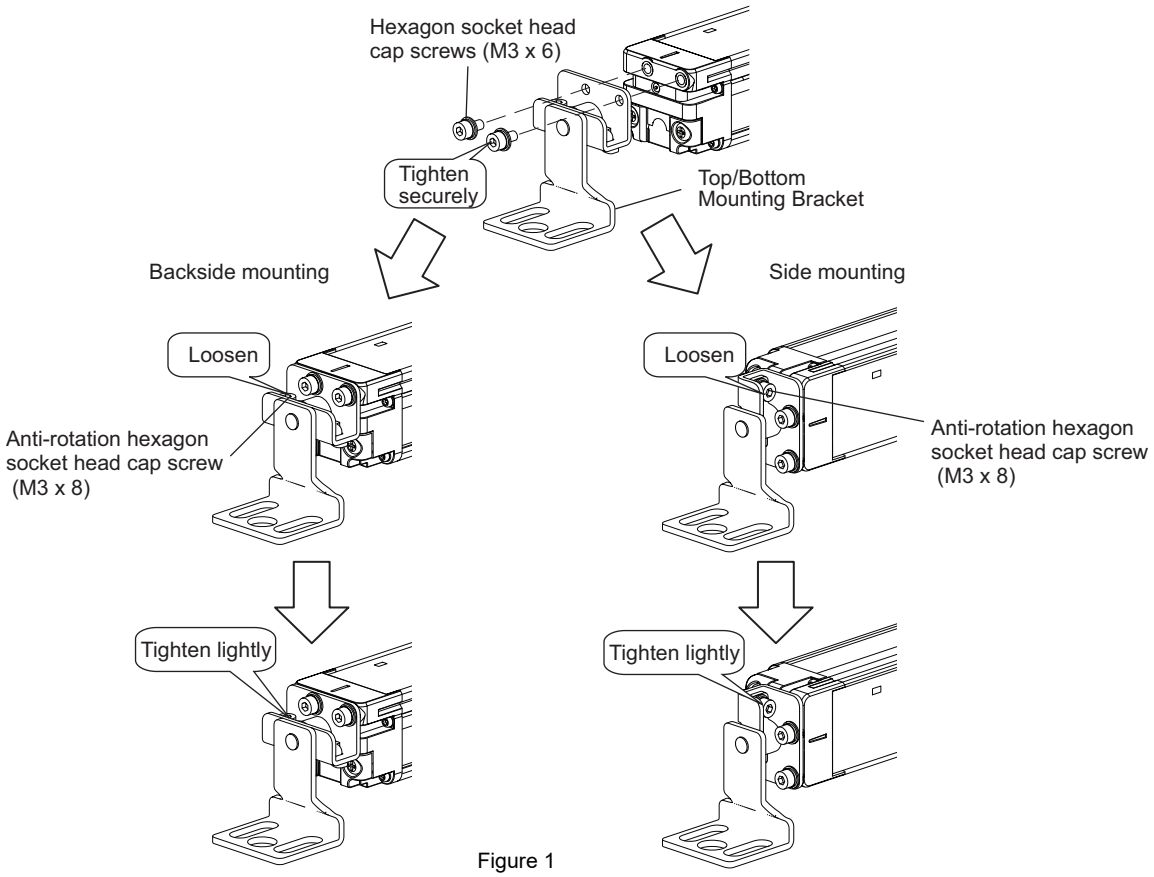

Figure 1

2. Adjust the Top/Bottom Brackets to the mounting position of the wall surface and then tighten them with screws. (Figure 2)

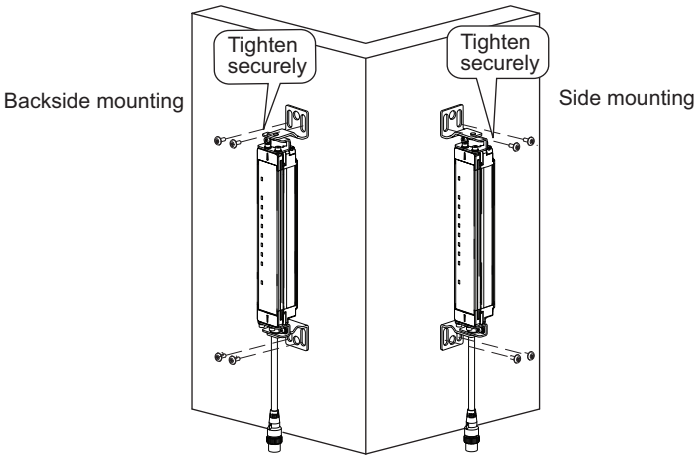

Figure 2

CHECK! Screws to mount the brackets to the wall are not included.

3. Turn ON the sensor to perform beam alignment.

Move the emitter from side to side (Figure 3) to align it to a center position where the stable-state indicator (STB) is turned ON while checking the top beam state and bottom beam state with the top-beam-state indicator (TOP) and bottom-beam-state indicator (BTM). (Figure 4)

Next, move the receiver from side to side (Figure 3) to align it to a center position where the stable-state indicator (STB) is turned ON. (Figure 4)

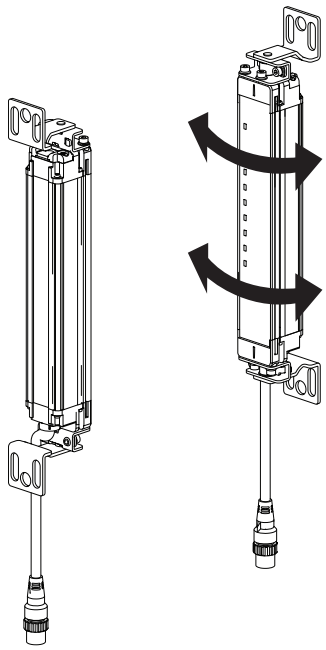

Figure 3

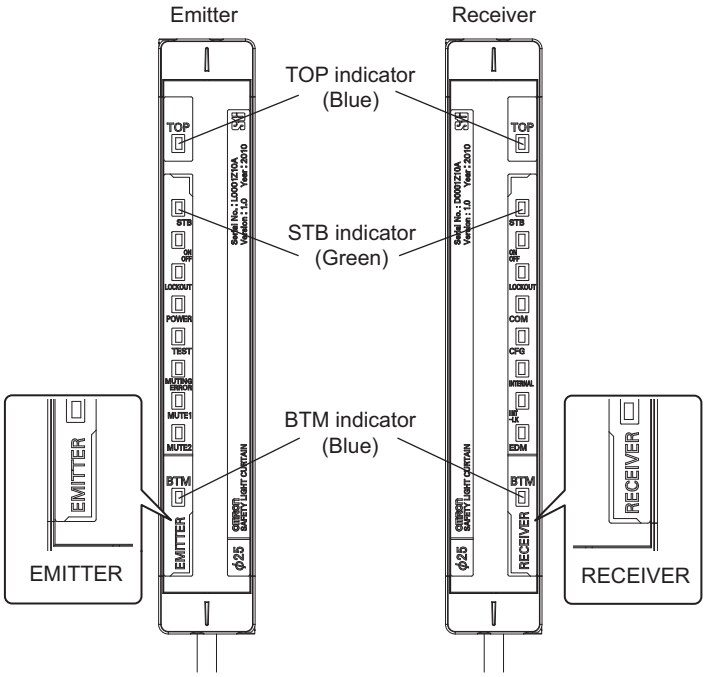

Figure 4

CHECK!

- Confirm that there is no interrupting object in the detection zone before adjusting beams.
- If the stable-state indicator (STB) does not turn ON despite performing alignment, check if the mounting surfaces of the emitter/receiver are parallel, and if the mounting height of the emitter/receiver is appropriate. Using optional Laser Alignment Kit (F39-PTJ) makes alignment easier.

4. Tighten the lightly tightened hexagon socket head cap screws (M3 x 6) of the Top/Bottom Brackets. (Figure 5)

Tighten the hexagon socket head cap screws (M3 x 6) with the torque at 0.54 N•m (recommended).

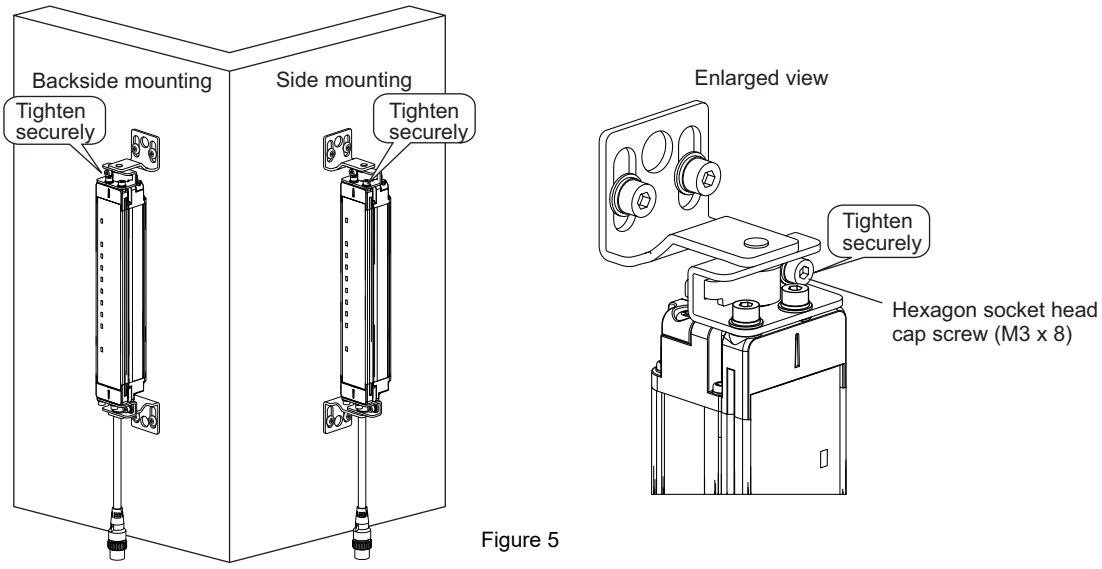

Figure 5

CHECK!

Tightening screws with a torque that considerably exceeds the recommended torque may cause failure.

Mounting is complete.

■ When Using Top/Bottom + Intermediate Brackets

1. Loosen the hexagon socket head cap screw (M3 x 18) of the intermediate bracket (3) and the hexagon socket head cap screw (M3 x 12) of the intermediate bracket (1) to be able to attach the bracket to the sensor case. (Figure 6 and 7)

The intermediate bracket has been assembled for backside mounting.

To use it for side mounting, remove the intermediate bracket (2) from the intermediate bracket (3) and change the direction of the bracket as shown in Fig.7.

Backside mounting

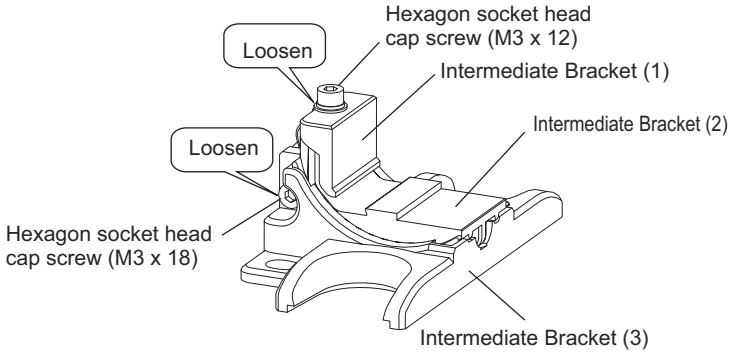

Figure 6

Side mounting

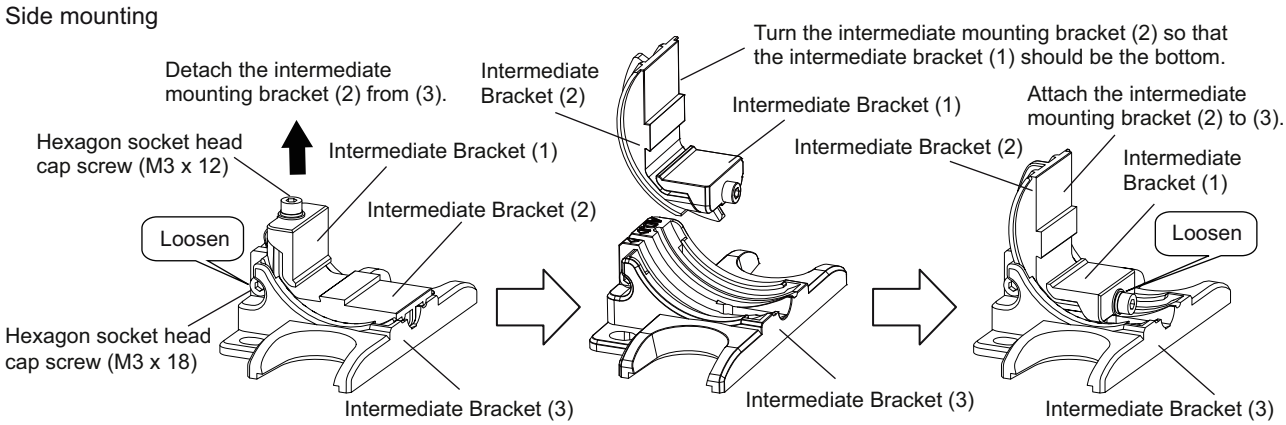

Figure 7

2. Mount the Intermediate Bracket to the case, and then lightly tighten the hexagon socket head cap screws (M3 x 12) of Intermediate Bracket (1). (Figure 8)

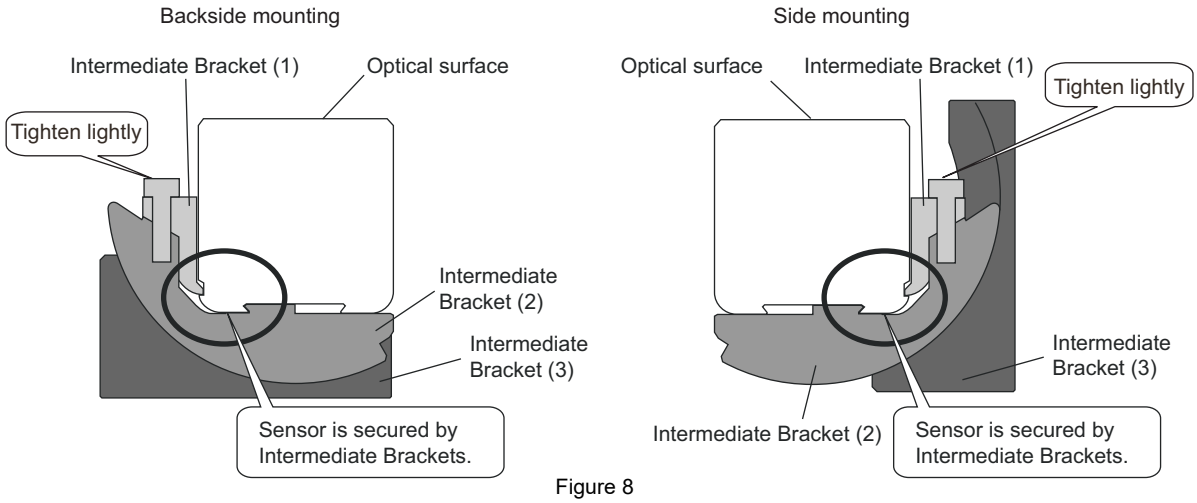

Figure 8

3. Attach a Top/Bottom Bracket and lightly tighten it using the included hexagon socket head cap screws (M3x6).
Tighten the hexagon socket head cap screws (M3 x 6) with the torque at 0.54 N•m (recommended).
Loosen the hexagon socket head cap screws (M3 x 6), prepare brackets for backside or side mountings, and then lightly tighten them with the hexagon socket head cap screws (M3 x 6). (Figure 9)

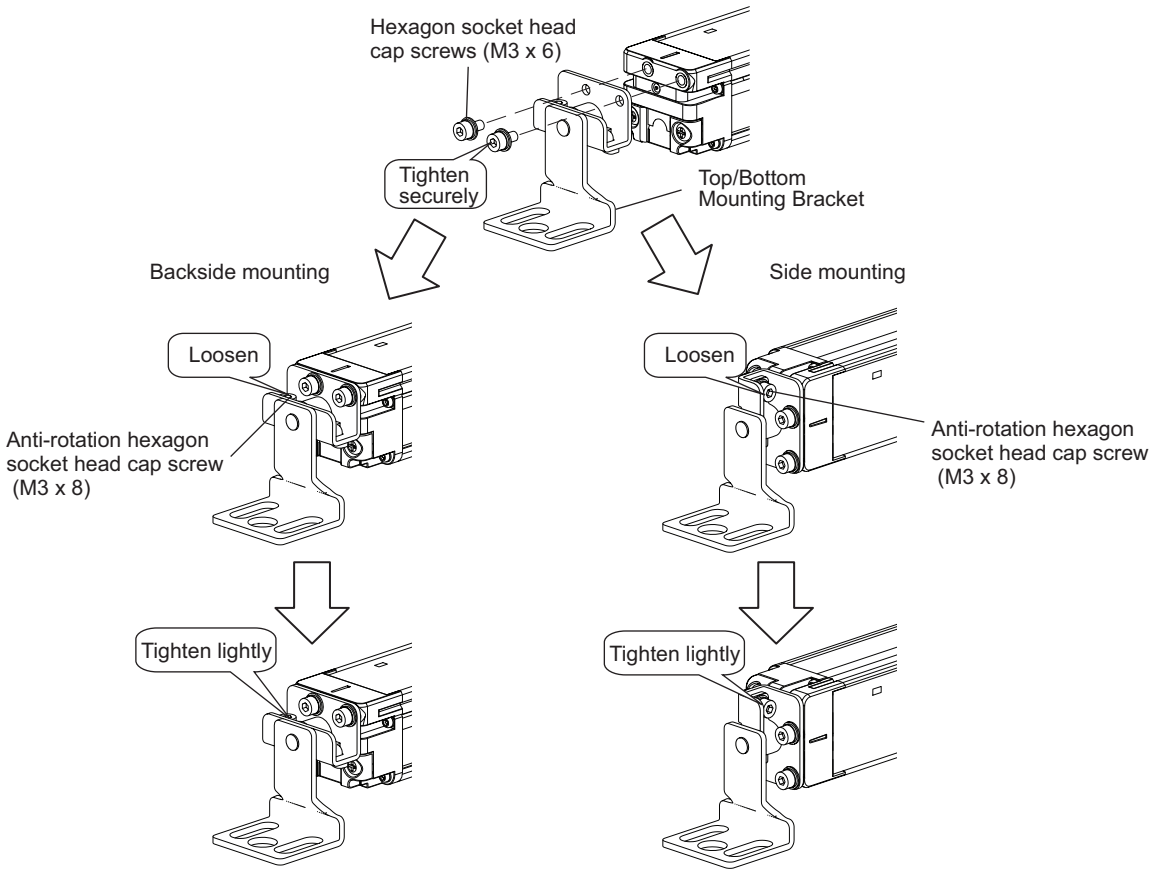

Figure 9

4. Position the Top/Bottom Brackets and the Intermediate Brackets to the mounting location on the wall and tighten the hexagon socket head cap screws (M3 x 12). (Figure 10)
Tighten the hexagon socket head cap screws (M3 x 12) with the torque at 0.54 N•m (recommended).

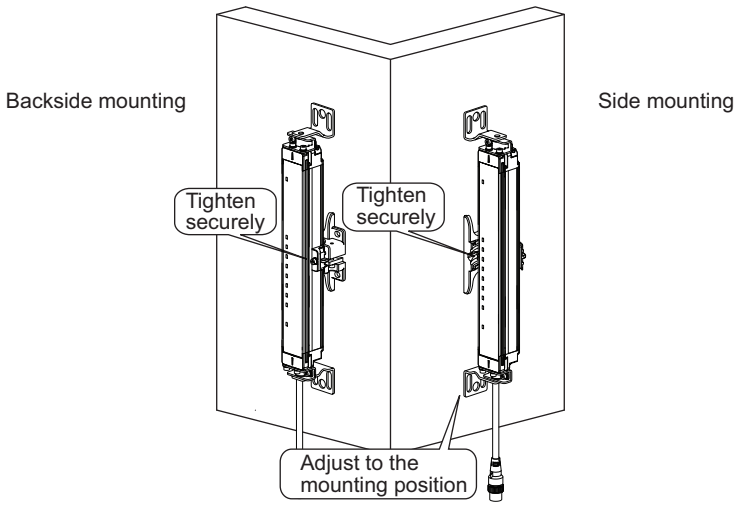

Figure 10

5. Tighten the screws to mount to the wall by the order of Top/Bottom and Intermediate Brackets. (Figure 11)

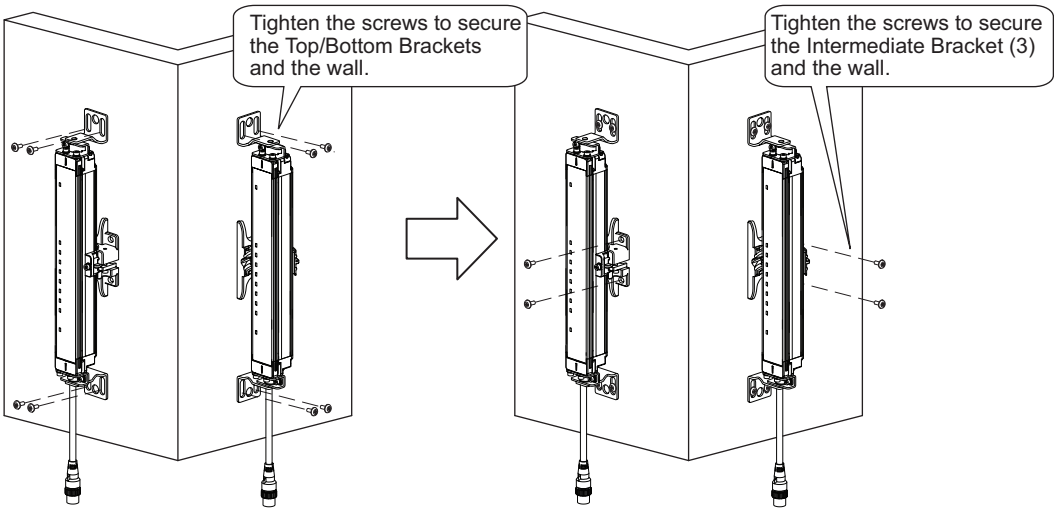

Figure 11

CHECK! Screws to mount the brackets to the wall are not included.

6. Turn ON the sensor to perform beam alignment.

Move the emitter from side to side (Figure 12) to align it to a center position where the stable-state indicator (STB) is turned ON while checking the top beam state and bottom beam state with the top-beam-state indicator (TOP) and bottom-beam-state indicator (BTM). (Figure 13)

Next, move the receiver from side to side to align it to a center position where the stable-state indicator (STB) is turned ON. (Figure 13)

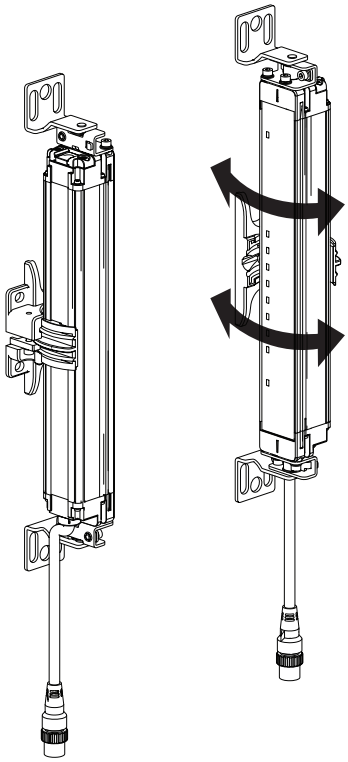

Figure 12

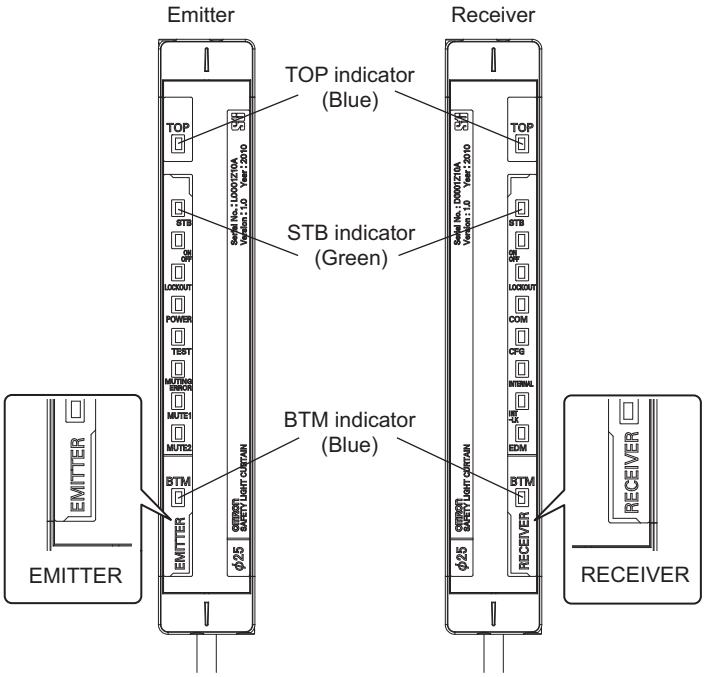

Figure 13

CHECK!
- Confirm that there is no interrupting object in the detection zone before adjusting beams.
- If the stable-state indicator (STB) does not turn ON despite performing alignment, check if the mounting surfaces of the emitter/receiver are parallel, and if the mounting height of the emitter/receiver is appropriate. Using optional Laser Alignment Kit (F39-PTJ) makes alignment easier.

7. Tighten the lightly tightened hexagon socket head cap screws (M3 x 6, M3 x 18) to prevent rotation of the Top/Bottom Brackets and Intermediate Bracket. (Figure 14)
Tighten the hexagon socket head cap screws (M3 x 6, M3 x 18) with the torque at 0.54 N•m (recommended).

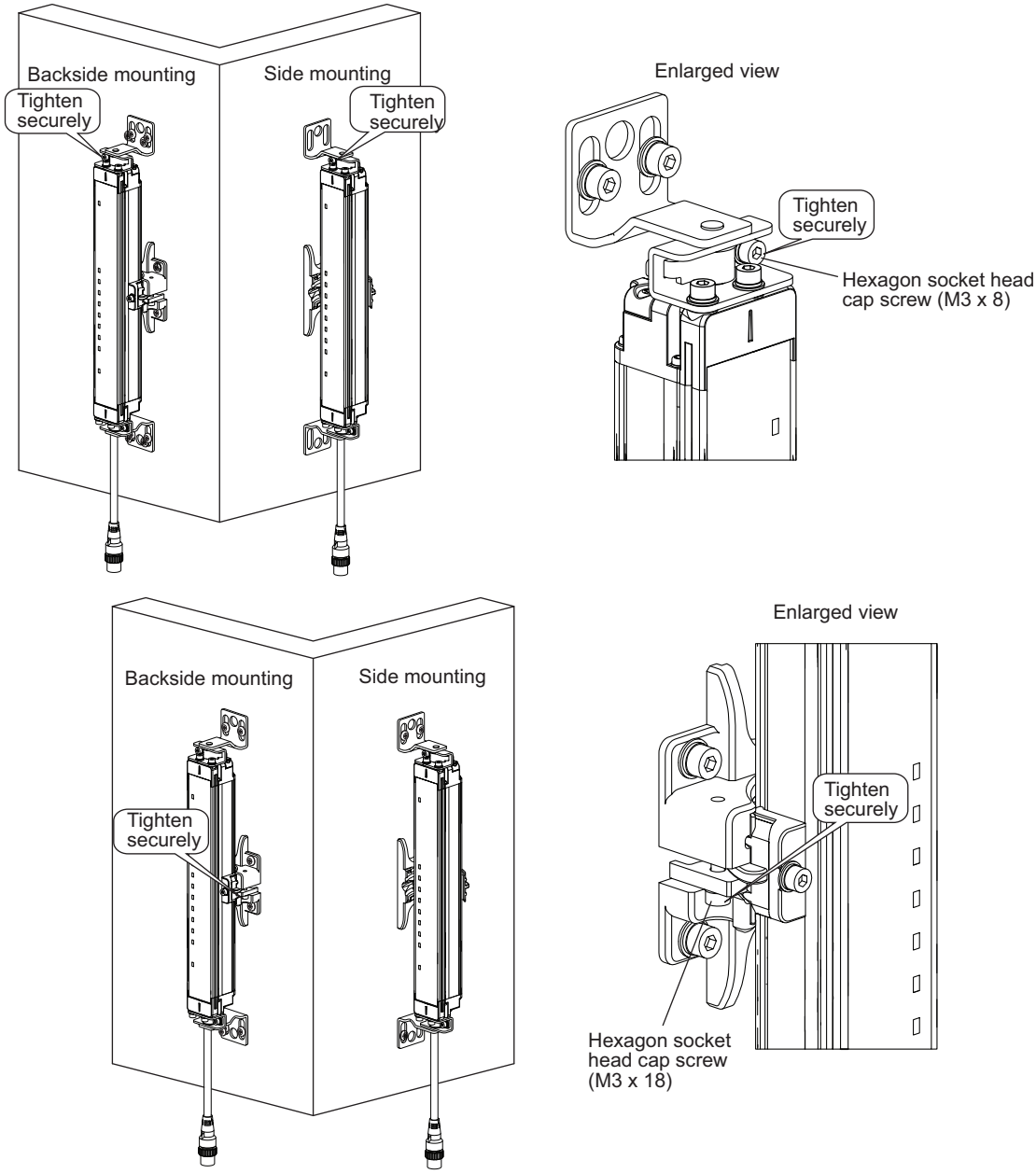

Figure 14

CHECK!

Tightening screws with a torque that considerably exceeds the recommended torque may cause failure.

Mounting is complete.

■ When using Intermediate Bracket (Free-Location Mounting)

1. Loosen the hexagon socket head cap screw (M3 x 18) of the intermediate bracket (3) and the hexagon socket head cap screw (M3 x 12) of the intermediate bracket (1) to be able to attach the bracket to the sensor case. (Figure 15 and 16)

The intermediate bracket has been assembled for backside mounting.

To use it for side mounting, remove the intermediate bracket (2) from the intermediate bracket (3) and change the direction of the bracket as shown in Fig.16.

Backside mounting

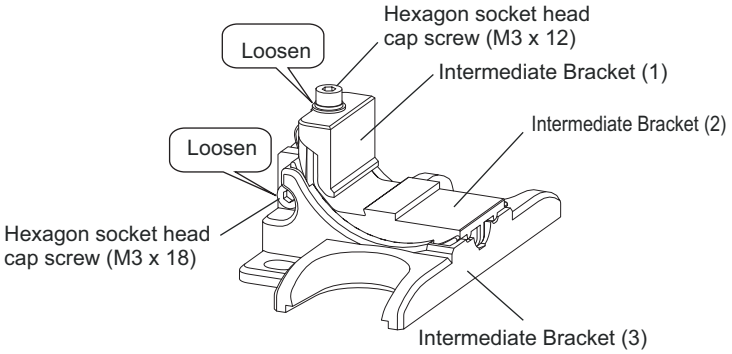

Figure 15

Side mounting

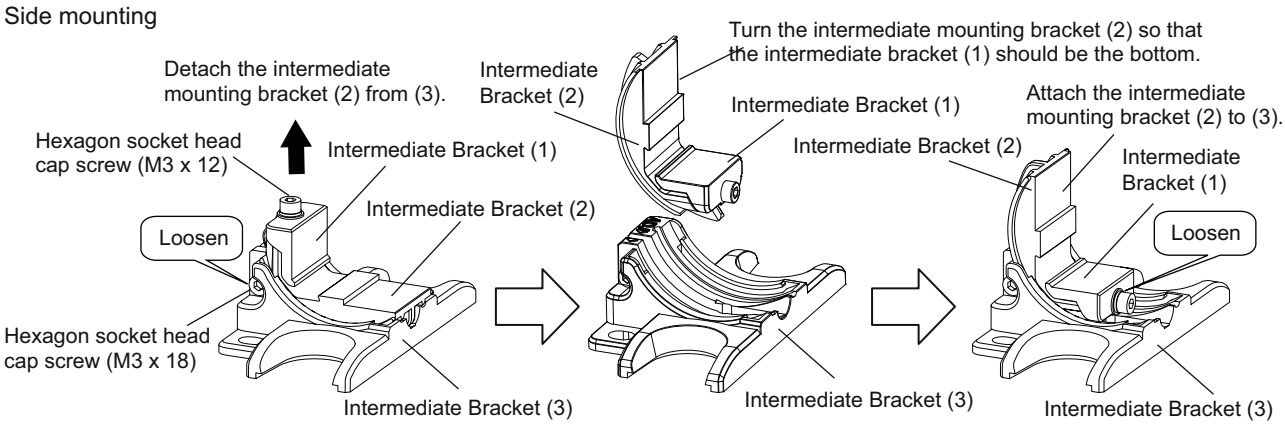

Figure 16

2. Mount the Intermediate Bracket to the case, and lightly tighten the hexagon socket head cap screws (M3 x 12) of Intermediate Bracket (1). (Figure 17)

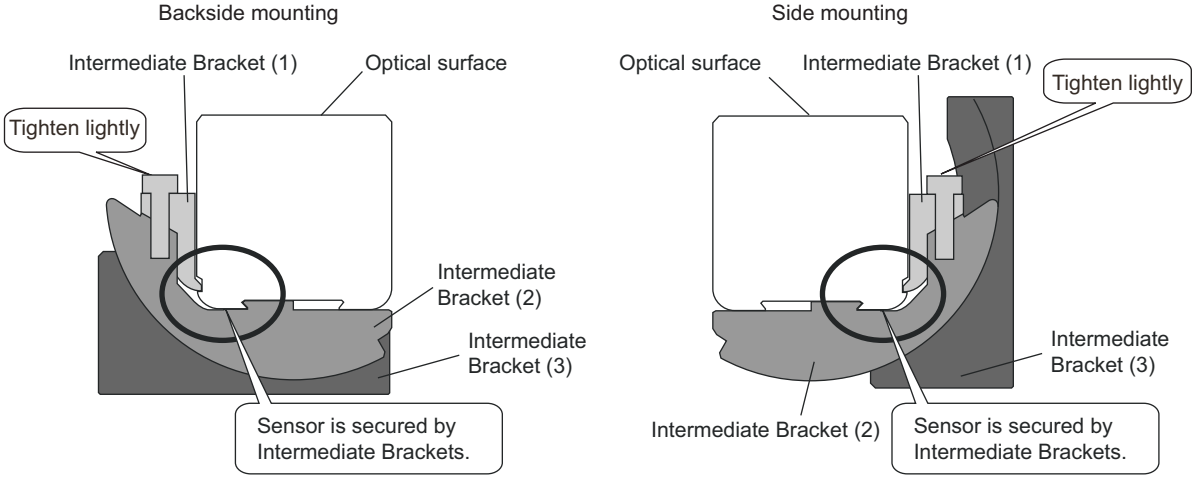

Figure 17

3. Slide the Intermediate Brackets to the mounting position of the wall. (Figure 18)

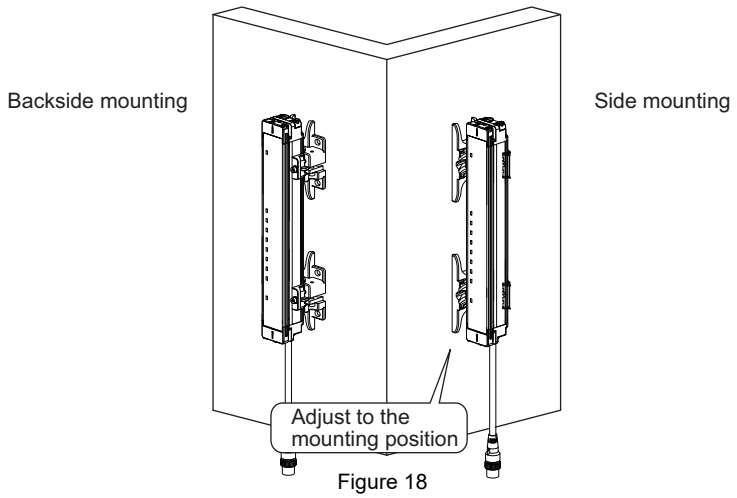

Figure 18

CHECK! Screws to mount the brackets to the wall are not included.

4. Tighten the screws that fix the Intermediate Bracket and the wall. (Figure 19)

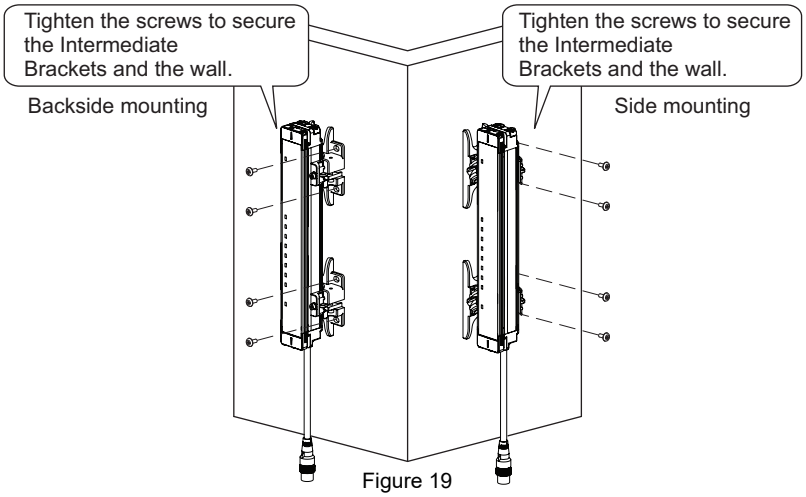

Figure 19

5. Tighten the hexagon socket head cap screw (M3 x 12) of Intermediate Bracket (1) with the tightening torque at 0.54 N•m (recommended). (Figure 20)

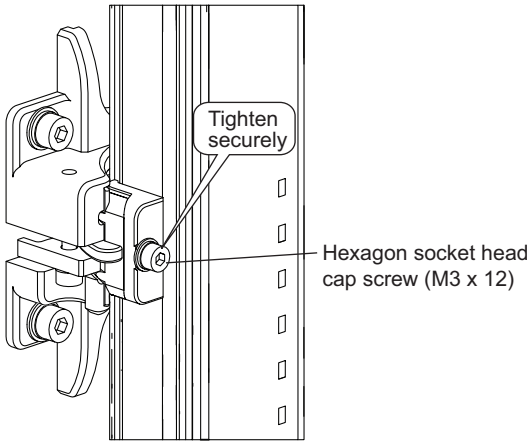

Figure 20

CHECK! Tightening screws with a torque that considerably exceeds the recommended torque may cause failure.

6. Turn ON the sensor to perform beam alignment.
Move the emitter from side to side (Figure 21) to align it to a center position where the stable-state indicator (STB) is turned ON while checking the top beam state and bottom beam state with the top-beam-state indicator (TOP) and bottom-beam-state indicator (BTM). (Figure 22)
Next, move the receiver from side to side (Figure 21) to align it to a center position where the stable-state indicator (STB) is turned ON. (Figure 22)

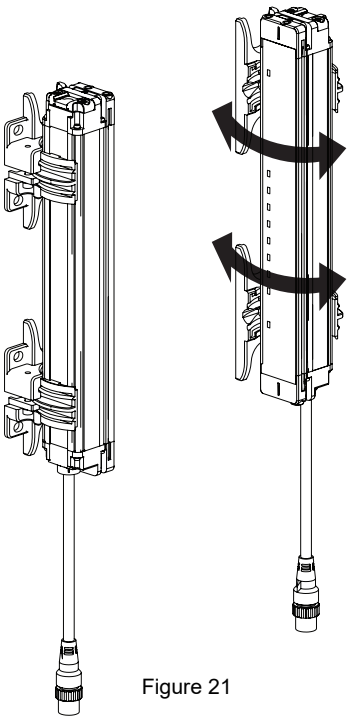

Figure 21

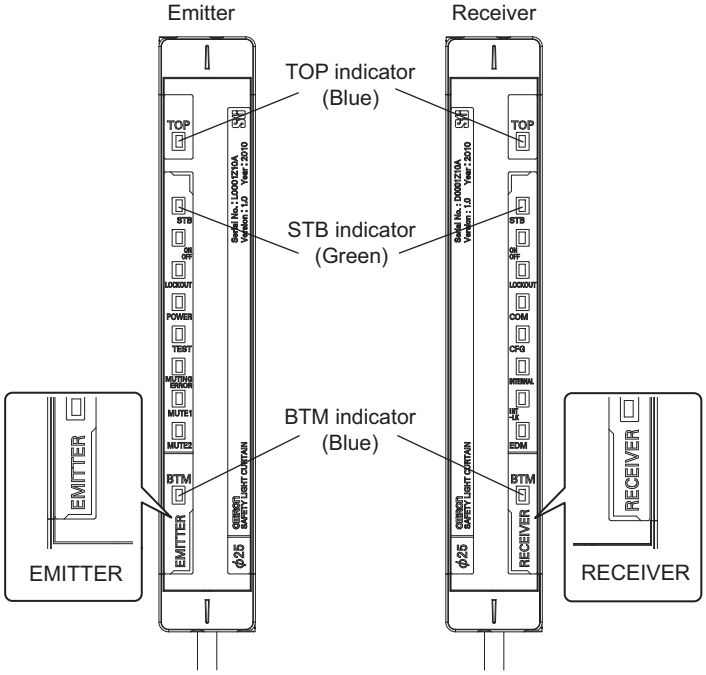

Figure 22

CHECK!
- Confirm that there is no interrupting object in the detection zone before adjusting beams.
- If the stable-state indicator (STB) does not turn ON despite performing alignment, check if the mounting surfaces of the emitter/receiver are parallel, and if the mounting height of the emitter/receiver is appropriate. Using optional Laser Alignment Kit (F39-PTJ) makes alignment easier.

7. Tighten the lightly tightened the hexagon socket head cap screws (M3 x 18) of Intermediate Bracket (3) to prevent rotation. (Figure 23)
If there are three or more Intermediate Brackets, tighten the hexagon socket head cap screws (M3 x 18) from the order of top, bottom and middle brackets with a tightening torque at 0.54 N•m (recommended).

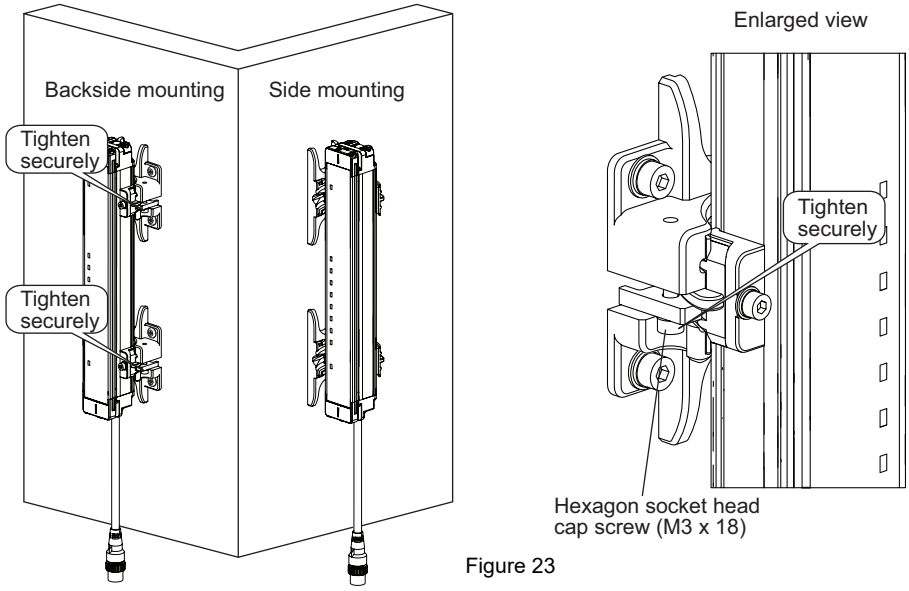

Figure 23

CHECK!
Tightening screws with a torque that considerably exceeds the recommended torque may cause failure.

Mounting is complete.

■ When using One-touch Bracket

<Precautions on mounting the sensor using One-touch Brackets>

When using two One-touch Brackets to mount a sensor, the combination of One-touch M6 Bracket (or One-touch M8 Bracket) and Intermediate Bracket at the both ends of the sensor must be positioned opposite each other. When using three or more Brackets, One-touch M6 Brackets (or One-touch M8 Brackets) and Intermediate Brackets at other positions than the both ends must be in the same orientation.

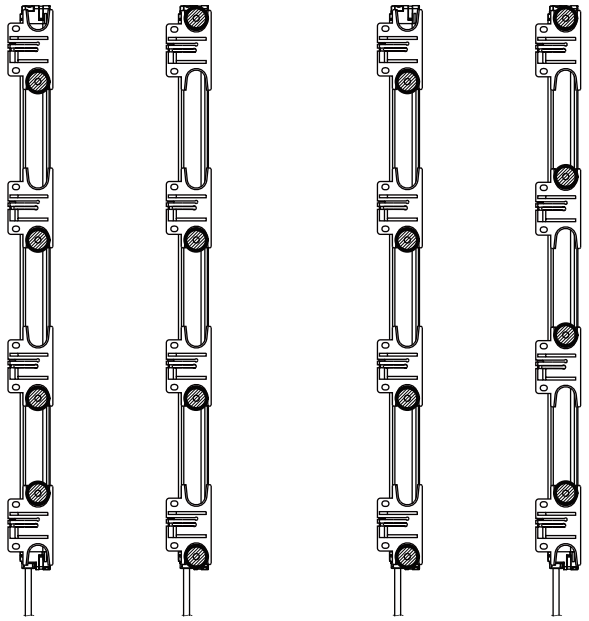

(Good example 1) (Good example 2) (Bad example 1) (Bad example 2)

Mount One-touch M6 Brackets (or One-touch M8 Brackets) according to the mounting positions of the emitter and receiver. The positions of Intermediate Brackets mounted to the emitter and receiver must be aligned with each other.

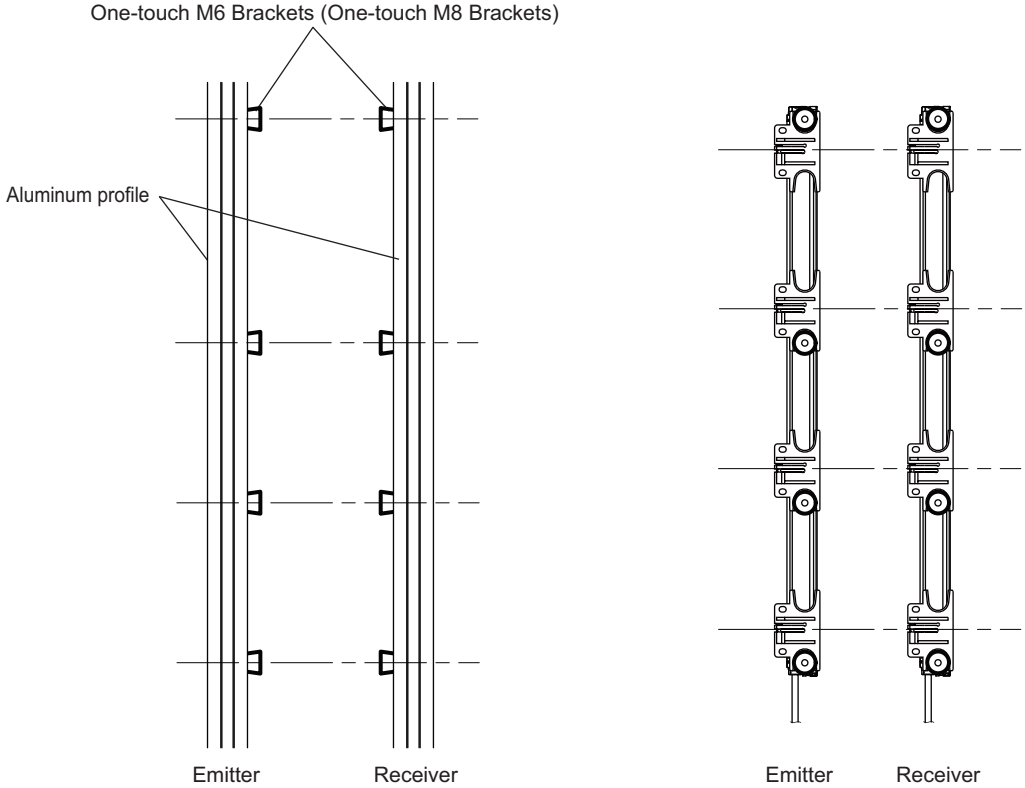

<Side view of the aluminum profile to be mounted> <Position of the bracket to be mounted to the sensor>

1. Loosen the hexagon socket head cap screw (M3 x 18) of the intermediate bracket (3) and the hexagon socket head cap screw (M3 x 12) of the intermediate bracket (1) to be able to attach the bracket to the sensor case. (Figure 24 and 25)
The intermediate bracket has been assembled for backside mounting.
To use it for side mounting, remove the intermediate bracket (2) from the intermediate bracket (3) and change the direction of the bracket as shown in Fig.25.

Backside mounting

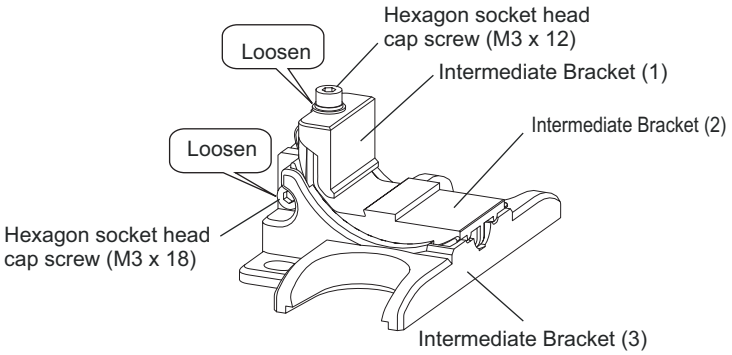

Figure 24

Side mounting

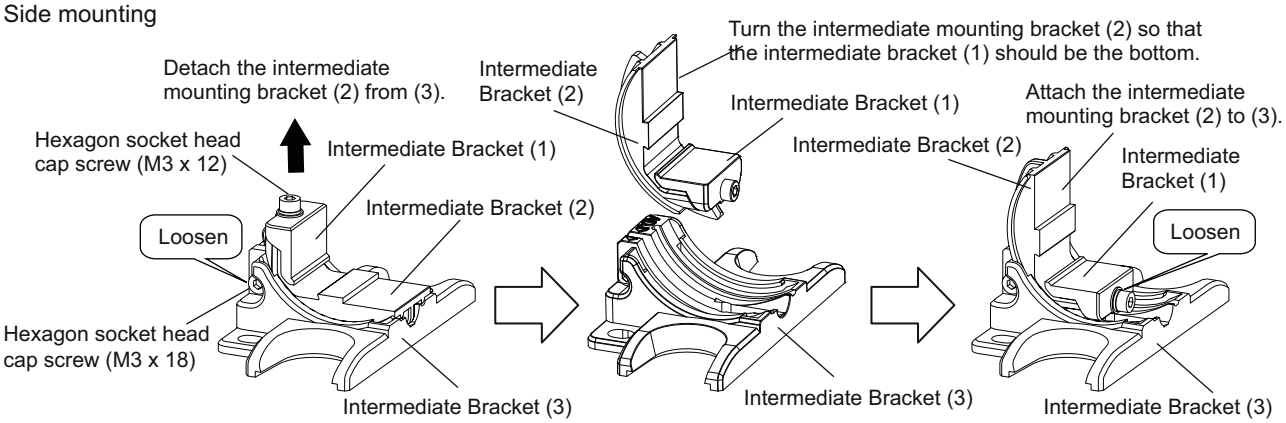

Figure 25

2. Mount the Intermediate Bracket to the case, and lightly tighten the hexagon socket head cap screw (M3 x 12) of Intermediate Bracket (1). (Figure 26)

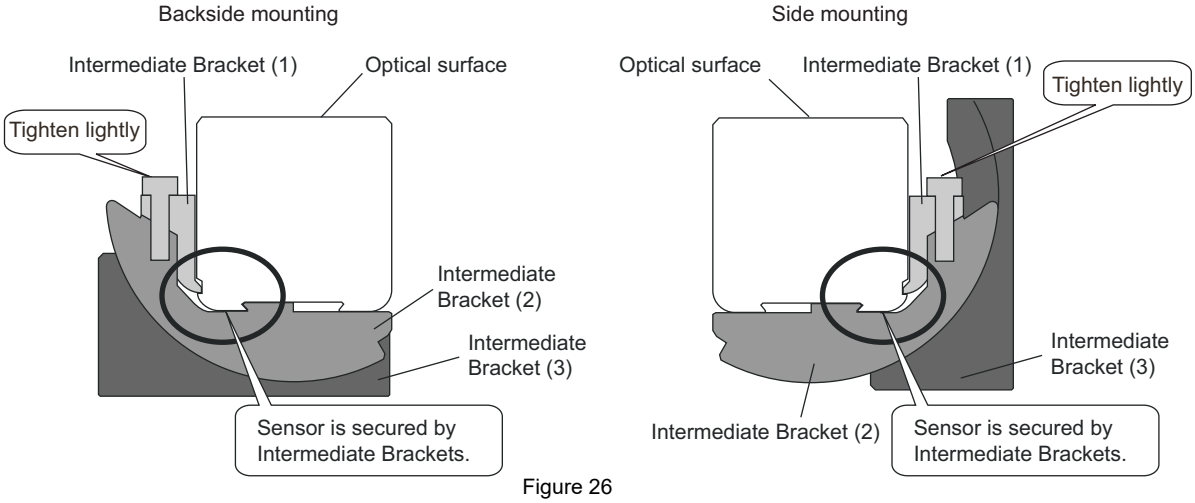

Figure 26

3. Mount One-touch M6 Brackets (or M8 Brackets) to the aluminum profile according to the position where the sensor is mounted. The positions of One-touch M6 Brackets (or M8 Brackets) mounted to the emitter and receiver must be aligned with each other. To mount Brackets to the aluminum profile, insert a T-slide nut into the profile in advance with the recommended tightening torque of 11.0 N•m.
The T-slide nut is user provided. Using the T-slide nut makes the mounting work easier.

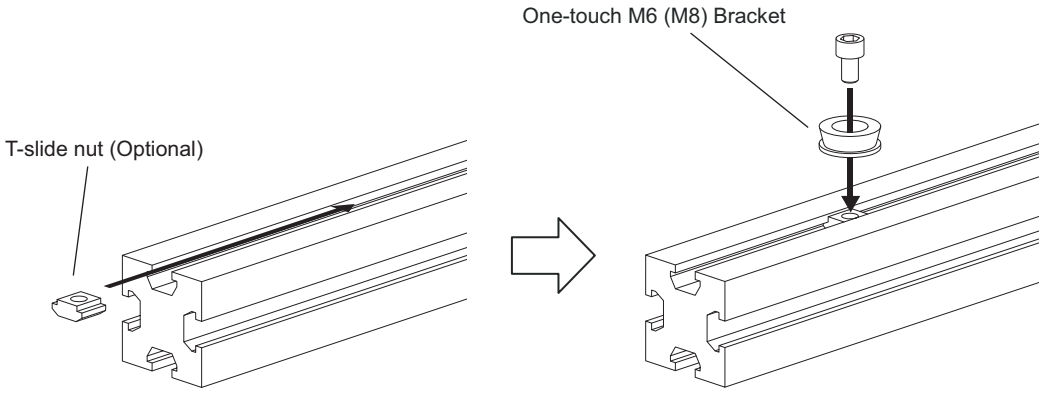

Figure 27

4. The positions of Intermediate Brackets mounted to the emitter and receiver must be aligned with each other.
Tighten the hexagon socket head cap screws (M3 x 12) of Intermediate Bracket (1) to secure the sensor. (Figure 28)
Insert the Intermediate Bracket, which has been mounted at the bottom of the sensor, into the One-touch M6 Bracket (or One-touch M8 Bracket) mounted to the aluminum profile. (Figure 28)
Tighten the hexagon socket head cap screws(M3 x 12) with the tightening torque at 0.54 N•m (recommended).

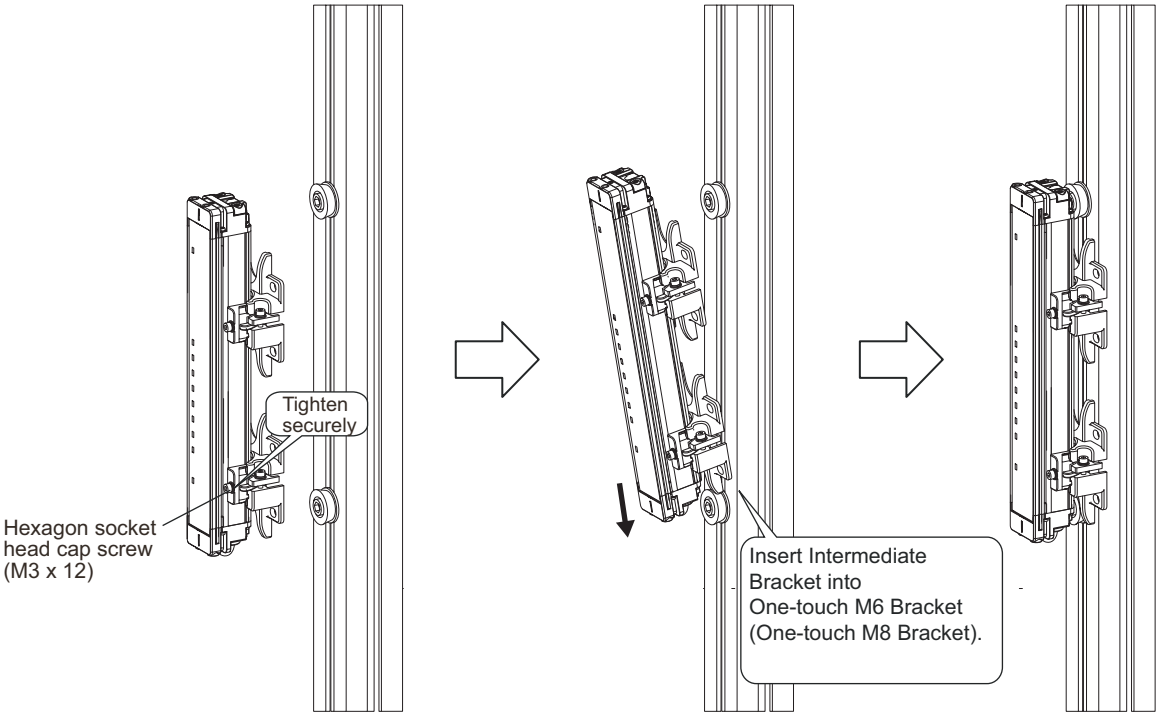

Figure 28

5. Slide the Intermediate Bracket mounted at the top of the sensor to insert it into the One-touch M6 Bracket (or One-touch M8 Bracket) mounted to the aluminum profile, and then tighten the hexagon socket head cap screws (M3 x 12) on Intermediate Bracket (1) to secure the sensor. (Figure 29)
Tighten the hexagon socket head cap screws (M3 x 12) with the torque at 0.54 N•m (recommended).

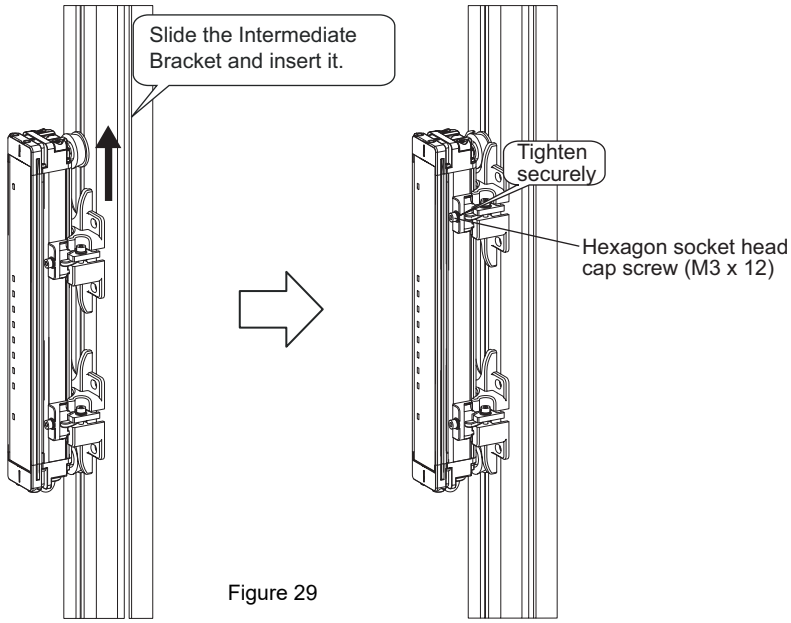

Figure 29

CHECK!

Tap the Intermediate Bracket lightly with plastic hammer to the One-touch M6 Bracket (or One-touch M8 Bracket) to maintain stable mounting state.
Do not tap areas other than indicated in the figure.

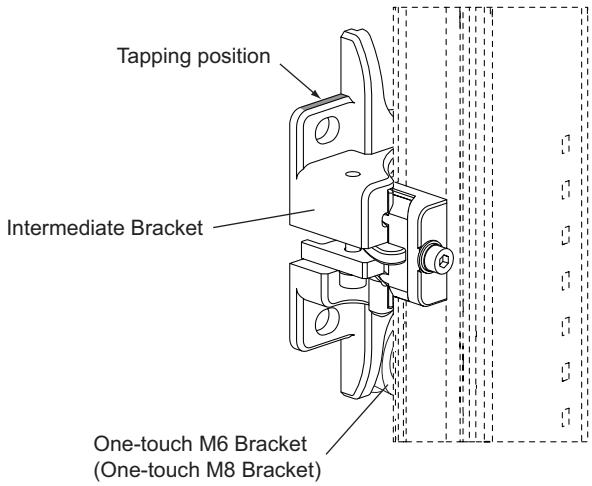

6. Turn ON the sensor to perform beam alignment.
Move the emitter from side to side (Figure 30) to align it to a center position where the stable-state indicator (STB) is turned ON while checking the top beam state and bottom beam state with the top-beam-state indicator (TOP) and bottom-beam-state indicator (BTM). (Figure 31)
Next, move the receiver from side to side (Figure 30) to align it to a center position where the stable-state indicator (STB) is turned ON. (Figure 31)

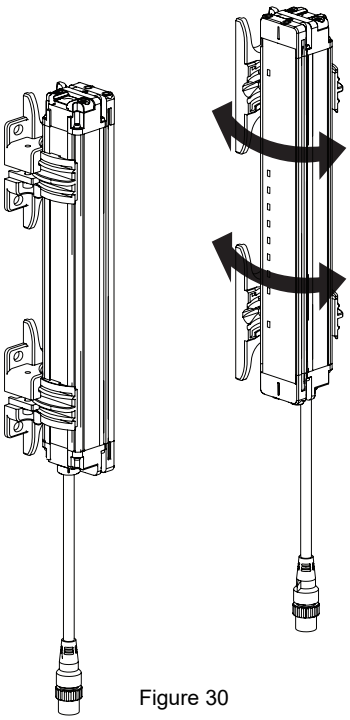

Figure 30

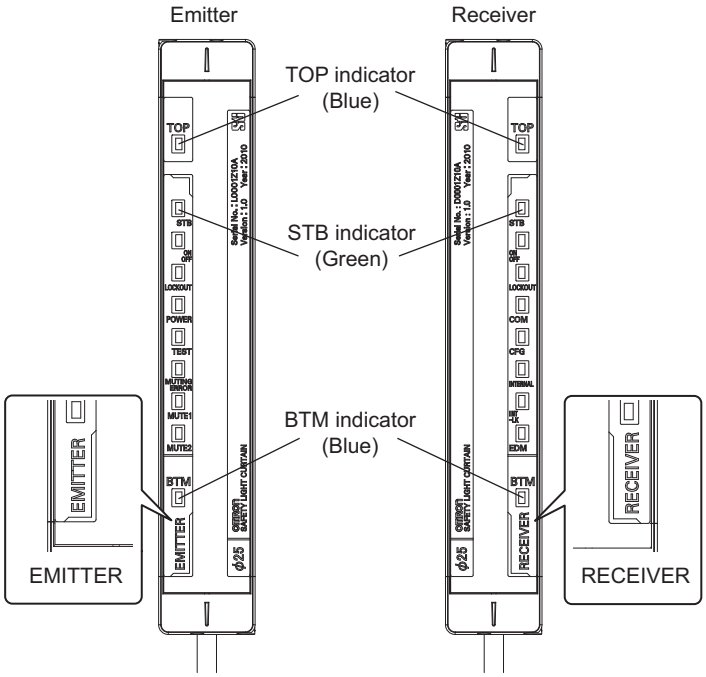

Figure 31

CHECK!
- Confirm that there is no interrupting object in the detection zone before adjusting beams.
- If the stable-state indicator (STB) does not turn ON despite performing alignment, check if the mounting surfaces of the emitter/receiver are parallel, and if the mounting height of the emitter/receiver is appropriate. Using optional Laser Alignment Kit (F39-PTJ) makes alignment easier.

7. Tighten two hexagon socket head cap screws (M3 x 18) on Intermediate Bracket (3) to prevent rotation. (Figure 32)
Tighten the hexagon socket head cap screws (M3 x 18) with the torque at 0.54 N•m (recommended).

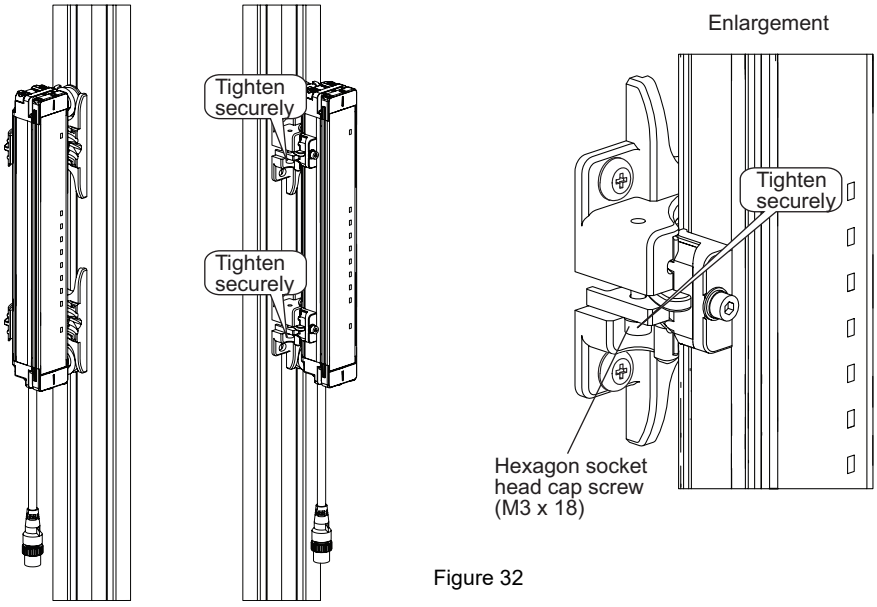

Figure 32

CHECK!
Securing the sensor with a torque that significantly exceeds the recommended value may result in failure.

Mounting is complete.

Wiring

Wiring Precautions

⚠ WARNING

Apply double or enhanced insulation from hazardous voltage to all input and output lines.
Failure to do so may result in electric shock.

Connect the load between the output and +24 V line (NPN output).
Connecting the load between the output and 0 V line will result in a dangerous condition because operation is reversed to "ON when blocked".

Do not short-circuit the output line to the 0 V line.
Otherwise, the output is always ON. Also, the +24 V of the power supply must be grounded so that output does not turn ON due to grounding of the output line.

Configure the system by using the optimal number of safety outputs that satisfy the requirements of the necessary safety category.

Do not connect each line of F3SJ-E/B to a DC power supply higher than 24 V+20%. Also, do not connect to an AC power supply.
Failure to do so may result in electric shock or breakdown of the device.

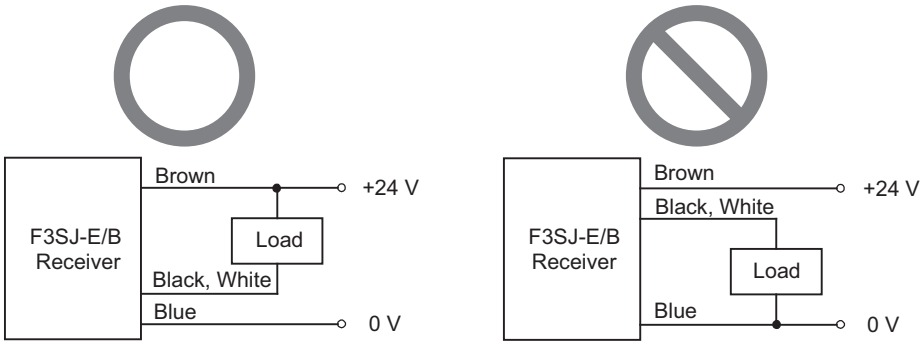

Power Supply Unit

⚠ WARNING

For the F3SJ-E/B to comply with IEC 61496-1 and UL 508, the DC power supply unit must satisfy all of the following conditions:

- Must be within the rated power voltage (24 VDC±20%)
- Must have tolerance against total rated current of devices if it is connected to multiple devices
- Must comply with EMC directives (industrial environment)
- Double or enhanced insulation must be applied between the primary and secondary circuits
- Automatic recovery of overcurrent protection characteristics
- Output holding time must be 20 ms or longer
- Must satisfy output characteristic requirements for class 2 circuit or limited voltage current circuit defined by UL 508 (Refer to remarks)
- Must comply with laws and regulations, regarding EMC and electrical equipment safety, of the country or region where the F3SJ-E/B is used (Ex: In EU, the power supply must comply to the EMC Directive and the Low Voltage Directive.)

(Remarks)

To prevent a fire, the secondary circuit of the power supply must satisfy either of the following conditions in accordance with UL 508:

- As with secondary winding of isolation transformer, there must be a limited current voltage circuit to which isolated power supply provides power, and the "current is limited to 8 A max. (including short-circuit)" or "circuit protection such as a fuse is used to limit the current, which has a rating of 4.2 A max." (24 VDC power supply).
  Recommended power supply: OMRON S8VS (30 W, 60 W)
  These products are approved by UL listing (UL 508, class 2 power supply), CE marking compatible (EMC/Low Voltage Directive).
- Class 2 power supply unit complying with UL 1310, or a circuit using class 2 transformer complying with UL 1585 as a power supply.

Wiring Method (Easy Type)

Directly wire the single-ended cable that is routed from the sensor.

<F3SJ cable> (The figure shown below is the cable for the emitter.)

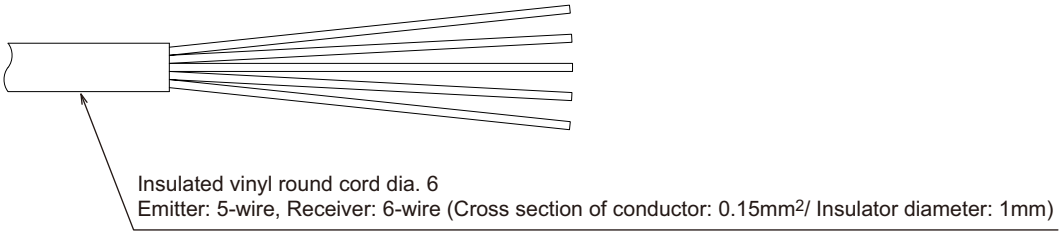

To extend the cable, the following specifications must be satisfied.

<Extension cable>

Refer to "<Extension cable>" on page 91.

Wiring Method (Basic Type)

Perform wiring according to the following procedure.

1. Connect an emitter cable (F39-JD□□-L, gray, sold separately) to the emitter's connection cable (gray).

2. Connect a receiver cable (F39-JD□□-D, black, sold separately) to the receiver's connection cable (black).

3. Connect the +24 V line of the power supply directly to the protective earth (PE).

■ Single-ended connector cable (F39-JD□A, sold separately)

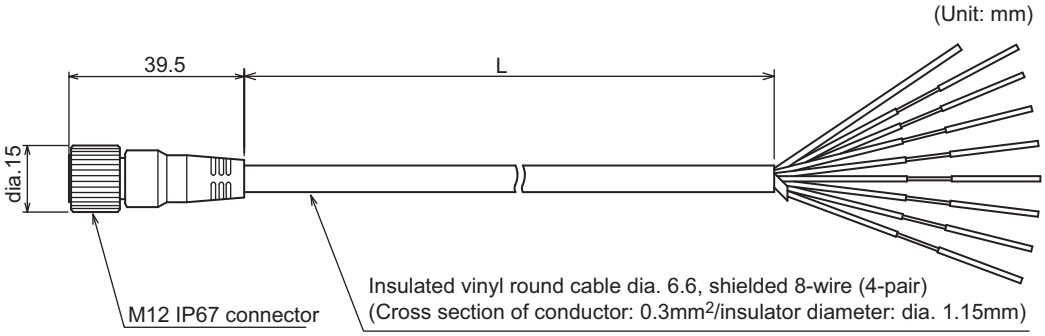

Set model name	Emitter cable		Receiver cable		L (mm)
F39-JD3A	F39-JD3A-L	Gray cable	F39-JD3A-D	Black cable	3000
F39-JD7A	F39-JD7A-L		F39-JD7A-D		7000
F39-JD10A	F39-JD10A-L		F39-JD10A-D		10000
F39-JD15A	F39-JD15A-L		F39-JD15A-D		15000
F39-JD20A	F39-JD20A-L		F39-JD20A-D		20000

<Internal wiring diagram> (F39-JD□A-L, F39-JD□A-D)

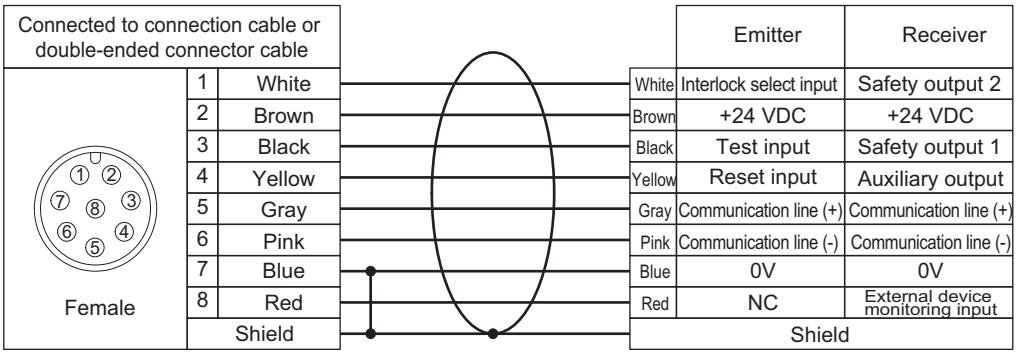

Twisted pair wires are white and red, brown and blue, black and yellow, and gray and pink

■ Double-ended connector cable: Cable for extension and for connection to F3SP-B1P (F39-JD□B, sold separately)

(Unit: mm)

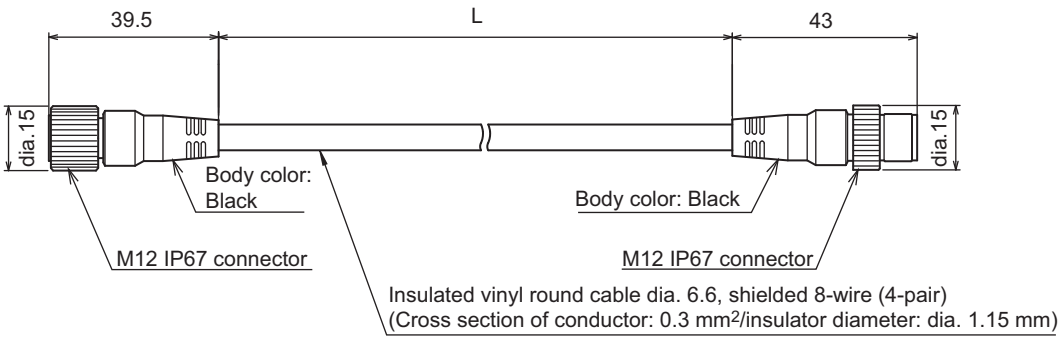

Set model name	Emitter cable		Receiver cable		L (mm)
F39-JDR5B	F39-JDR5B-L	Gray cable	F39-JDR15B-D	Black cable	500
F39-JD1B	F39-JD1B-L		F39-JD1B-D		1000
F39-JD3B	F39-JD3B-L		F39-JD3B-D		3000
F39-JD5B	F39-JD5B-L		F39-JD5B-D		5000
F39-JD7B	F39-JD7B-L		F39-JD7B-D		7000
F39-JD10B	F39-JD10B-L		F39-JD10B-D		10000
F39-JD15B	F39-JD15B-L		F39-JD15B-D		15000
F39-JD20B	F39-JD20B-L		F39-JD20B-D		20000

<Internal wiring diagram> (F39-JD□B-L, F39-JD□B-D)

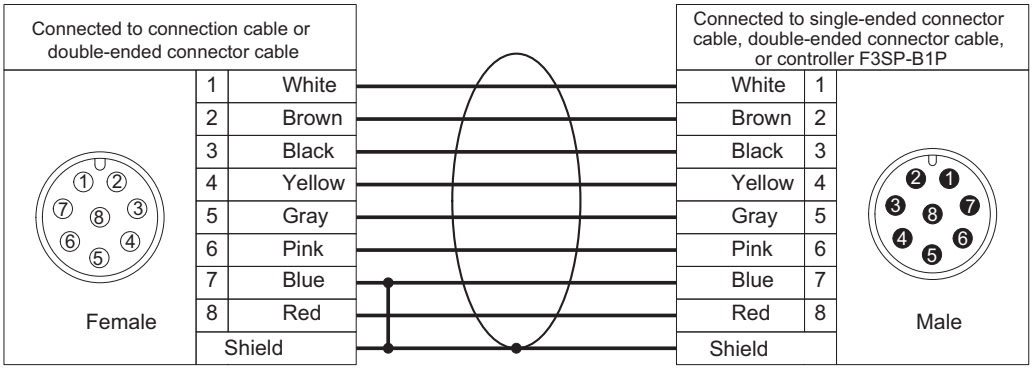

Twisted pair wires are white and red, brown and blue, black and yellow, and gray and pink

If the length of the F39-JD□A single-ended connector cable is insufficient, use 1 or more F39-JD□B double-end connector cables to extend the length, as required. The total cable extension length must be 30 m max.

<Connection example>

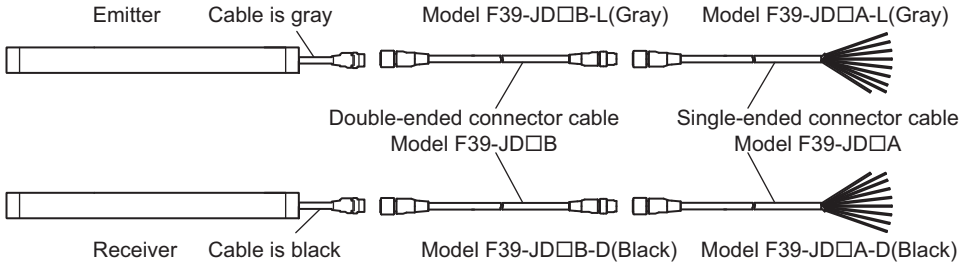

■ Simple Wiring Connector System

A combination of a double-ended cable for an emitter (F39-JD□B-L), a single-ended cable for a receiver (F39-JD□A-D), and a simple wiring connector (optional: F39-CN5) can be used for a simple wiring system.

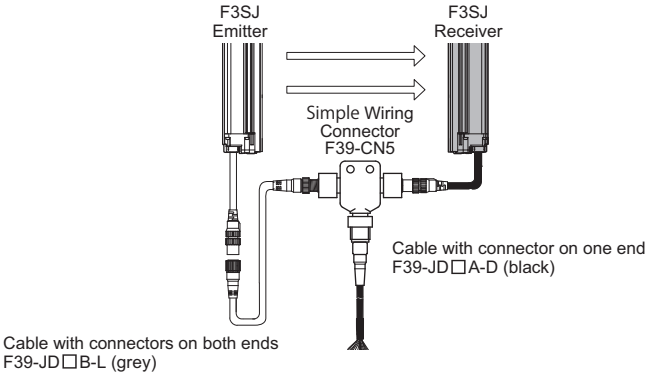

■ Cable for simple wiring (optional: F39-JD□BA)

A set of two cables; a double-ended cable for an emitter (F39-JD□B) and a single-ended cable for a receiver (F39-JD□A-D). Used in combination with a simple wiring connector (optional: F39-CN5).
See the following page for details of a double-ended cable for an emitter (F39-JD□B-L) and a single-ended cable for a receiver (F39-JD□A-D).

Double-ended connector cable p. 89

Single-ended connector cable p. 88

The cable can be used by connecting it to the F39-JD□B-L Double-end Connector Cable for emitter to the receiver.
For wiring, refer to the following page.

Using a simple wiring connector for F3SJ-B p. 103

■ Simple wiring connector (optional: F39-CN5)

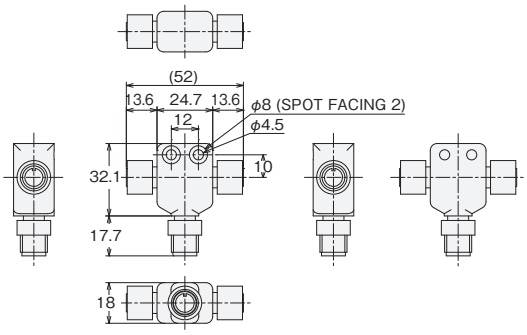

Internal Wiring Diagram (Optional: F39-CN5)

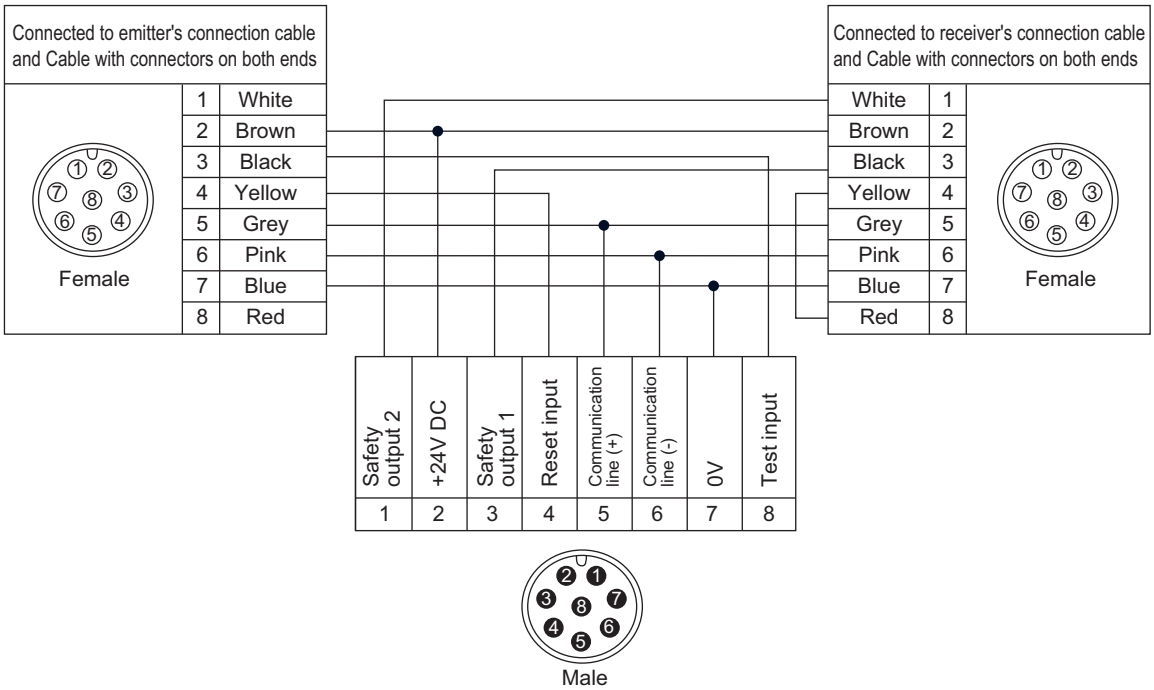

When you need to use a cable that is not specified by OMRON, use a cable that satisfies the following specifications.

<Extension cable>

Easy Type

1. Emitter : 5-wire (0.12 mm^2 or larger x 1 pair, 0.12 mm^2 or larger x 3, conductor resistance 0.146 ohms/m max.)
   Receiver : 6-wire (0.12 mm^2 or larger x 3 pairs, conductor resistance 0.146 ohms/m max.)
2. Emitter : Communication lines (+) and (-) must be used as twisted-pair lines.
   Receiver : Communication lines (+) and (-), safety output lines 1 and 2 must be used as twisted-pair lines.

Basic Type

1. 8-wire (0.3 mm^2 or larger x 4 pairs, conductor resistance 0.058 ohms/m max.)
2. Braided shield
3. Connect the pin No. 7 with the shield line.
4. Communication lines (+) and (-), 24 V and 0 V lines must be used as twisted-pair lines.

CHECK!

Do not use cables in the same conduit as high voltage or electric power lines.

Chapter4 Input/Output Circuit and Applications

Input/Output Circuit	94
Easy Type	94
Basic Type	95
Wiring Examples	96
Using F3SJ-E Only	96
Using F3SJ-B Only	97
Connecting a F3SJ-E to Various Controllers	99
Connecting a F3SJ-B to Two Muting Sensors	100
Connecting a F3SJ-B to Four Muting Sensors	101
Connecting a F3SJ-B to Various Controllers	102
Using a simple wiring connector for F3SJ-B	103

Input/Output Circuit

Easy Type

■ Entire circuit diagram

The entire circuit diagram of the Easy Type is shown below.

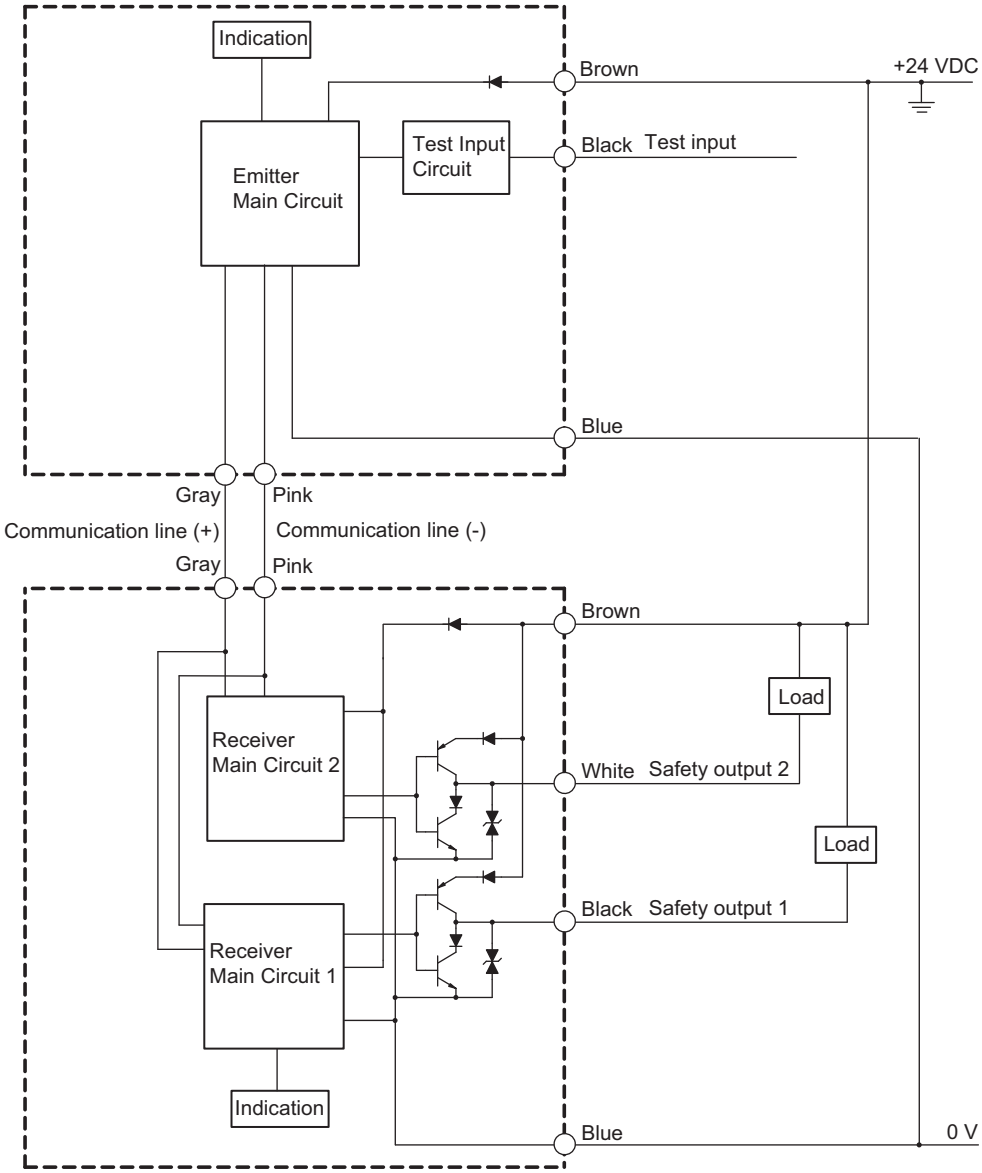

■ Input circuit diagram by function

The input circuit diagram of the Easy Type by function is shown below.

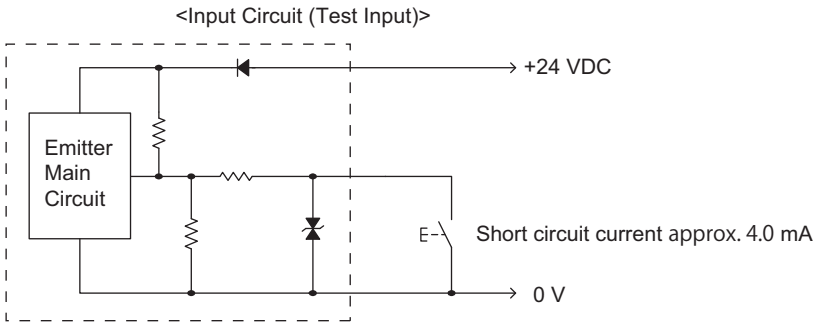

Basic Type

■ Entire circuit diagram

The entire circuit diagram of the Basic Type is shown below.

The numbers in the circles indicate the connector's pin numbers.

The names in the brackets [ ] indicate signal names for muting system.

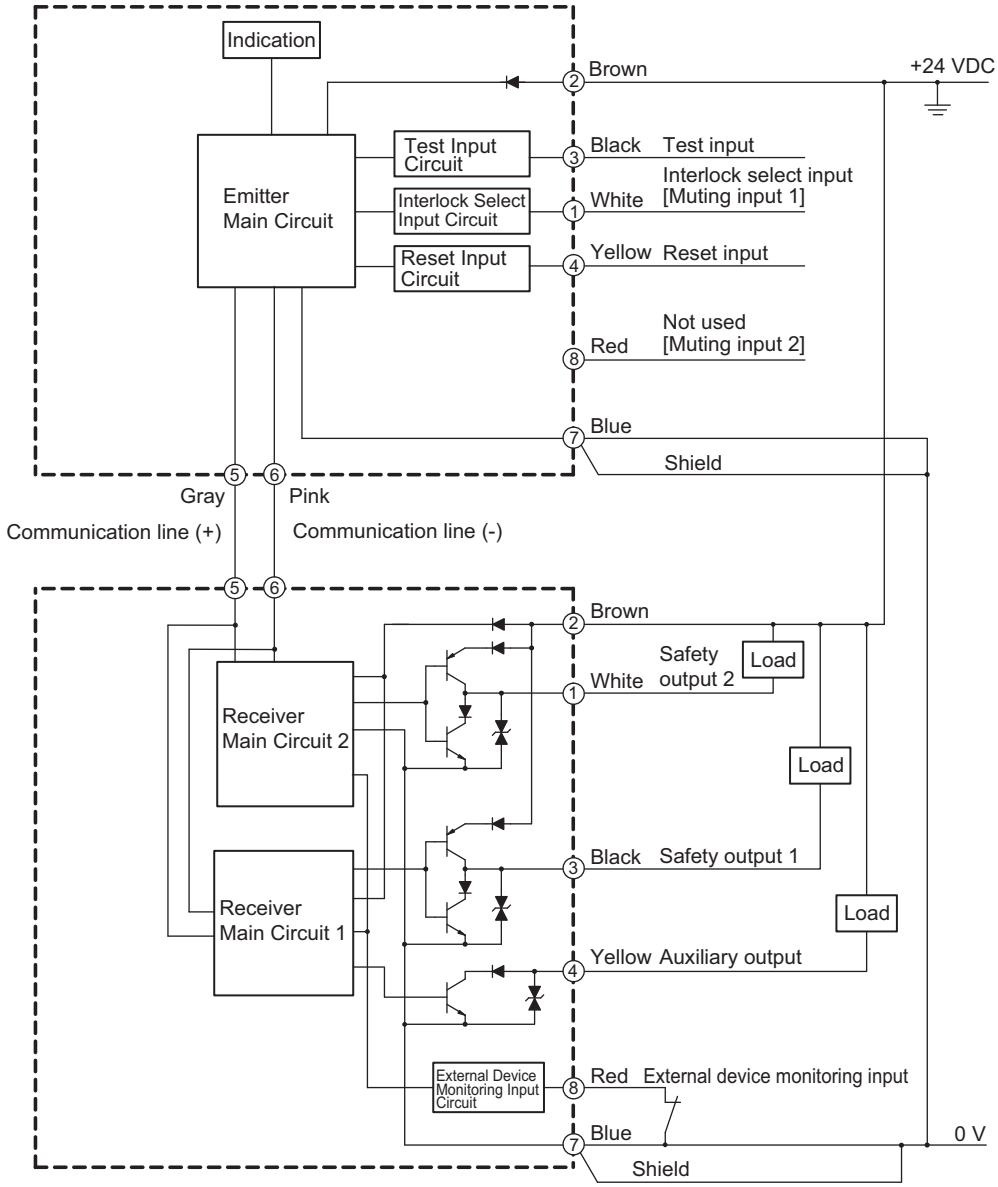

■ Input circuit diagram by function

The input circuit diagrams of the Basic Type by function are shown below.

<Input circuit (Test, Reset or Interlock Select input, Muting input)>

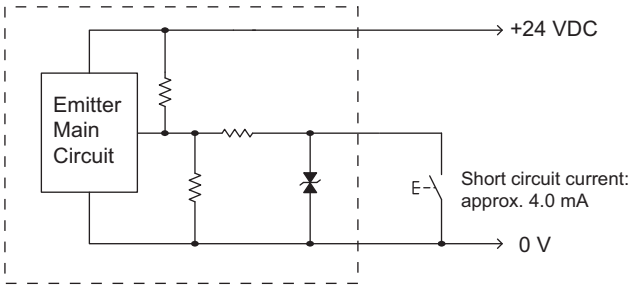

<Input circuit (external device monitoring input)>

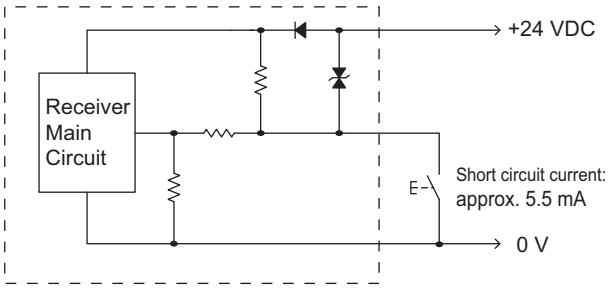

Wiring Examples

Examples of a motor control system using the F3SJ-E/B are shown below. This chapter shows examples equivalent to ISO 13849-1 (Category 4, PLe).

Using F3SJ-E Only

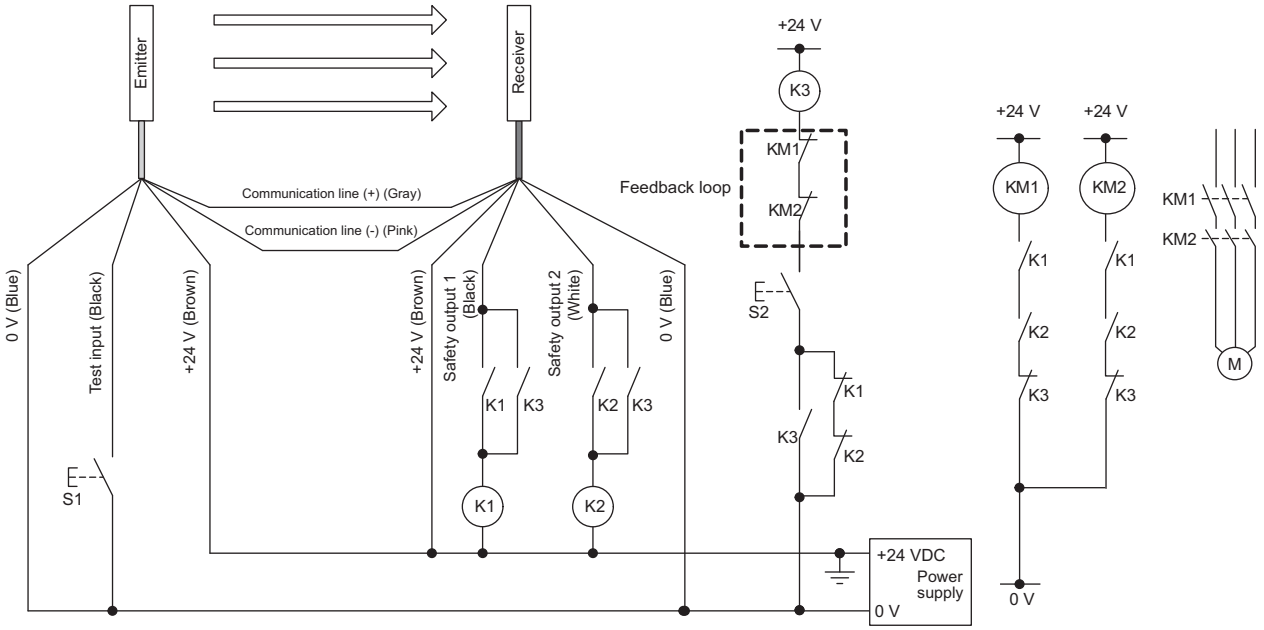

S1 : External test/lockout reset switch (connect to 24 V if a switch is not required)
S2 : Reset switch
K1, K2, K3 : Safety relay with force-guided contact (G7SA)
KM1, KM2 : Safety relay with force-guided contact (G7SA) or magnetic contactor
M : Motor

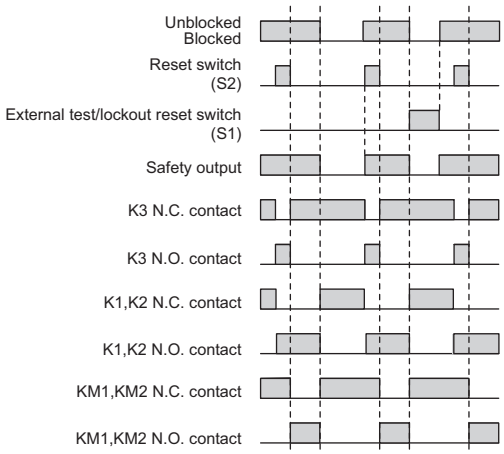

CHECK!

Enable reset switch S2 for long enough with the consideration of the operating time or recovery time of each relay that you use.

Using F3SJ-B Only

Basic system

- Manual reset mode
- Using external device monitoring function

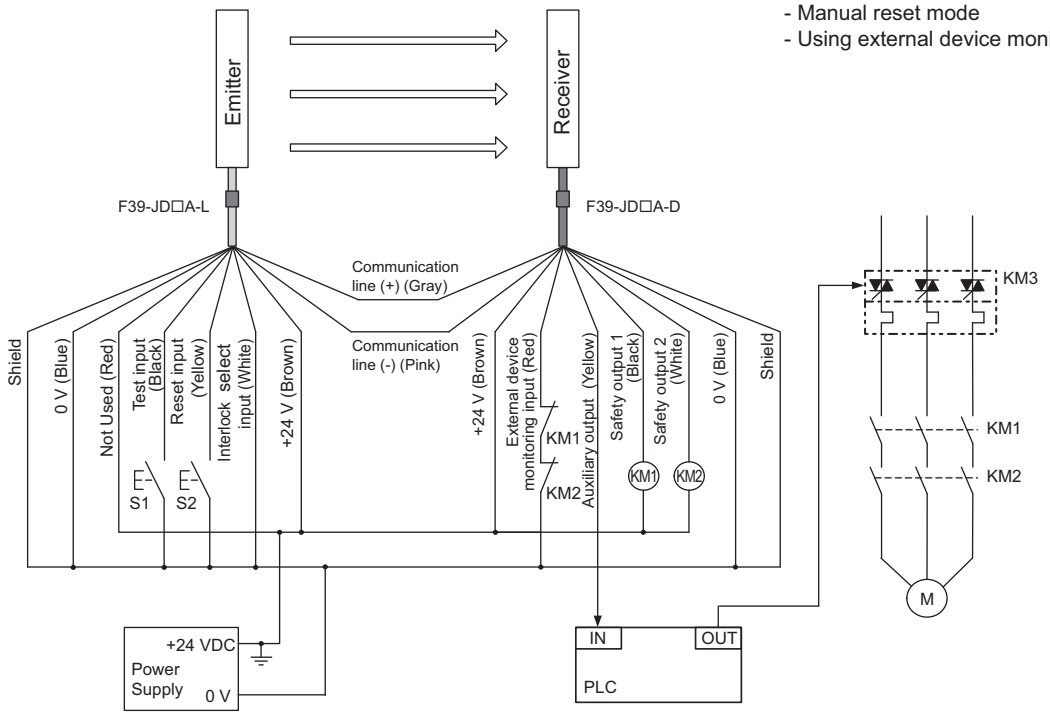

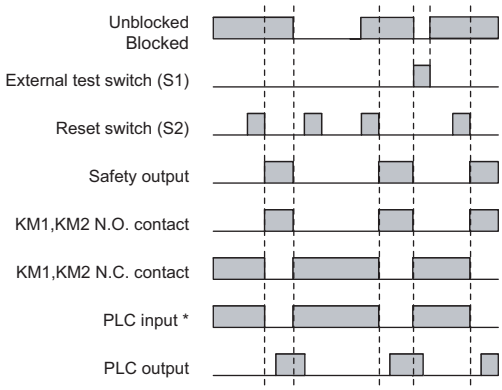

S1 :External test switch (connect to 24 V if a switch is not required)
S2 :Interlock/lockout reset switch
KM1, KM2 :Safety relay with force-guided contact (G7SA) or magnetic contactor
KM3 :Solid state contactor (G3J)
M :Motor
PLC :Programmable controller (Used for monitoring -- not related to safety system)

* Auxiliary output gives inverted signal of safety output.

■ Muting system

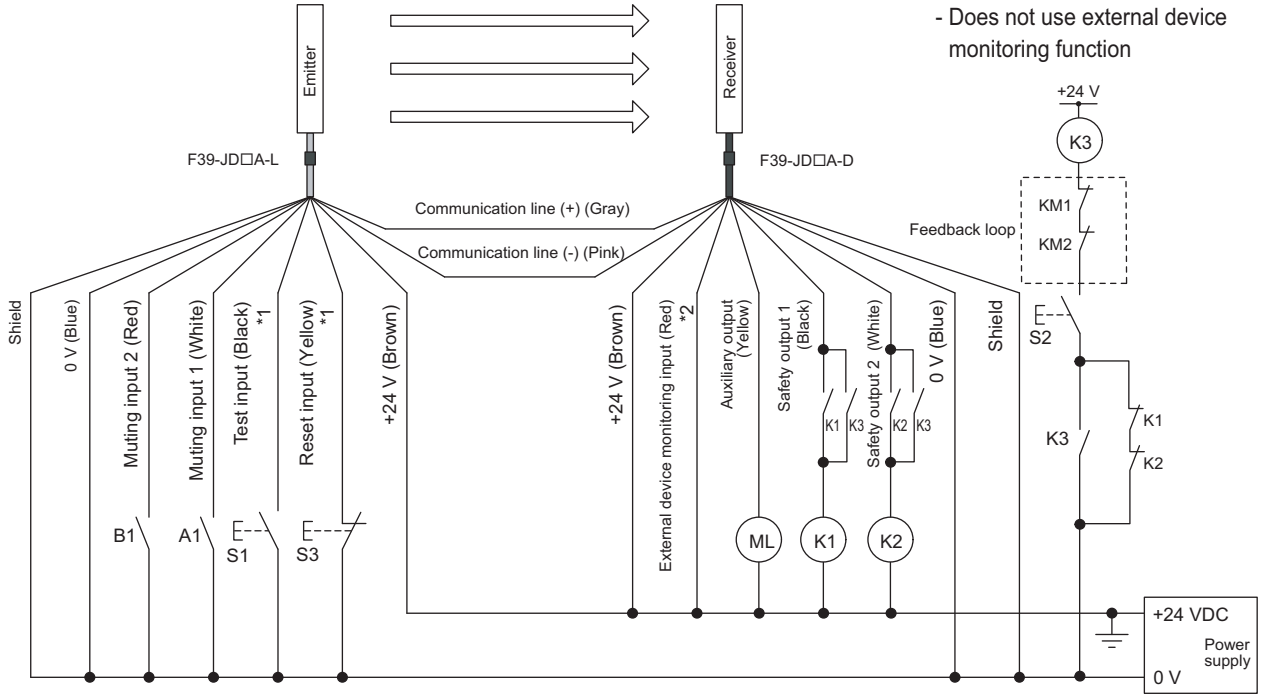

S1 : External test switch (connect to 24 V if a switch is not required)
S2 : Reset switch
S3 : Lockout reset switch (connect to 0 V if a switch is not required)
A1 : Contact by muting sensor A1
B1 : Contact by muting sensor B1
K1,K2,K3 : Safety relay with force-guided contact (G7SA)
KM1,KM2 : Safety relay with force-guided contact (G7SA) or magnetic contactor
ML : External indicator
M : Motor

*1. Also used for override input.
*2. Under muting system, connect to 24 V as the external device monitoring cannot be used.

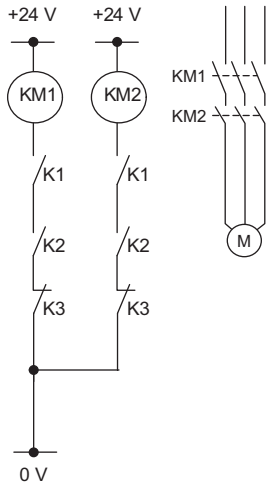

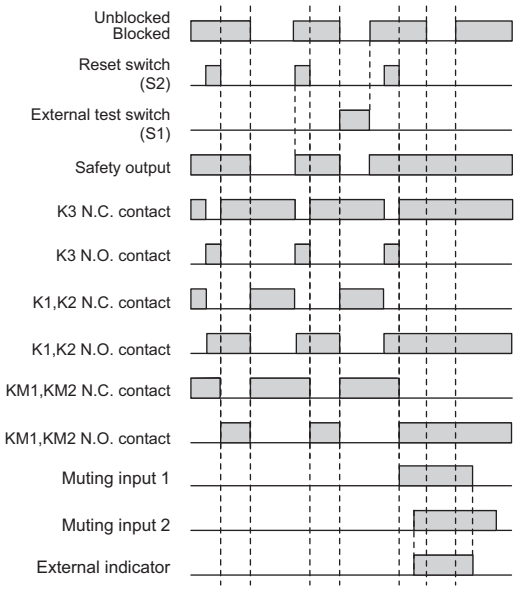

CHECK!

Enable reset switch S2 for long enough with the consideration of the operating time or recovery time of each relay that you use.

Connecting a F3SJ-E to Various Controllers

■ Connecting a F3SJ-E to a G9SA-301-P Controller

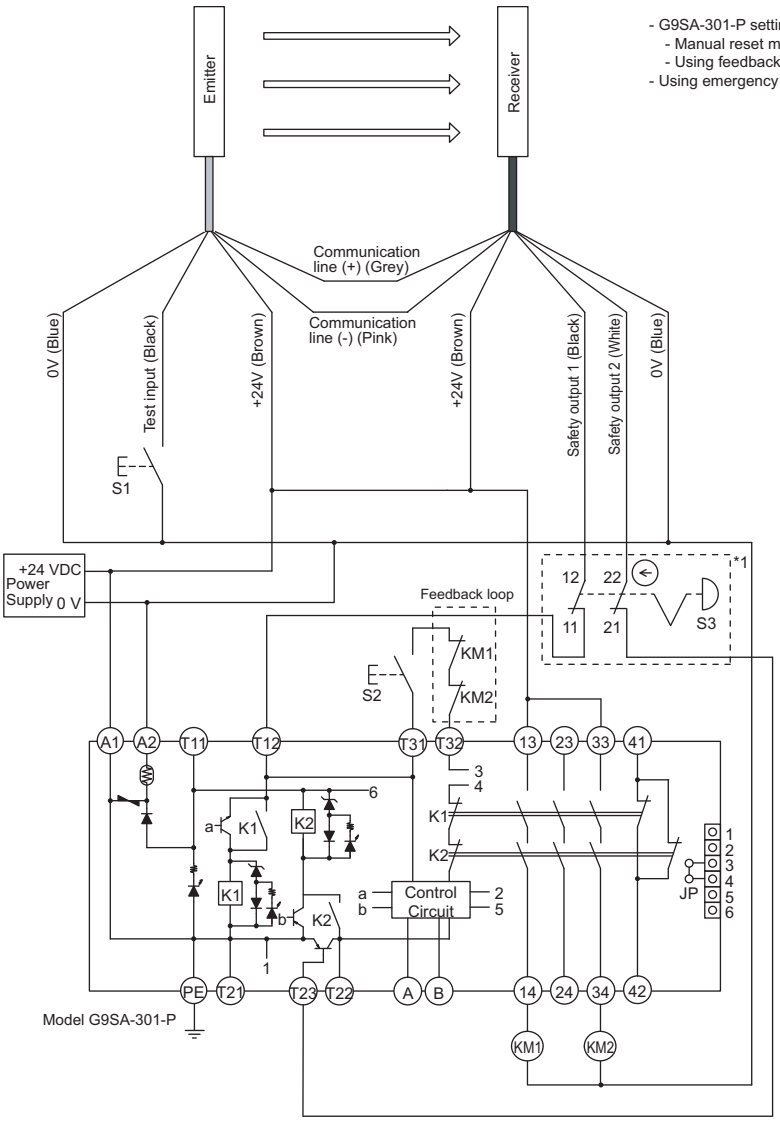

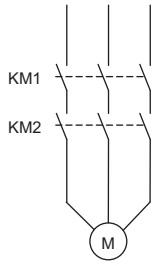

*1 If an emergency stop switch is not used, connect safety output 1 to T12 terminal and safety output 2 to T23 directly.

S1 : External test/ lockout reset switch (connect to 24 V if a switch is not required)
S2 : Interlock reset switch
S3 : Emergency stop switch (force-opening contact) (A165E, A22E)
KM1, KM2 : Safety relay with force-guided contact (G7SA) or magnetic contactor
M : Motor

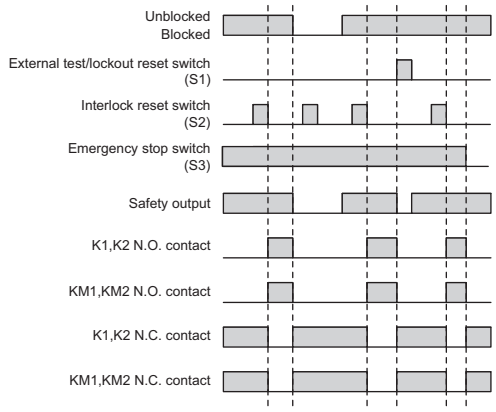

Connecting a F3SJ-B to Two Muting Sensors

- F3SJ-B settings
  - Muting system
  - Does not use external device monitoring function
- G9SA-301-P settings
  - Manual reset mode
  - Using feedback loop
- Using emergency stop switch

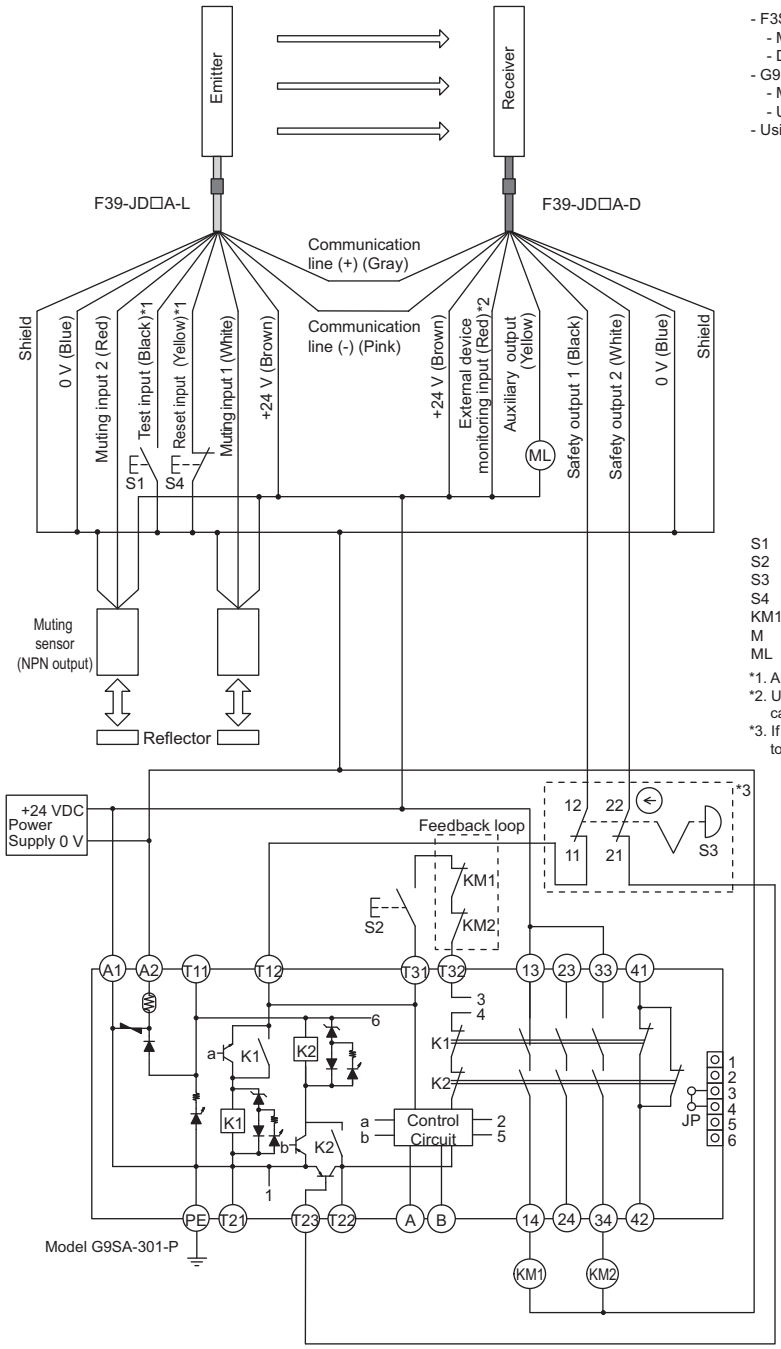

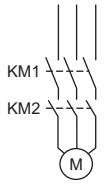

S1	: External test switch (connect to 24 V if a switch is not required)
S2	: Interlock reset switch
S3	: Emergency stop switch (force-opening contact) (A165E, A22E)
S4	: Lockout reset switch (connect to 0 V if a switch is not required)
KM1, KM2	: Safety relay with force-guided contact (G7SA) or magnetic contactor
M	: Motor
ML	: External indicator

*1. Also used for override input.
*2. Under muting system, connect to 24 V as the external device monitoring cannot be used.
*3. If an emergency stop switch is not used, connect safety output 1 to T12 terminal and safety output 2 to T23 directly.

Wiring for auto reset mode

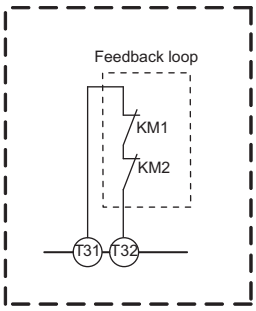

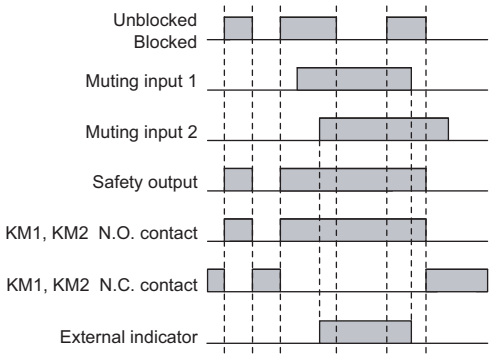

Connecting a F3SJ-B to Four Muting Sensors

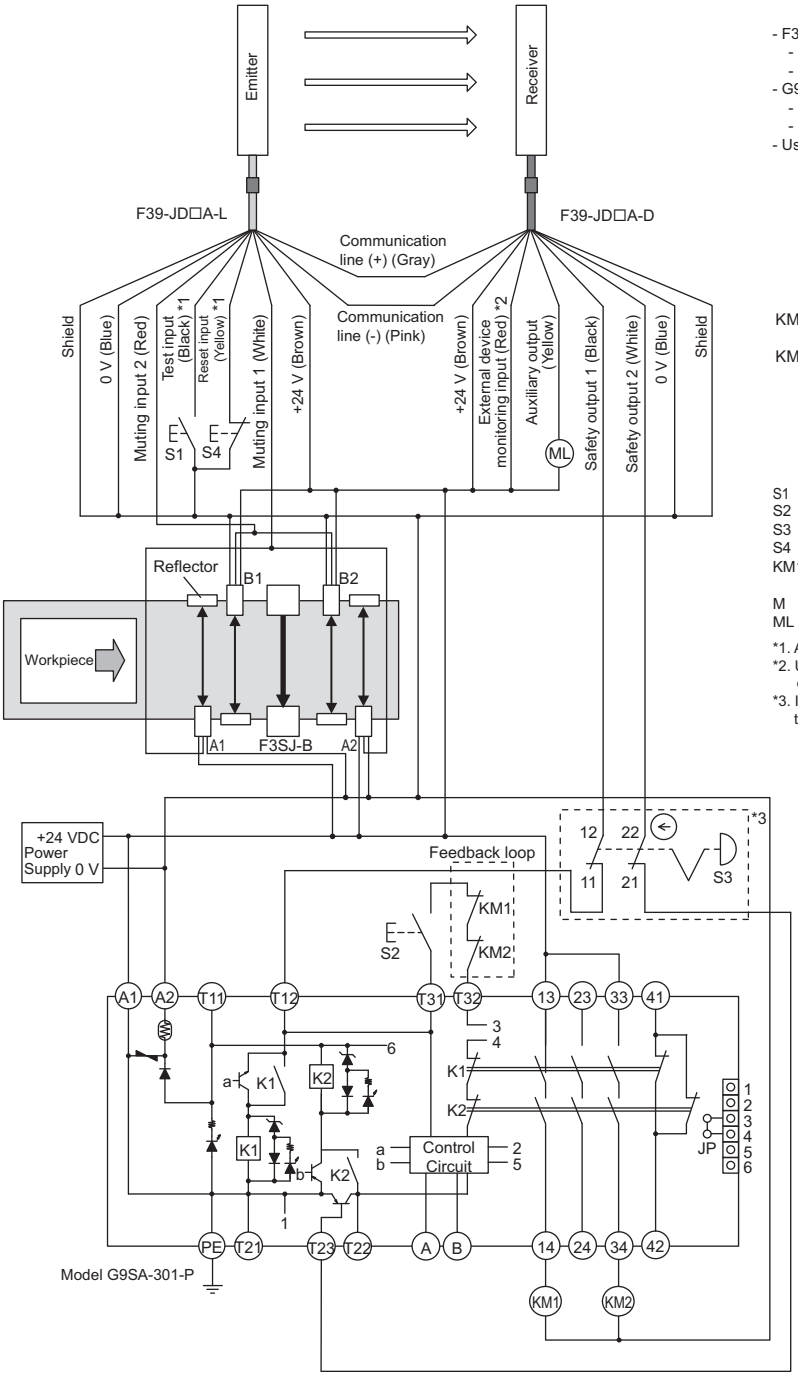

- F3SJ-B settings
  - Muting system
  - Does not use external device monitoring function
- G9SA-301-P settings
  - Manual reset mode
  - Using feedback loop
- Using emergency stop switch

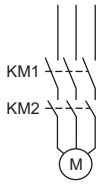

S1	: External test switch (connect 24 V if a switch is not required)
S2	: Interlock reset switch
S3	: Emergency stop switch (force-opening contact) (A165E, A22E)
S4	: Lockout reset switch (connect to 0 V if a switch is not required)
KM1, KM2	: Safety relay with force-guided contact (G7SA) or magnetic contactor
M	: Motor
ML	: External indicator

*1. Also used for override input.
*2. Under muting system, connect to 24 V as the external device monitoring cannot be used.
*3. If an emergency stop switch is not used, connect safety output 1 to T12 terminal and safety output 2 to T23 directly.

Wiring for auto reset mode

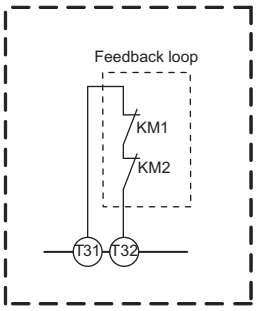

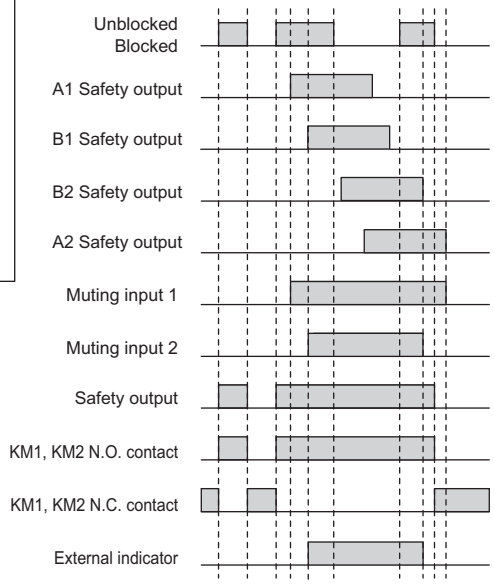

Connecting a F3SJ-B to Various Controllers

■ Connecting a F3SJ-B to a G9SA-301-P

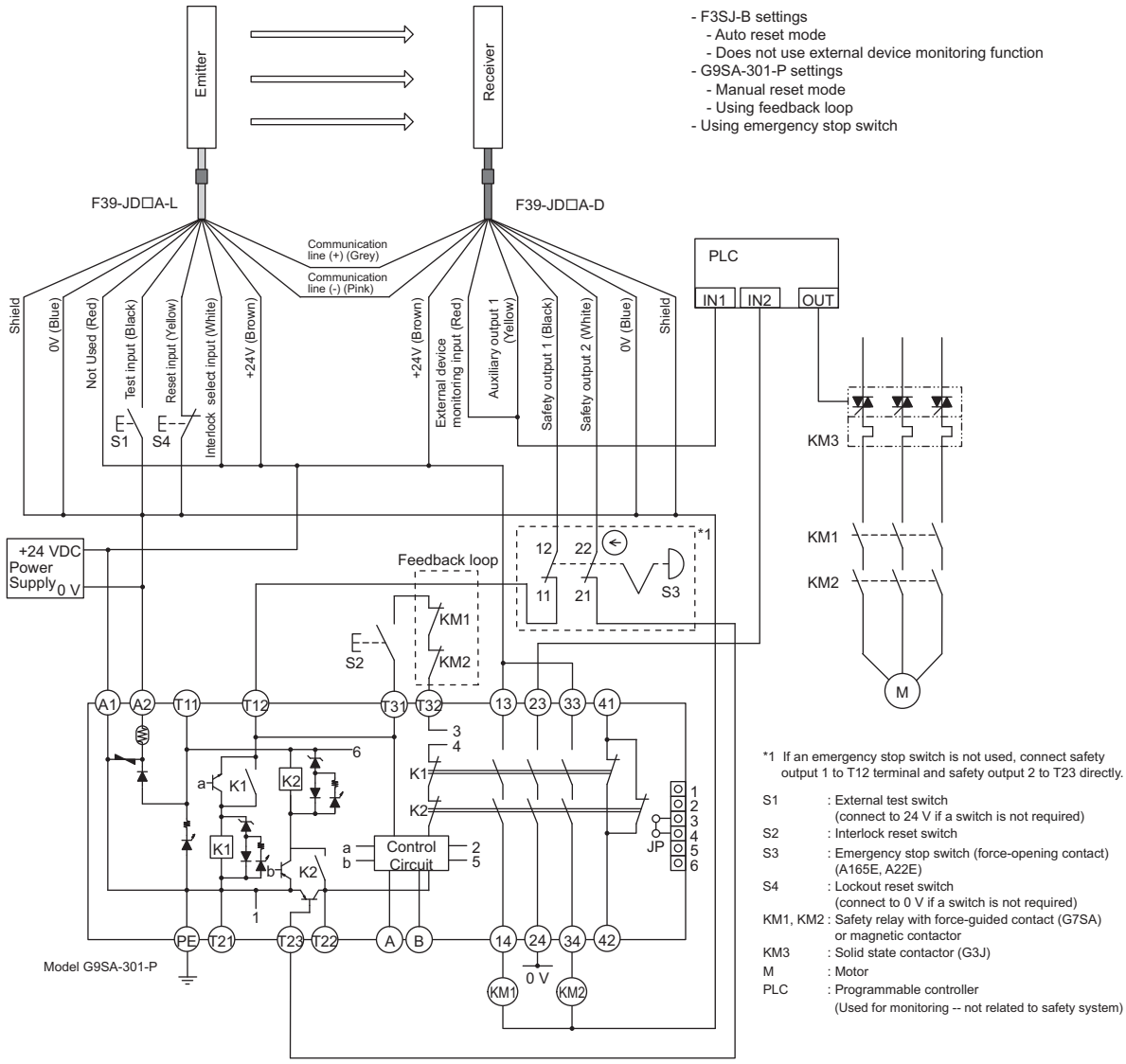

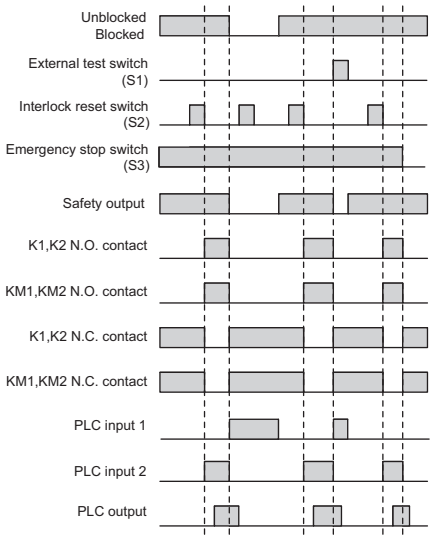

Using a simple wiring connector for F3SJ-B

•A combination of a cable for simple wiring (F39-JD□BA) and a simple wiring connector (F39-CN5) can be used for a simple wiring system.

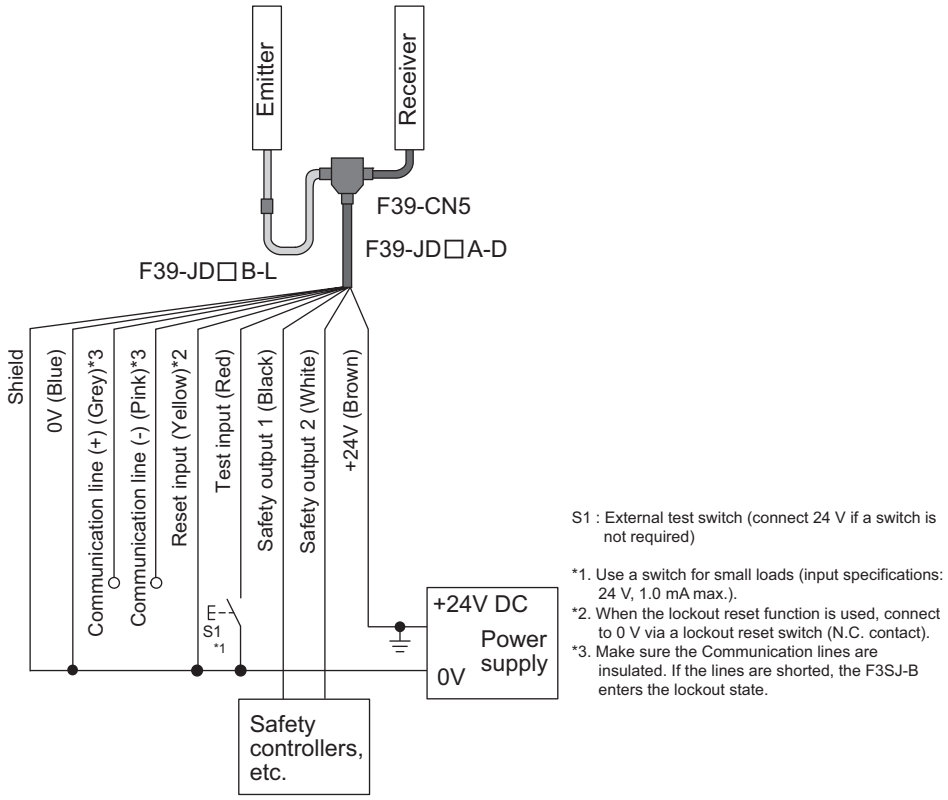

Note1:When using the Simple Wiring Connector (F39-CN5), the following functions are not available.

- Manual Reset
- External Device Monitoring
- Auxiliary Output
- Muting/Override

Note2:F39-JDÅ†B-L is connected to the emitter by the above picture, but even if F39-JDÅ†B-L is connected to the receiver, F3SJ operates.

Chapter5 Checklists

Pre-Operation Checklists 106

Checklists 106

Maintenance Checklists 108

Checklists 108

Pre-Operation Checklists

⚠ WARNING

Make sure to test the operation of the F3SJ-E/B after installation to verify that the F3SJ-E/B operates as intended. Make sure to stop the machine until the test is complete. Unintended function settings may cause a person to go undetected, resulting in serious injury.

After installation, the highest level administrator must use the following checklist to verify the operation, placing a check mark in each of the boxes.

Checklists

■ Installation condition check

- ☐ The machine itself does not prevent the operation of safety functions such as stopping.
- ☐ The hazardous part of a machine cannot be reached without passing through the detection zone of the F3SJ-E/B.
- ☐ The system is configured so that the F3SJ-E/B can always detect a worker who is working in the hazardous zone.
- ☐ The interlock reset switch is installed in a location that provides a clear view of the entire hazardous zone and it cannot be activated from within the hazardous zone.
- ☐ Safety distance has been calculated. Calculated distance: S = ( ) mm
- ☐ The actual distance is equal to or greater than the calculated distance. Actual distance = ( ) mm
- ☐ Reflective surfaces are not installed in prohibited zones.
- ☐ Not installed in a reflective configuration.
- ☐ When muting function is used, a muting sensor must be installed so that muting state should not occur when a human body enters a detection zone of F3SJ-E/B by mistake.
- ☐ When muting function is used, a muting sensor must be installed so that muting state should not occur when a human body enters a hazardous zone of a machine.
- ☐ When muting function is used, muting state can be checked from where a worker operates or adjust the machine.
- ☐ A muting sensor consists of two independent devices.
- ☐ Not used in flammable or explosive atmosphere.

■ Wiring check before power is turned ON

- ☐Sharing the power supply with other devices may cause the F3SJ-E/B to be affected by noise or voltage drop. It is recommended that this safety component use a dedicated power supply but do not share with other devices.
- ☐The power supply unit provides 24 VDC while complying with the EMC Directive, Low Voltage Directive, output holding specification.
- ☐The power supply polarity is not connected in reverse.
- ☐Emitter/receiver cables are properly connected to the respective emitters/receivers.
- ☐Double insulation is provided between input/output and hazardous voltage (commercial power source, etc.).
- ☐Outputs are not short-circuited to 0 V line.
- ☐Loads are not connected to the 0 V line.
- ☐All lines are not connected to commercial power source.
- ☐Model of emitter and receiver must be the same.
- ☐When two or more sets of F3SJ-E/Bs are used, they are series-connected or mutual interference prevention measures are taken.
- ☐When two or more sets of F3SJ-Bs are used in series connection, a PNP type must not be connected to an NPN type, and vice versa.
- ☐A secondary sensor farthest from its power supply has either of the following:
  - •Cap
  - •Key cap for muting
- ☐Neither connector nor bracket must be loose.
- ☐Auxiliary output must not be used as safety output.

☐Power supply's +24 V must be grounded.
☐Wiring must not be bent, cracked, nor damaged.

■ Operation check while the machine is stopped

☐The test rod is not deformed.
Use a test rod with an appropriate diameter for inspection.
☐The sensor can detect a test rod wherever it is in the detection zone. In other words, when a test rod is inserted into the detection zone, the stable-state indicators (STB) turn off and the ON/OFF output-state indicators turn red.

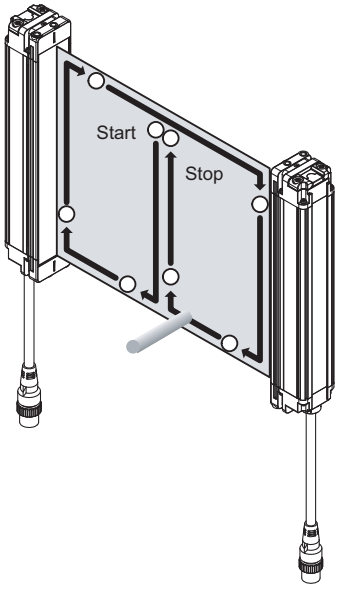

☐When the external test function is used:
ON/OFF-state indicators turn red when the test input line is short-circuited to 0 V to 3 V.
☐When the external device monitoring function is used:
When the F3SJ-B is blocked and the external device monitoring input terminal is open, it enters a lockout state.
☐When the manual reset function is used:
After the F3SJ-B is turned ON, the ON/OFF-state indicators must remain red, even if the F3SJ-B is not blocked. The reset input must turn the ON/OFF-state indicators to green.
After that, when the F3SJ-B is blocked and returned to unblocked state when the ON/OFF-state indicators are green, the ON/OFF-state indicators remain red. The reset input must turn the ON/OFF-state indicators to green.
☐When using muting lamp:
Under muting state, a signal that indicates muting state is output to the auxiliary output.
Under override state, a signal that indicates override state is output to the auxiliary output.

■ Checking that hazardous parts stop while the machine operates

☐The hazardous parts stop immediately when a test rod is inserted into the detection zone at three positions: "directly in front of the emitter", "directly in front of the receiver", and "between the emitter and receiver". (Use the appropriate test rod.)
☐The hazardous parts remain stopped as long as the test rod is in the detection zone.
☐The hazardous parts stop when the power of the F3SJ-E/B is turned OFF.
☐The actual response time of the whole machine is equal to or less than the calculated value.

Maintenance Checklists

⚠ WARNING

Perform daily and 6-month inspections for the F3SJ-E/B. Otherwise, the system may fail to work properly, resulting in serious injury.

Do not try to disassemble, repair, or modify this product. Doing so may cause the safety functions to stop working properly.

To ensure safety, keep a record of the inspection results.
When the user is a different person from those who installed or designed the system, he/she must be properly trained for maintenance.

Checklists

■ Inspection at startup and when changing operators

☐There is no approach route other than through the detection zone of the F3SJ-E/B.
☐Part of the operator's body always remains in the detection zone of the F3SJ-E/B when working around the machine's hazardous part.
☐The actual safety distance is equal to or greater than the calculated value.
☐There must be no dirt on or damage to the optical surface and spatter protection cover (F39-HB☐☐☐, sold separately) of the F3SJ-E/B.
☐ON/OFF-state indicators turn red when the test input line is short-circuited to 0 V to 3 V.
☐When muting lamp is used, a muting lamp must be clear and free of dirt or degradation.
☐The test rod is not deformed.
☐When the manual reset function is used:
After the F3SJ-B is turned ON, the ON/OFF-state indicators must remain red, even if the F3SJ-B is not blocked. The reset input must turn the ON/OFF-state indicators to green.
After that, when the ON/OFF-state indicators are green, block the F3SJ-B and return it to unblocked state. The ON/OFF-state indicators remain red. The reset input must turn the ON/OFF-state indicators to green.
☐When the power of the F3SJ-E/B is turned ON while nothing is in the detection zone, it must operate as follows:
When auto reset is used: The power indicator and ON/OFF-state indicators turn green within 2 seconds after the F3SJ-B is turned ON.
When manual reset is used: The power indicator turns green and the ON/OFF-state indicators turn red within 2 seconds after the F3SJ-B is turned ON.
☐When the power of the F3SJ-E is turned ON while nothing is in the detection zone, it must operate as follows:
The power indicator and the ON/OFF-state indicator turn to green within 2 seconds after the power is turned ON.
☐Nothing should exist in the detection zone and stable-state indicators must turn ON at power on.

☐The test rod is detected when it is moved around in the detection zone as shown in the diagram below. In other words, when a test rod is inserted into the detection zone, the stable-state indicators (STB) turn off and the ON/OFF-state indicators turn red.

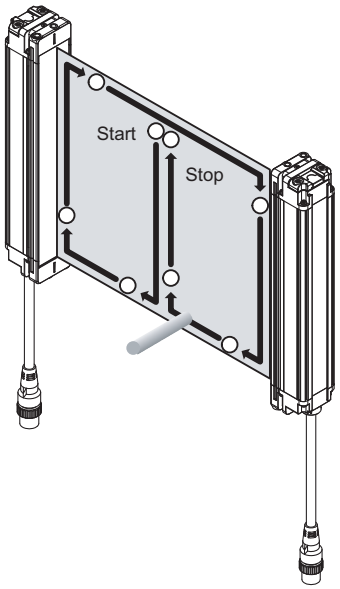

☐When muting function is used, installation condition of muting sensor must not be changed.
☐When muting function is used, muting state can be checked from where a worker operates or adjust the machine.
☐Neither connector nor bracket must be loose.

■ Checking that hazardous parts stop while the machine operates

☐The hazardous parts are movable when nothing is in the detection zone.
☐The hazardous parts stop immediately when a test rod is inserted into the detection zone at three positions: "directly in front of the emitter", "directly in front of the receiver", and "between the emitter and receiver". (Use the appropriate test rod.)
☐The hazardous parts remain stopped as long as the test rod is in the detection zone.
☐The hazardous parts stop when the power of the F3SJ-E/B is turned OFF while nothing is in the detection zone.

■ Items to inspect every six months or when machine settings are changed

In addition to inspection item at operation start, following items must also be verified.

☐The outputs of the F3SJ-E/B and the machine are properly wired.
☐The total number of times that the control relays/contactors have switched is significantly lower than their design lives.
☐There is no disturbance light.
☐When F3SJ-B is connected again, a secondary sensor farthest from its power supply has either of the followings:
- Cap
- Key cap for muting

☐Power supply's +24 V must be grounded.
☐Wiring must not be bent, cracked, nor damaged.

Chapter6 Appendix

Troubleshooting 112

Lockout State 112
Warning View 112
Troubleshooting Methods 114
Muting Error Indication 117

Optional Accessories (Sold Separately) 118

Glossary 123

Related Standards 125

International Standards 125
European Standards 125
US Occupational Safety and Health Standards 125
US Standards 125
Canadian Standards 126
SEMI Standards 126
JIS Standards 126

Troubleshooting

Lockout State

If any error is detected that prevents F3SJ-E/B to continue normal operation, it keeps safety output OFF and transitions to lockout state. Under lockout state, the lockout indicators blink or are ON and other indicators blink based on the failure. Perform actions based on the Troubleshooting described later.
Eliminate the cause of the problem. Then turn the power ON again or reset the lockout state by providing a test input for Easy type or a reset input for Basic type to restart the F3SJ-E/B.

Warning View

If an abnormality is detected that prevents F3SJ-E/B to continue normal operation, STB or MUTING ERROR indicator is blinked to notify warning information based on the details of the abnormality. F3SJ-E/B continues normal operation. Perform actions based on the Troubleshooting described later.

CHECK!

Under the manual reset mode, F3SJ-E/B keeps control output OFF. Input the reset signal to release the Interlock state.

• Easy Type

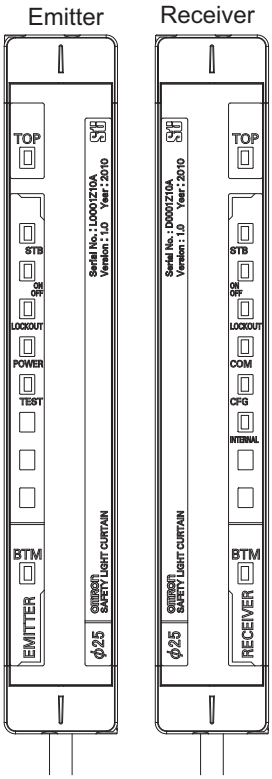

• Basic Type

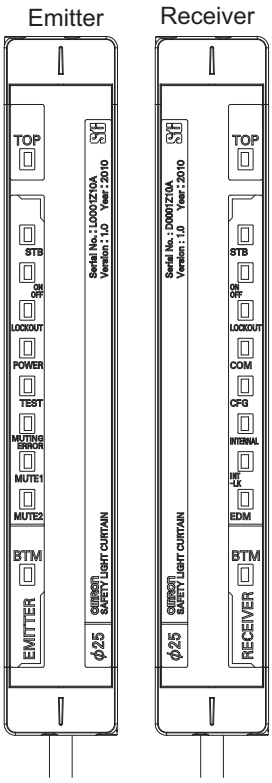

Troubleshooting Methods

Identify an error according to the combination of the indicators when the error occurs. See the following troubleshooting tables to take measures.

<Indicator status at lockout>

Combination of Indicators and Error Description

			[Error Description]
LOCKOUT	POWER	TOP	Cap error
		STB	Ambient light error
		ON OFF	Safety output error
		INT -LK	Input wiring error
		EDM	External device monitoring error
		COM	Communication error
		INTERNAL	Internal error
		CFG	Configuration error of emitter-receiver combination
	POWER	ON OFF	Safety output error due to power supply voltage or noise
		COM	Communication error due to power supply voltage or noise
		INTERNAL	Internal error due to power supply voltage or noise

<Indicator status at warning>

The combination of indicators when an error occurs and description of warnings

			[Warning description]
LOCKOUT	POWER	STB	Malfunction due to ambient light or vibration
		MUTING ERROR	Muting error

Description	Cause and measures
Cap error	A cap may be detached. Attach the cap properly.
Communication error	The communication line or other wiring may be broken or short-circuited. Check the wiring and cables.
	A power cable may be detached. Check connectors of the power cable.
	If the wiring is extended with cables other than specified, the cables used for extension may not have performance equivalent or greater than the specified cables. Use cables with the same performance or more than the specified cables. See "Wiring" in Chapter 3.
Safety output error	Safety output lines may be short-circuited to each other or another signal line may be short-circuited to the safety output line. Wire the safety output lines properly. See "Wiring Diagrams" in Chapter 2 or "Wiring" in Chapter 3.
Input wiring error	Combinations of interlock select input line and reset input line may be wrong. The reset input line may not have been properly wired when a muting key cap was mounted. Perform correct wiring. See "Wiring Diagrams" in Chapter 2 or "Wiring" in Chapter 3.
External device monitoring error	Emitter(s) and receiver(s) may be reversely connected to connectors on a controller. Check the connecting positions with the connectors.
	If the external device monitoring input line is short-circuited to the auxiliary output line instead of a relay, the auxiliary output line may be broken or short-circuited to another line.
	Relay may be welded. Replace the relay.
	The relay and external device monitoring input line may not be properly wired. Check the wiring with the relay. See "Wiring Diagrams" in Chapter 2 or "Wiring" in Chapter 3.
	The relay response time may be exceeding the allowable delay time (0.3 s). Replace the relay with one that has an appropriate response time. See "Wiring Diagrams" in Chapter 2 or "Wiring" in Chapter 3.
Internal error	An error may have occurred in the internal circuit. Replace the F3SJ-E/B.
Configuration error of emitter-receiver combination	A model name does not match between emitter and receiver. Check that the emitter and receiver are the same model. Series connection cables may have been short-circuited, broken or disconnected. Check if series connection cables are connected properly. Replace a series connection cable if it is broken.
Ambient light error	The receiver may be receiving light emitted from another photoelectric switch or F3SJ-E/B. See "Mutual Interference Prevention" in Chapter 3. p.45

Description	Cause and measures
Safety output error due to power supply voltage or noise	The power supply voltage may have dropped temporarily when the F3SJ-E/B is in operation. Check for temporary power supply voltage drop (by about 12 VDC) by the influence of the inductive load, etc. If the exclusive power supply is not used, check the power consumption of other connected devices for enough capacity.
	Effect of noise may be excessive. If other devices using the same power supply generate noise, do not share the same power supply with other devices, and use a separate power supply exclusively for the safety components. The inductive noise tends to be induced especially if the power supply line of the machine guarded and the power supply line of the F3SJ-E/B are arranged in parallel. Arrange the exclusive power supply near the F3SJ-E/B or lay the power supply line of the F3SJ-E/B away from the power supply line of the machine guarded. If the power supply for the F3SJ-E/B is located near the power supply of the machine guarded and it uses the same ground, it is subject to the influence of common mode noise from the ground. Separate the grounding point or use it as the exclusive ground.
	Power supply voltage may be outside the rated range. Connect the F3SJ-E/B to a 24 VDC±20% power supply voltage.
	Voltage fluctuation may have occurred due to insufficient power supply capacity. Replace the power supply with one that has a larger capacity.
	Instantaneous break or instantaneous stop may have occurred due to power sharing with other devices. Do not share the power supply with other devices. Connect the F3SJ-E/B to a power supply that is dedicated to electro-sensitive protective devices for electro-sensitive protective equipment such as the F3SJ-E/B, safety controller, etc.
Communication error due to power supply voltage or noise	Communication error may have occurred due to noise. Check the noise level in the environment around the communication line.
	The power supply voltage may have dropped temporarily when the F3SJ-E/B is in operation. Check for temporary power supply voltage drop (by about 12 VDC) by the influence of the inductive load, etc. If the exclusive power supply is not used, check the power consumption of other connected devices for enough capacity.
Internal error due to power supply voltage or noise	The internal circuitry may be defective due to power supply voltage or noise. Check the ambient noise environment. Make sure that the power supply voltage is 24VDC±20%. If the indicator still shows this error, replace the F3SJ-E/B.
Malfunction due to ambient light or vibration	An instantaneous beam shift may have occurred due to vibration or ambient light. Check the installation condition. Take necessary measures against mutual interference according to "Mutual Interference Prevention" in Chapter 3. p.45
Muting error	Muting input may have been applied in the incorrect order. The cause of a muting error can be determined according to the indicator display patterns. For details on indicator display patterns, see p.117.

Muting Error Indication

The cause of muting errors can be identified by display patterns of the internal indicator.

Internal indicator Muting error indicator	Cause and measures
Blinking: Once	Power supply may have been turned ON with muting input 1 or 2 being ON. Check the condition of the muting sensors and light curtains.
	Muting input 2 may have been turned ON before muting input 1 was turned ON. Check the condition of the muting sensors.
	Muting input 1 and 2 may have been turned ON at the same time. • Check the arrangement of the muting sensors. • Check if the wiring of muting input 1 and 2 is short-circuited.
	Ether muting input 1 or 2 may have been turned ON with the light curtain being blocked. Check the condition of the light curtains.
Blinking: Twice	Muting input 2 may have been turned ON within T1min (= 0.1 sec) after muting input 1 was turned ON. • Check that if the muting sensors are installed too close each other. • Check that if the speed of the workpiece is too fast.
	It may have taken T1max (= 3 sec) or longer for muting input 2 to be turned ON after muting input 1 was turned ON. • Check that if the muting sensors are installed too far each other. • Check that if the speed of the workpiece is too slow.
	The light curtain may have been blocked after muting input 1 was turned ON but before muting input 2 was turned ON. Check the condition of the light curtains.
Blinking: Three times	The light curtain may have been blocked within 0.15 sec after muting input 1 and 2 were normally turned ON. • Check that if the muting sensor and light curtain are installed too close each other. • Check that if the speed of the workpiece is too fast.
Blinking: Four times	Muting may have been released after the light curtain entered the muting state but before a workpiece blocked the light curtain. • Check that the workpiece still remains. • Check that the speed of the workpiece is too slow.
Blinking: Five times	The light curtain entered the muting state, but muting may have then been released while a workpiece passes through the light curtain. • Check that the workpiece still remains. • Check that if the speed of the workpiece is too slow. • Check that the muting sensors have been installed upstream and downstream of the light curtain with the size of workpieces taken into account. (Using four muting sensors)
Blinking: Six times	Muting may have been released with muting input 1 and 2 remained ON after a workpiece passed through the light curtain. • Check that the workpiece still remains. • Check that the speed of the workpiece is too slow.
Blinking: Seven times	The next muting sequence may have started after muting was released but before the initial muting condition was established. • Check that if a next workpiece has not entered before the current workpiece passes through the light curtain. • Check that if the interval between workpieces are too narrow.

Optional Accessories (Sold Separately)

Single-ended Connector Cable (Two cables per set, for emitter and receiver)

Appearance	Model	Cable length	Specifications
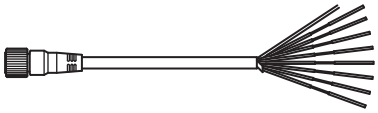	F39-JD3A	3 m	M12 connector (8-pin) - 8 wires + Shield
	F39-JD7A	7 m	
	F39-JD10A	10 m	
	F39-JD15A	15 m	
	F39-JD20A	20 m	

Note 1. The Single-ended Connection Cable can also be ordered just for the emitter or receiver. The suffix "-L" for emitter or "-D" for receiver at the end of the model name must be added when placing an order.
Single-ended Connector Cable for emitter: F39-JD□A-L,
Single-ended Connector Cable for receiver: F39-JD□A-D

Note 2. To extend the cable length to 20 m or more, add the Double-ended Connector Cable (F39-JD□B).
Example: When using a cable of 30 m, connect the F39-JD10A Single-ended Connector Cable with the F39-JD20B Double-ended Connector Cable.

Double-ended Connector Cable :For connection with F3SP-B1P or cable extension (two cables per set, for emitter and receiver)

Appearance	Model	Cable length	Specifications
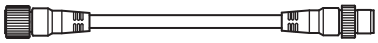	F39-JDR5B	0.5 m	M12 connector (8-pin) - M12 connector (8-pin)
	F39-JD1B	1 m	
	F39-JD3B	3 m	
	F39-JD5B	5 m	
	F39-JD7B	7 m	
	F39-JD10B	10 m	
	F39-JD15B	15 m	
	F39-JD20B	20 m	

Note 1. The Single-ended Connection Cable can also be ordered just for the emitter or receiver. The suffix "-L" for emitter or "-D" for receiver at the end of the model name must be added when placing an order.
Double-ended Connector Cable for emitter: F39-JD(R)□B-L,
Double-ended Connector Cable for receiver: F39-JD(R)□B-D

Note 2. To extend the cable length to 20 m or more, add the Double-ended Connector Cable (F39-JD□B).
Example: When using a cable of 30 m, connect the F39-JD10B Single-ended Connector Cable with the F39-JD20B Double-ended Connector Cable.

Simple Wiring Connector

Appearance	Model name	Note
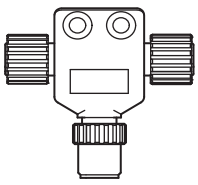	F39-CN5	This connector is used for a simple wiring system, in combination with the following cables for simple wiring system.

Cable for simple wiring (2 cables per set, for emitter and receiver)

Appearance	Model name	Cable length	Note
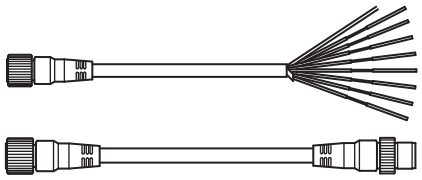	F39-JD0303BA	Emission: 3m Light Reception: 3m	Double-Ended Cable: F39-JD3B-L Single-Ended Cable: F39-JD3A-D
	F39-JD0307BA	Emission: 3m Light Reception: 7m	Double-Ended Cable: F39-JD3B-L Single-Ended Cable: F39-JD7A-D
	F39-JD0310BA	Emission: 3m Light Reception: 10m	Double-Ended Cable: F39-JD3B-L Single-Ended Cable: F39-JD10A-D
	F39-JD0503BA	Emission: 5m Light Reception: 3m	Double-Ended Cable: F39-JD5B-L Single-Ended Cable: F39-JD3A-D
	F39-JD0507BA	Emission: 5m Light Reception: 7m	Double-Ended Cable: F39-JD5B-L Single-Ended Cable: F39-JD7A-D
	F39-JD0510BA	Emission: 5m Light Reception: 10m	Double-Ended Cable: F39-JD5B-L Single-Ended Cable: F39-JD10A-D
	F39-JD1003BA	Emission: 10m Light Reception: 3m	Double-Ended Cable: F39-JD10B-L Single-Ended Cable: F39-JD3A-D
	F39-JD1007BA	Emission: 10m Light Reception: 7m	Double-Ended Cable: F39-JD10B-L Single-Ended Cable: F39-JD7A-D
	F39-JD1010BA	Emission: 10m Light Reception: 10m	Double-Ended Cable: F39-JD10B-L Single-Ended Cable: F39-JD10A-D

Note: Also available is a combination of cables for an emitter and a receiver with other lengths than the above. For details, contact Omron.
* 1. Double-ended cable for an emitter and single-end cable for a receiver.

Series connection cable for extension (two cables per set, for emitter and receiver)

Appearance	Model	Cable length	Specifications
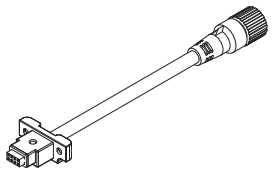	F39-JBR2W	0.2 m	Cap (8-pin) - M12 connector (8-pin)

Muting Key Cap

Appearance	Model	Remarks
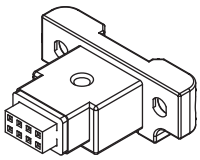	F39-CN10	Housing color: Orange For both emitter and receiver

Spatter Protection Cover (two pieces per set, for emitter and receiver)

Appearance	Model	Remarks
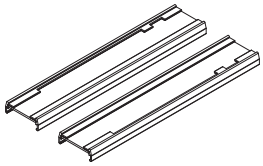	F39-HB□□□□	The suffix □□□□ in the model name indicates the same 4-digit number as the protective height (the suffix □□□□ in the model name) of the F3SJ-E/B. When a spatter protection cover is attached, operating range of F3SJ-E/B is simple by about 10%. Spatter protection cover with 1985 or higher of the □□□□ in the model is divided into two in combination to use.

Protect Bar (one piece per set, common for emitter/receiver)

Appearance	Model	Remarks
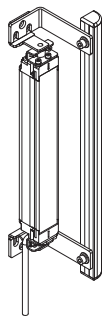	F39-PB□□□□	The suffix □□□□ in the model name indicates the same 4-digit number as the protective height (the suffix □□□□ in the model name) of the F3SJ-E/B. Only one Protect Bar is included.(Common for emitter/receiver) Purchase two sets if both emitter and receiver require the Protect Bar.

Top/Bottom Bracket

Appearance	Model	Application	Remarks
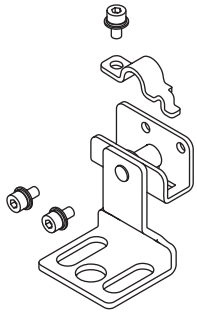	F39-LJB1	Top/Bottom Bracket for F3SJ-E/B	Four brackets per set (two brackets for emitter, two brackets for receiver) Side mounting and backside mounting possible

Intermediate Bracket

Appearance	Model	Application	Remarks
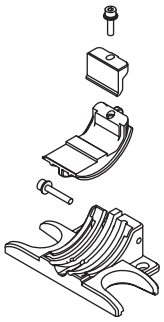	F39-LJB2	Used in combination with Top/Bottom Bracket for F3SJ-E/B. This can be used as a bracket for Free-Location mounting.	Two brackets per set Side mounting and backside mounting possible The same as the one used with One-touch Bracket.

One-touch Bracket

Appearance	Model	Application	Remarks
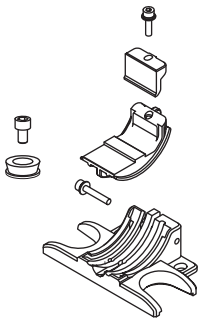	F39-LJB3-M6	One-touch M6 bracket kit for F3SJ-E/B	Two brackets per set Side mounting and backside mounting possible The set includes the following: - F39-LJB2: 2 pcs - F39-LJB3-M6K: 2 pcs
	F39-LJB3-M8	One-touch M8 bracket kit for F3SJ-E/B	Two brackets per set Side mounting and backside mounting possible. The set includes the following: - F39-LJB2: 2 pcs - F39-LJB3-M8K: 2 pcs

One-touch M6 Bracket, One-touch M8 Bracket

Appearance	Model	Application	Remarks
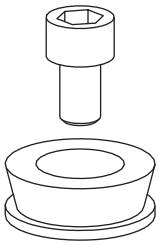	F39-LJB3-M6K	Used for mounting Intermediate Bracket with one-touch operation.	Comes with M6 hexagon socket low head cap screws (M6 x 10).
	F39-LJB3-M8K		Comes with M8 hexagon socket low head cap screws (M8 x 14).

Replacement Bracket

Appearance	Model	Application	Remarks
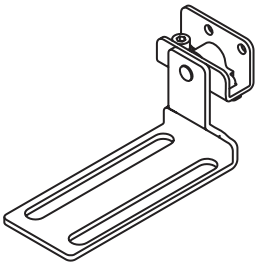	F39-LJB4	Mounting bracket that is used when replacing existing area sensors (F3SJ-A or F3SN) with a F3SJ-E/B.	Four brackets per set (two brackets for emitter, two brackets for receiver) Side mounting and backside mounting possible

Contact mount Bracket

Appearance	Model	Application	Remarks
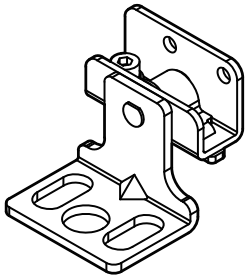	F39-LJB5	Bracket to closely contact the back side of the Sensor.	2 for an emitter, 2 for a receiver, total of 4 per set

Control Unit

Appearance	Model	Output	Remarks
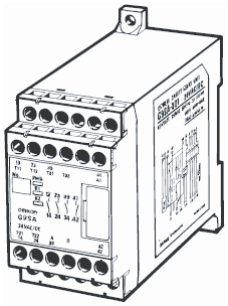	G9SA-301-P	Relay with three N.O. and one N.C. contacts	• An F39-JD□A single-ended cable is required. • An NPN type of F3SJ-E/B can be connected.

Laser Alignment Kit

Appearance	Model	Application	Specifications
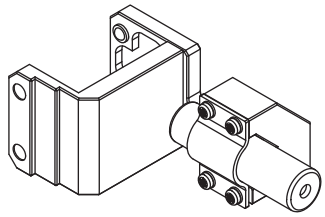	F39-PTJ	Beam alignment for F3SJ-E/B.	Red laser diode (650 nm wavelength, 1 mW max, JIS CLASS 2, IEC CLASS 2, FDA CLASS II)

Test rod

Appearance	Model name	Diameter
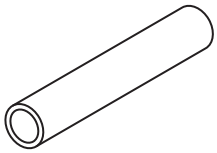	F39-TRD25	Dia. 25mm

CHECK!

To check operation before use, purchase and use the test rod.

Glossary

	Term	Description
A	Allowable delay time	The allowable amount of time from when a state of the safety output changes until a state of the external device monitoring input changes. The F3SJ-E/B enters lockout if this time is exceeded.
	Auto reset	When the power is turned ON and the F3SJ-B is blocked and then unblocked, the safety output automatically turns ON.
	Auxiliary output	Basic type (basic system) gives inverted signal of safety output, and Basic type (muting system) gives ON output at muting/override.
B	Basic system	Basic system indicates the F3SJ-B with its default factory settings. The basic system provides basic safety light curtain functions. Most functions can be used without performing additional configuration.
D	Detection capability	Minimum size of an object that can be detected in the protective height of the F3SJ-E/B.
E	Effective aperture angle (EAA)	Range of angles for which the F3SJ-E/B can operate.
	External device monitoring	Function that detects malfunctions, such as welding, in external relays (or contactors) that control the hazardous zone of a machine, by monitoring the operation of N.C. contacts.
	External test	Function that stops emission at any time to check that the safety output is being properly turned OFF.
I	Interlock	Function that holds the safety outputs to OFF until safety is ensured and a reset input is applied.
	Interlock reset	Cancels the interlock state.
K	Key cap for muting	Connector that is attached to the end cap of an emitter or receiver to use muting function.
L	Lockout	Function that holds safety output OFF when an error is detected by the F3SJ-E/B.
	Lower beams	Indicate beams on F3SJ-E/B's power supply end.
M	Manual reset	When the F3SJ-B in the interlock mode is unblocked, the safety output is turned ON by applying a reset input.
	Maximum muting input pulse duration	This is the maximum value for the waveform cracks allowed for muting input 1 and 2 when muting is in effect.
	Muting	Function that temporarily disables the safety function of the F3SJ-B, keeping the safety output ON even if beams are being blocked.
	Muting error	Occurs when muting input is not applied in the correct order. As long as the F3SJ-B is not interrupted, safety output does not turn OFF and normal operation continues.
	Muting input time limit value (maximum)	This is the maximum value of the time difference between inputs of muting input 1 and 2.
	Muting input time limit value (minimum)	This is the minimum value of the time difference between inputs of muting input 1 and 2.
	Muting sensor	Input device, such as photoelectric sensor or proximity sensor, which sends a timing signal to start or end the muting function.
	Muting system	This refers to the F3SJ-B when a key cap for muting is attached. The muting function and override function can be used under this system.
	Muting time limit	This is the muting function continuation time. The muting function is cancelled if the muting state continues for longer than this time limit under this system.
O	Output operation mode	A state of signal sent from the safety output or auxiliary output.
	Override	Function that turns the safety output ON when the muting function is not working.
	Override time limit	The continuation time of the override function. The override state is cancelled if it continues for longer than this time limit.
P	PELV	Stands for Protected Extra Low Voltage. A grounded circuit separated by double insulation or equivalent from hazardous voltage, and does not generate voltage that exceeds ELV under normal conditions and under single-fault conditions. Normally, protection for direct contact is required.
	Primary sensor	Name of the F3SJ-E/B connected nearest the power supply when series-connected.
R	Reset	Releases the interlock state/lockout state.
	Response time from ON to OFF	Time period from when the F3SJ-E/B is blocked until the safety output turns from ON to OFF.
	Restart interlock	F3SJ-B enters interlock state when it is blocked.

	Term	Description
S	Safety output (OSSD)	The sensor outputs +24 V when it is unblocked. Safety output can be used for safety applications.
	Secondary sensor	Name used for F3SJ-E/B other than the primary sensor, when series-connected.
	SELV	Stands for Safety Extra Low Voltage. An ungrounded circuit separated by double insulation or equivalent from hazardous voltage, and does not generate voltage that exceeds ELV under normal conditions and under single-fault conditions. If the nominal voltage exceeds 25 VAC or 60 VDC, protection for direct contact is required.
	Standard muting mode	This mode is used when there is enough space to install muting sensors at both ends of the F3SJ-B.
	Start interlock	The sensor enters interlock after power is turned ON.
V	Vs	Voltage value in your usage environment.

Related Standards

International Standards

- IEC 61496-1: 2012 Safety of machinery - Electro-sensitive protective equipment - Part 1: General requirements and tests
- IEC 61496-2: 2013 Safety of machinery - Electro-sensitive protective equipment - Part 2: Particular requirements for equipment using active opto-electronic protective devices
- IEC 61508-1 to 3: 2010 Functional safety of electrical/electronic/programmable electronic safety-related systems
- IEC 62061: 2005 Safety of machinery - Functional safety of safety-related electrical, electronic and programmable electronic control systems
- ISO 13849-1 Safety of machinery - Safety-related parts of control systems - Part 1: General principles for design
- ISO 13855: 2010 Safety of machinery - Positioning of safeguards with respect to the approach speeds of parts of the human body

European Standards

- EN 61496-1: 2013 Safety of machinery - Electro-sensitive protective equipment - Part 1: General requirements and tests
- EN 61496-2: 2013 Safety of machinery - Electro-sensitive protective equipment - Part 2: Particular requirements for equipment using active opto-electronic protective devices
- EN 61508-1 through -3: 2010 Functional safety of electrical/electronic/programmable electronic safetyrelated systems
- EN 415-4: 1997 Palletisers and depalletisers
- EN 692: 2005 + A1: 2009 Mechanical presses
- EN 693: 2001 + A1: 2009 Hydraulic presses
- EN ISO 13855: 2010 Safety of machinery - Positioning of safeguards with respect to the approach speeds of parts of the human body
- EN 1037: 1995 + A1: 2008 Safety of machinery : Prevention of unexpected start-up
- EN 61000-6-4: 2007/A1:2011 Electromagnetic compatibility (EMC) - Part 6-4: Generic standards - Emission standard for industrial environments
- EN 62061: 2005 Safety of machinery - Functional safety of safety-related electrical, electronic and programmable electronic control systems
- EN ISO 13849-1 Safety of machinery - Safety-related parts of control systems -- Part 1: General principles for design

US Occupational Safety and Health Standards

- OSHA 29 CFR 1910.212 General requirements for all machines
- OSHA 29 CFR 1910.217 Mechanical power presses

US Standards

- ANSI B11.1: 2009 Mechanical power presses
- ANSI B11.2: 1995 (R2005) Hydraulic power presses
- ANSI B11.3: 2002 (R2007) Power press brakes
- ANSI B11.4: 2003 (R2008) Metal shears
- ANSI B11.5: 1988 (R2008) Iron workers
- ANSI B11.6: 2001 (R2007) Lathes
- ANSI B11.7: 1995 (R2005) Cold headers and cold formers
- ANSI B11.8: 2001 (R2007) Drilling, milling, and boring machines
- ANSI B11.9: 1975 (R2005) Grinding machines
- ANSI B11.10: 2003 (R2009) Metal sawing machines
- ANSI B11.11: 2001 (R2007) Gear cutting machines
- ANSI B11.12: 2005 Roll forming and roll bending machines

- ANSI B11.13: 1992 (R2007) Single- and multiple-spindle automatic bar and chucking machines
- ANSI B11.15: 2001 Pipe, tube, and shape bending machines
- ANSI B11.16: 2003 (R2009) Metal powder compacting presses
- ANSI B11.17: 2004 (R2009) Horizontal hydraulic extrusion presses
- ANSI B11.18: 2006 Machines and machinery systems for processing strip, sheet or plate from coiled configuration
- ANSI B11.19: 2003 (R2009) Performance criteria for the design, construction, care, and operation of safeguarding when referenced by the other B11 machine tool safety standards
- ANSI/RIA 15.06: 1999 (R2009) Industrial robots & robot systems safety requirements
- UL 1998: 1998 Safety-related software
- UL 508: 1999 Industrial control equipment
- UL 61496-1: 2002 Electro-sensitive protective equipment - Part 1: General requirements and tests
- UL 61496-2: 2002 Electro-sensitive protective equipment - Part 2: Particular requirements for active optoelectronic protective devices

Canadian Standards

- CAN/CSA C22.2 No.14 Industrial control equipment
- CAN/CSA C22.2 No.08 Electronics integrated safety functions
- CSA Z142 Code for power press operation: Health, safety, and guarding requirements
- CSA Z432 Safeguarding of machinery
- CSA Z434 Industrial robots and robot systems : General safety requirements

SEMI Standards

- SEMI S2-0706 Environmental, health, and safety guideline for semiconductor manufacturing equipment

JIS Standards

- JIS B 9704-1: 2015 Safety of machinery - Electro-sensitive protective equipment - Part 1 : General requirements and tests
- JIS B 9704-2: 2008 Safety of machinery - Electro-sensitive protective equipment - Part 2 : Particular requirements for equipment using active opto-electronic protective devices

Revision History

A manual revision code appears as a suffix to the Catalog number at the bottom of the front and back covers of this manual.

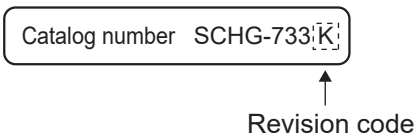

Revision code	Date	Revised contents
A	April 2011	First edition
B	November 2012	Added and modified dimensions and notes. Modified the contents about EN 61508. Corrected errors in writing.
C	July 2014	Corrected the model of the both-end connector cable for extension. Added the description of the F3SJ cable for Easy type. Corrected the switch number in the wiring example. Added the description of the switches in the remarks of the wiring diagram. Updated the dates of effect for standards. Changed the content of "Terms and Conditions Agreement". Added reduced wiring connectors and reduced wiring cables Changed the test rod as an optional accessory. Minor correction
D	July 2015	Updated the dates of effect for standards.
E	September 2017	Updated the year of the applicable standards. Corrected the contents of the ratings (input voltage) and wiring examples. Corrected the output timing chart of the wiring diagram. Deleted the part of the muting system wiring example. Added the description of the use of mounting brackets. Changed the contents about the safety distance. Added the contents about the simple wiring connector. Changed the contents about the checklists. Changed the accessories. Corrected the erroneous description.
F	July 2018	Corrected the year of the applicable standards.
G	December 2019	Updated the year of EN ISO 13849-1 and ISO 13849-1.
H	December 2020	Added information on product weight. Updated the electrical symbols in circuit diagrams. Minor corrections.
J	September, 2023	Changed Vibration and Shock resistance specifications based on revision of IEC 61496-1.
K	July 2026	Descriptions of the Machinery Regulation are added.

OMRON Corporation **Industrial Automation Company**

Kyoto, JAPAN **Contact : www.ia.omron.com**

Regional Headquarters

OMRON EUROPE B.V.
Wegalaan 67-69, 2132 JD Hoofddorp
The Netherlands
Tel: (31) 2356-81-300 Fax: (31) 2356-81-388

OMRON ELECTRONICS LLC
2895 Greenspoint Parkway, Suite 200
Hoffman Estates, IL 60169 U.S.A.
Tel: (1) 847-843-7900 Fax: (1) 847-843-7787

OMRON ASIA PACIFIC PTE. LTD.
438B Alexandra Road, #08-01/02 Alexandra
Technopark, Singapore 119968
Tel: (65) 6835-3011 Fax: (65) 6835-3011

OMRON (CHINA) CO., LTD.
Room 2211, Bank of China Tower,
200 Yin Cheng Zhong Road,
PuDong New Area, Shanghai, 200120, China
Tel: (86) 21-6023-0333 Fax: (86) 21-5037-2388

Authorized Distributor:

©OMRON Corporation 2011-2026 All Rights Reserved.
In the interest of product improvement,
specifications are subject to change without notice.

Cat. No. SCHG-733K 0726 (0411)