OMRON

Machine Automation Controller

NX-series

High-speed Counter Units

User's Manual

NX-CT□□□□

High-speed Counter

SYSMAC
always in control

W647-E1-02

NOTE

1. All rights reserved. No part of this publication may be reproduced, stored in a retrieval system, or transmitted, in any form, or by any means, mechanical, electronic, photocopying, recording, or otherwise, without the prior written permission of OMRON.
2. No patent liability is assumed with respect to the use of the information contained herein.
Moreover, because OMRON is constantly striving to improve its high-quality products, the information contained in this manual is subject to change without notice.
3. Every precaution has been taken in the preparation of this manual. Nevertheless, OMRON assumes no responsibility for errors or omissions.
Neither is any liability assumed for damages resulting from the use of the information contained in this publication.

Trademarks

- Sysmac and SYSMAC are trademarks or registered trademarks of OMRON Corporation in Japan and other countries for OMRON factory automation products.
- Microsoft, Windows, Excel, Visual Basic, and Microsoft Edge are either registered trademarks or trademarks of Microsoft Corporation in the United States and other countries.
- EtherCAT® is registered trademark and patented technology, licensed by Beckhoff Automation GmbH, Germany.
- Safety over EtherCAT® is a registered trademark and a patented technology licensed by Beckhoff Automation GmbH, Germany.
- ODVA, CIP, CompoNet, DeviceNet, and EtherNet/IP are trademarks of ODVA.
- The SD and SDHC logos are trademarks of SD-3C, LLC.

Other company names and product names in this document are the trademarks or registered trademarks of their respective companies.

Copyrights

- Microsoft product screen shots used with permission from Microsoft.

Introduction

Thank you for purchasing an NX-series High-speed Counter Unit.
This manual contains information that is necessary to use the NX-series High-speed Counter Unit.
Please read this manual and make sure you understand the functionality and performance of the NX-series High-speed Counter Unit before you attempt to use it in a control system.
Keep this manual in a safe place where it will be available for reference during operation.

Intended Audience

This manual is intended for the following personnel, who must also have knowledge of electrical systems (an electrical engineer or the equivalent).

- Personnel in charge of introducing FA systems.
- Personnel in charge of designing FA systems.
- Personnel in charge of installing and maintaining FA systems.
- Personnel in charge of managing FA systems and facilities.

For programming, this manual is intended for personnel who understand the programming language specifications in international standard IEC 61131-3 or Japanese standard JIS B 3503.

Applicable Products

This manual covers the following product.

- NX-series High-speed Counter Unit
  NX-CT□□□□

Relevant Manuals

To use the High-speed Analog Input Unit, you must refer to the manuals for all related products. Read all of the manuals that are relevant to your system configuration and application before you use the NX-series High-speed Analog Input Unit.

	(A) NX Units		System configuration					(D) Support Software		All Units	
			(B) CPU Units			(C) Slave Terminals					
	NX-series High speed Counter Units User's Manual	User's manuals for other NX Units	NX-series NX102 CPU Unit Hardware User's Manual	NX-series NX1P2 CPU Unit Hardware User's Manual	NJ/NX-series CPU Unit Software User's Manual	NX-series EtherCAT Coupler Unit User's Manual	NX-series EtherNet/IP Coupler Unit User's Manual	Sysmac Studio Version 1 Operation Manual	NX-IO Configurator Operation Manual	NX-series System Units User's Manual	NX-series Data Reference Manual
Learning about NX Units											
Specifications	○	○									
Functionality	○	○									
Application procedures	○	○									
Wiring I/O power supply terminals and power supply terminals	○	○								○	
Learning about CPU Racks of NX-series CPU Units											
Specifications			○	○	○						
System configuration			○	○	○						
Power supply system			○	○						○	
Application procedures			○	○	○						
Installation procedures			○	○							
Support Software connection procedures					○						
Performance calculations					○						○
Learning about Slave Terminals											
Specifications						○	○				
System configuration						○	○				
Power supply system						○	○			○	
Application procedures						○	○				
Installation procedures						○	○				
Support Software connection procedures						○	○				
Performance calculations						○	○				○
Making settings								○	○		
Troubleshooting											
Troubleshooting CPU Racks or Slave Terminals			○	○	○	○	○	○	○		
Troubleshooting NX Units	○	○									
Performing NX Unit maintenance	○	○									
Referencing data lists for NX Unit power consumptions, weights, etc.											○

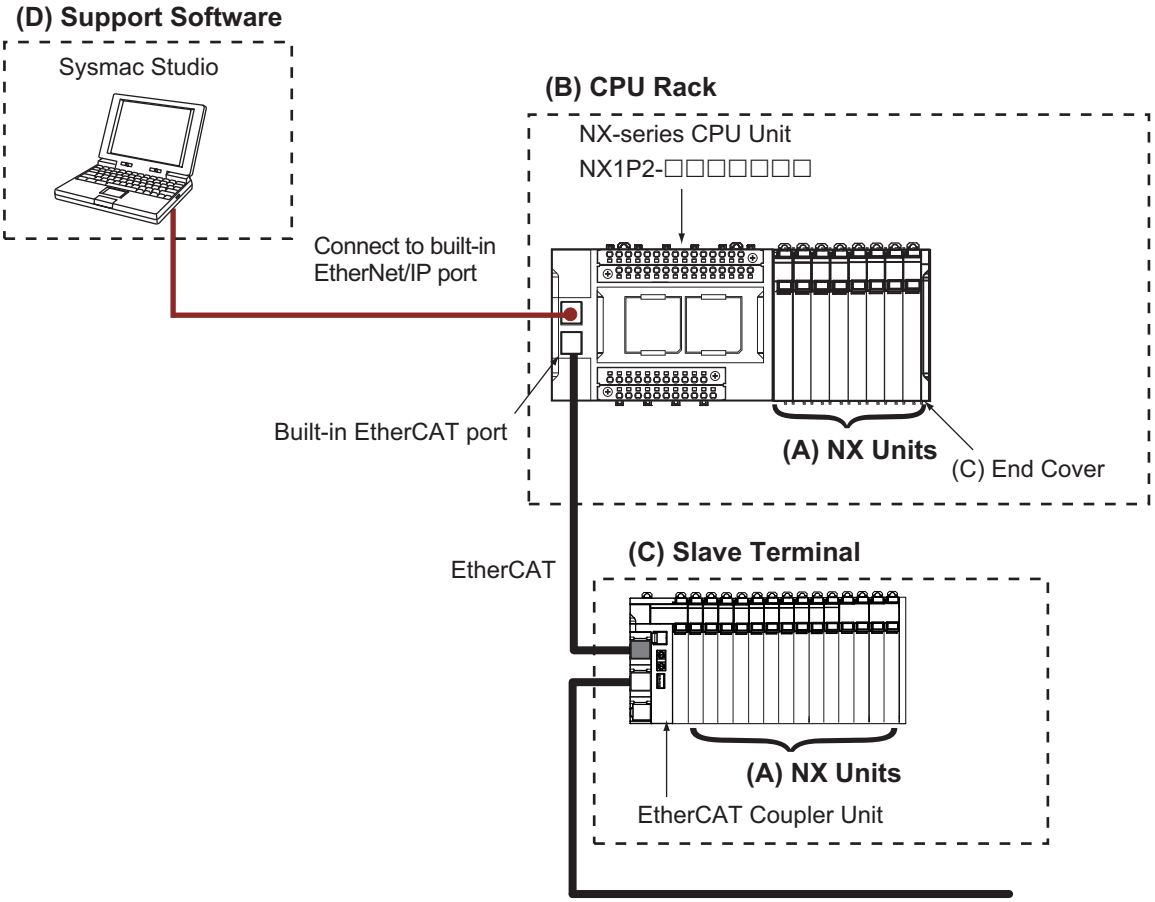
(D) Support Software
Sysmac Studio
(B) CPU Rack
NX-series CPU Unit
NX1P2-□□□□□□□□
Connect to built-in
EtherNet/IP port
Built-in EtherCAT port
(A) NX Units
(C) End Cover
EtherCAT
(C) Slave Terminal
(A) NX Units
EtherCAT Coupler Unit

Manual Structure

Page Structure

The following page structure is used in this manual.

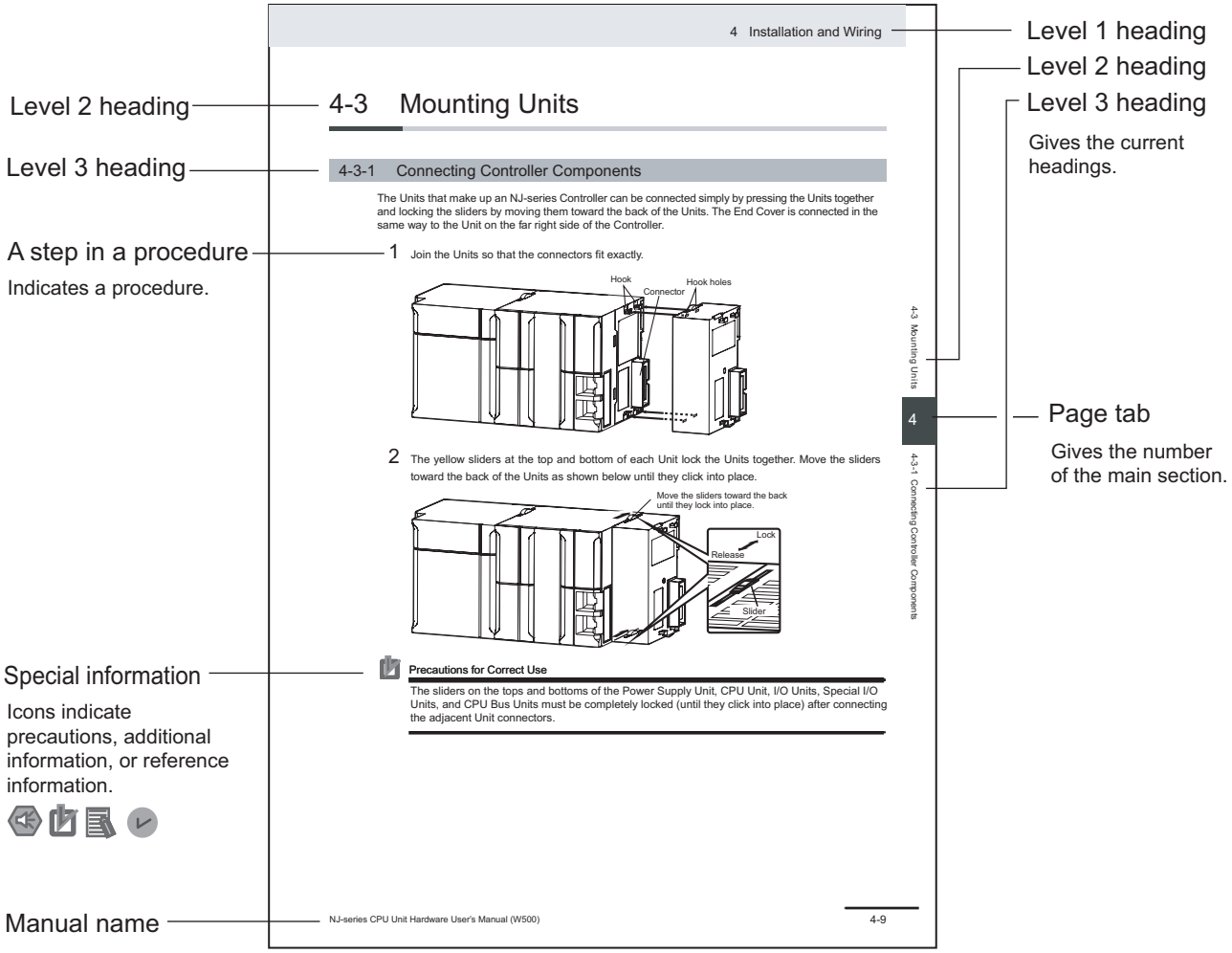

This illustration is provided only as a sample. It may not literally appear in this manual.

Special Information

Special information in this manual is classified as follows:

Precautions for Safe Use

Precautions on what to do and what not to do to ensure safe usage of the product.

Precautions for Correct Use

Precautions on what to do and what not to do to ensure proper operation and performance.

Additional Information

Additional information to read as required.
This information is provided to increase understanding or make operation easier.

Version Information

Information on differences in specifications and functionality for Controller with different unit versions and for different versions of the Sysmac Studio is given.

Precaution on Terminology

- In this manual, "download" refers to transferring data from the Support Software to a physical device and "upload" refers to transferring data from a physical device to the Support Software.
- In this manual, the directions in relation to the Units are given in the following figure, which shows upright installation.

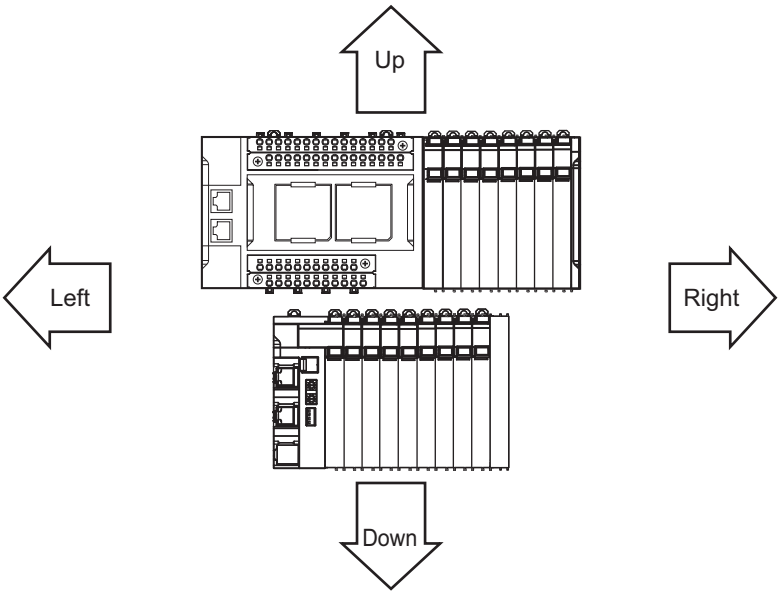

- This user's manual refers to "NY-series IPC Machine Controller Industrial Panel PCs and Industrial Box PCs" as simply "Industrial PCs" or as "NY-series Industrial PCs".

- This user’s manual refers to the "built-in EtherCAT port on an NJ/NX-series Controller" or "built-in EtherCAT port on an NY-series Industrial PC" as simply a "built-in EtherCAT port".
- This user's manual may omit manual names and manual numbers in places that refer to the user's manuals for CPU Units and Industrial PCs. The following table gives some examples.
  Examples:

Manual name	Omitted contents	Common text
NJ/NX-series CPU Unit Software User's Manual	Software user's manual for the connected CPU Unit or Industrial PC	Software User's Manual
NY-series IPC Machine Controller Industrial Panel PC / Industrial Box PC Software User’s Manual		
NJ/NX-series CPU Unit Built-in EtherCAT® Port User's Manual	User's manual for the built-in EtherCAT port on the connected CPU Unit or Industrial PC	Built-in EtherCAT port
NY-series IPC Machine Controller Industrial Panel PC / Industrial Box PC Built-in EtherCAT® Port User’s Manual		

- This user's manual may omit manual names and manual numbers in places that refer to the user's manuals for Communications Coupler Units.

If the manual names and manual numbers for CPU Units are omitted, refer to *Related Manuals* on page 31 to determine the appropriate manual based on the common text for the omitted contents.
If the manual names and manual numbers for Communications Coupler Units are omitted, refer to *Related Manuals* on page 31 to identify the manual for your Unit.

Sections in this Manual

1 Features and System Configuration

2 Specifications and Application Procedures

3 Part Names and Functions

4 Installation and Wiring

5 I/O Refreshing

6 I/O Data and List of Settings

7 Functions

8 Troubleshooting

9 Inspection and Maintenance

A Appendices

I Index

CONTENTS

Introduction **1**
Intended Audience 1
Applicable Products 1

Relevant Manuals **2**

Manual Structure **4**
Page Structure 4
Special Information 5
Precaution on Terminology 5

Sections in this Manual **7**

Terms and Conditions Agreement **13**
Warranty, Limitations of Liability 13
Application Considerations 14
Disclaimers 14
Statement of security responsibilities for assumed use cases and against threats 15

Safety Precautions **16**
Definition of Precautionary Information 16
Symbols 16
Warnings 17
Cautions 19

Precautions for Safe Use **20**

Precautions for Correct Use **25**

Regulations and Standards **27**
Conformance to EMC and Electrical Safety Regulations 27
Conformance to UL and CSA Standards 28
Conformance to Shipbuilding Standards 28
Conformance to KC Certification 28
Software Licenses and Copyrights 28

Unit Versions **29**
Unit Versions 29

Related Manuals **31**

Terminology **35**

Revision History **37**

Section 1 Features and System Configuration

1-1 Features of High-speed Counter Units **1-2**

1-2 System Configuration **1-5**
1-2-1 System Configuration in the Case of a CPU Unit 1-5
1-2-2 System Configuration of Slave Terminals 1-6
1-2-3 Application System Configuration Example 1-9

1-3 Model **1-10**
1-3-1 Model Notation 1-10
1-3-2 Models 1-11
1-4 List of Functions **1-12**
1-4-1 Functions in 2ch Mode 1-12
1-4-2 Functions in 6ch Mode 1-15
1-5 Support Software **1-17**

Section 2 Specifications and Application Procedures

2-1 Specifications **2-2**
2-1-1 General Specifications 2-2
2-1-2 Individual Specifications 2-2
2-2 Operating Procedures **2-3**

Section 3 Part Names and Functions

3-1 Part Names **3-2**
3-2 Indicators **3-3**
3-2-1 TS LED 3-4
3-2-2 Counter Operation LED 3-5
3-2-3 Counter Input LED 3-6
3-2-4 External I/O LED 3-7
3-3 Terminal Blocks **3-8**

Section 4 Installation and Wiring

4-1 Installing NX Units **4-2**
4-2 Power Supply Types and Wiring **4-3**
4-2-1 Power supply type 4-3
4-2-2 Counter Input/External Input Power Supply 4-3
4-2-3 External Output Power Supply 4-5
4-3 Wiring the Terminals **4-6**
4-3-1 Wiring to the Screwless Clamping Terminal Blocks 4-6
4-3-2 Preventing Incorrect Attachment of Terminal Blocks 4-16
4-3-3 Checking the Wiring 4-19
4-4 Terminal Block Arrangement and Wiring Example **4-20**
4-4-1 NX-CT2120 4-20
4-4-2 NX-CT2220 4-25
4-4-3 NX-CT2320 4-29
4-4-4 NX-CT2420 4-33
4-5 Precautions for Wiring **4-37**
4-5-1 When Prone to the Effects of Noise 4-37
4-5-2 Precautions When Connecting a Two-wire DC Sensor 4-39

Section 5 I/O Refreshing

5-1 I/O Refreshing **5-2**
5-1-1 I/O Refreshing from CPU Units to NX Units 5-2
5-1-2 I/O Refreshing from CPU Units or Industrial PCs to Slave Terminal 5-3
5-1-3 Calculating the I/O Response Times of NX Units 5-5
5-2 I/O Refreshing Methods **5-6**

5-2-1 Types of I/O Refreshing Methods 5-6
5-2-2 Setting the I/O Refreshing Methods 5-8
5-2-3 Restrictions in Refresh Cycles 5-9
5-2-4 Operation of Free-Run Refreshing 5-9
5-2-5 Operation of Synchronous I/O Refreshing 5-10
5-2-6 Operation of Task Period Prioritized Refreshing 5-15

Section 6 I/O Data and List of Settings

6-1 Specifications of I/O Data 6-2
6-1-1 Data Items for Allocation to I/O 6-2
6-1-2 Aggregated Data Details 6-11

6-2 List of Settings 6-38
6-2-1 Counter Mode Switching Function Parameters 6-38
6-2-2 Counter Function Parameters 6-39
6-2-3 External Input Function Parameters 6-54
6-2-4 Comparison Function Parameters 6-55
6-2-5 External Output Function Parameters 6-63

Section 7 Functions

7-1 Function Block Diagram 7-3
7-1-1 Counter Mode Switching Function 7-4
7-1-2 Counter Functions 7-5
7-1-3 External Input Function 7-6
7-1-4 Comparison Function 7-7
7-1-5 External Output Function 7-11

7-2 Counter Mode Switching Function 7-12
7-2-1 Overview and Applications 7-12
7-2-2 Details on the Function 7-12
7-2-3 Setting Method 7-13

7-3 Counter Functions 7-15
7-3-1 Counter Noise Filter 7-15
7-3-2 Pulse Input Method 7-19
7-3-3 Count Direction 7-23
7-3-4 Counter Types 7-26
7-3-5 Gate control 7-28
7-3-6 Counter reset 7-30
7-3-7 Counter Preset 7-35
7-3-8 Counter Latch 7-40
7-3-9 Counter Log Function 7-44
7-3-10 Pulse Rate Measurement Function 7-49
7-3-11 Pulse Period Measurement Function 7-50
7-3-12 Time Stamping 7-54

7-4 External Input Function 7-55
7-4-1 External Input Noise Filter 7-55
7-4-2 External Input Status 7-56
7-4-3 External Input Function Selection 7-57

7-5 Comparison Function 7-59
7-5-1 Comparison Function Mode Switching 7-59
7-5-2 Target Comparison 7-61
7-5-3 2ch mode Range Comparison 7-75
7-5-4 6ch mode Range Comparison 7-86

7-6 External Output Function 7-90
7-6-1 Output Delay Function 7-90
7-6-2 PWM Output Function 7-93
7-6-3 External Output Force ON/OFF Function 7-96
7-6-4 External Output Status 7-97

7-6-5 Load Rejection External Output Setting 7-98

Section 8 Troubleshooting

8-1 How to Check for Errors 8-2

8-2 Checking for Errors with the Indicators 8-3

8-3 Checking for Errors and Troubleshooting on the Support Software 8-5

8-3-1 Checking for Errors from the Sysmac Studio 8-5
8-3-2 Checking for Errors from Support Software Other Than the Sysmac Studio 8-6
8-3-3 Error Table 8-6
8-3-4 Meaning of Error 8-11

8-4 Resetting Errors 8-24

8-5 Unit-specific Troubleshooting 8-25

8-6 Troubleshooting Flowchart 8-28

Section 9 Inspection and Maintenance

9-1 Cleaning and Inspection 9-2

9-1-1 Cleaning 9-2
9-1-2 Periodic Inspections 9-2

9-2 Maintenance Procedures 9-5

Appendices

A-1 Data Sheet A-2

A-1-1 Models A-2
A-1-2 High-speed Counter Units A-3
A-1-3 Counter Input Timing Specifications A-19
A-1-4 PWM Output Timing Specifications A-22
A-1-5 Installation Orientation and Restrictions A-23

A-2 Dimensions A-26

A-3 List of NX Objects A-28

A-3-1 Format of NX Object Descriptions A-28
A-3-2 Unit Information Objects A-28
A-3-3 Objects That Accept I/O Allocations A-31
A-3-4 Other Objects A-44

A-4 Sample Programming A-61

A-4-1 Counter Log Data Read A-61
A-4-2 Writing/Reading Target Comparison Data A-67
A-4-3 2ch Mode Writing/Reading Range Comparison Data A-75

A-5 Advance Time Error A-83

A-5-1 Errors Due to Counter Resolution A-83
A-5-2 Counter Value Calculation Error per 1 μs A-84

A-6 Version Information with CPU Units A-86

A-6-1 Relationship between Unit Versions of Units A-86

A-7 Version Information with Communications Coupler Units A-87

A-7-1 Connection to an EtherCAT Coupler Unit A-87
A-7-2 Connection to an EtherNet/IP Coupler Unit A-88

A-8 Displaying the Edit Unit Operation Settings Tab Page A-90

A-8-1 Connection to the CPU Unit A-90
A-8-2 Slave Terminal A-91

A-9 Edit Unit Operation Settings Tab Page A-93

Index

Terms and Conditions Agreement

Warranty, Limitations of Liability

Warranties

Exclusive Warranty

Omron's exclusive warranty is that the Products will be free from defects in materials and workmanship for a period of twelve months from the date of sale by Omron (or such other period expressed in writing by Omron). Omron disclaims all other warranties, express or implied.

Limitations

OMRON MAKES NO WARRANTY OR REPRESENTATION, EXPRESS OR IMPLIED, ABOUT NON-INFRINGEMENT, MERCHANTABILITY OR FITNESS FOR A PARTICULAR PURPOSE OF THE PRODUCTS. BUYER ACKNOWLEDGES THAT IT ALONE HAS DETERMINED THAT THE PRODUCTS WILL SUITABLY MEET THE REQUIREMENTS OF THEIR INTENDED USE.

Omron further disclaims all warranties and responsibility of any type for claims or expenses based on infringement by the Products or otherwise of any intellectual property right.

Buyer Remedy

Omron's sole obligation hereunder shall be, at Omron's election, to (i) replace (in the form originally shipped with Buyer responsible for labor charges for removal or replacement thereof) the non-complying Product, (ii) repair the non-complying Product, or (iii) repay or credit Buyer an amount equal to the purchase price of the non-complying Product; provided that in no event shall Omron be responsible for warranty, repair, indemnity or any other claims or expenses regarding the Products unless Omron's analysis confirms that the Products were properly handled, stored, installed and maintained and not subject to contamination, abuse, misuse or inappropriate modification. Return of any Products by Buyer must be approved in writing by Omron before shipment. Omron Companies shall not be liable for the suitability or unsuitability or the results from the use of Products in combination with any electrical or electronic components, circuits, system assemblies or any other materials or substances or environments. Any advice, recommendations or information given orally or in writing, are not to be construed as an amendment or addition to the above warranty.

See https://www.omron.com/global/ or contact your Omron representative for published information.

Limitation on Liability; Etc

OMRON COMPANIES SHALL NOT BE LIABLE FOR SPECIAL, INDIRECT, INCIDENTAL, OR CONSEQUENTIAL DAMAGES, LOSS OF PROFITS OR PRODUCTION OR COMMERCIAL LOSS IN ANY

WAY CONNECTED WITH THE PRODUCTS, WHETHER SUCH CLAIM IS BASED IN CONTRACT, WARRANTY, NEGLIGENCE OR STRICT LIABILITY.

Further, in no event shall liability of Omron Companies exceed the individual price of the Product on which liability is asserted.

Application Considerations

Suitability of Use

Omron Companies shall not be responsible for conformity with any standards, codes or regulations which apply to the combination of the Product in the Buyer's application or use of the Product. At Buyer's request, Omron will provide applicable third party certification documents identifying ratings and limitations of use which apply to the Product. This information by itself is not sufficient for a complete determination of the suitability of the Product in combination with the end product, machine, system, or other application or use. Buyer shall be solely responsible for determining appropriateness of the particular Product with respect to Buyer's application, product or system. Buyer shall take application responsibility in all cases.

NEVER USE THE PRODUCT FOR AN APPLICATION INVOLVING SERIOUS RISK TO LIFE OR PROPERTY OR IN LARGE QUANTITIES WITHOUT ENSURING THAT THE SYSTEM AS A WHOLE HAS BEEN DESIGNED TO ADDRESS THE RISKS, AND THAT THE OMRON PRODUCT(S) IS PROPERLY RATED AND INSTALLED FOR THE INTENDED USE WITHIN THE OVERALL EQUIPMENT OR SYSTEM.

Programmable Products

Omron Companies shall not be responsible for the user's programming of a programmable Product, or any consequence thereof.

Disclaimers

Performance Data

Data presented in Omron Company websites, catalogs and other materials is provided as a guide for the user in determining suitability and does not constitute a warranty. It may represent the result of Omron's test conditions, and the user must correlate it to actual application requirements. Actual performance is subject to the Omron's Warranty and Limitations of Liability.

Change in Specifications

Product specifications and accessories may be changed at any time based on improvements and other reasons. It is our practice to change part numbers when published ratings or features are changed, or when significant construction changes are made. However, some specifications of the Product may

be changed without any notice. When in doubt, special part numbers may be assigned to fix or establish key specifications for your application. Please consult with your Omron's representative at any time to confirm actual specifications of purchased Product.

Errors and Omissions

Information presented by Omron Companies has been checked and is believed to be accurate; however, no responsibility is assumed for clerical, typographical or proofreading errors or omissions.

Statement of security responsibilities for assumed use cases and against threats

OMRON SHALL NOT BE RESPONSIBLE AND/OR LIABLE FOR ANY LOSS, DAMAGE, OR EXPENSES DIRECTLY OR INDIRECTLY RESULTING FROM THE INFECTION OF OMRON PRODUCTS, ANY SOFTWARE INSTALLED THEREON OR ANY COMPUTER EQUIPMENT, COMPUTER PROGRAMS, NETWORKS, DATABASES OR OTHER PROPRIETARY MATERIAL CONNECTED THERETO BY DISTRIBUTED DENIAL OF SERVICE ATTACK, COMPUTER VIRUSES, OTHER TECHNOLOGICALLY HARMFUL MATERIAL AND/OR UNAUTHORIZED ACCESS.

It shall be the users sole responsibility to determine and use adequate measures and checkpoints to satisfy the users particular requirements for (i) antivirus protection, (ii) data input and output, (iii) maintaining a means for reconstruction of lost data, (iv) preventing Omron Products and/or software installed thereon from being infected with computer viruses and (v) protecting Omron Products from unauthorized access.

Safety Precautions

Definition of Precautionary Information

The following notation is used in this manual to provide precautions required to ensure safe usage of the NX-series High-speed Counter Units.
The safety precautions that are provided are extremely important to safety. Always read and heed the information provided in all safety precautions.
The following notation is used.

WARNING	Indicates a potentially hazardous situation which, if not avoided, could result in death or serious injury. Additionally, there may be severe property damage.
Caution	Indicates a potentially hazardous situation which, if not avoided, may result in minor or moderate injury, or property damage.

Symbols

	The circle and slash symbol indicates operations that you must not do. The specific operation is shown in the circle and explained in text. This example indicates prohibiting disassembly.
	The triangle symbol indicates precautions (including warnings). The specific operation is shown in the triangle and explained in text. This example indicates a precaution for electric shock.
	The triangle symbol indicates precautions (including warnings). The specific operation is shown in the triangle and explained in text. This example indicates a general precaution.
	The filled circle symbol indicates operations that you must do. The specific operation is shown in the circle and explained in text. This example shows a general precaution for something that you must do.

Warnings

⚠ WARNING

During Power Supply

Do not touch the terminal section while power is ON.
Electric shock may occur.

Do not attempt to take any Unit apart.
In particular, high-voltage parts are present in Units that supply power while power is supplied or immediately after power is turned OFF. Touching any of these parts may result in electric shock. There are sharp parts inside the Unit that may cause injury.

Fail-safe Measures

Provide safety measures in external circuits to ensure safety in the system if an abnormality occurs due to malfunction of the CPU Unit, Industrial PC, other Units, or slaves or due to other external factors affecting operation.
Not doing so may result in serious accidents due to incorrect operation.

Emergency stop circuits, interlock circuits, limit circuits, and similar safety measures must be provided in external control circuits.

The CPU Unit or Industrial PC will turn OFF all outputs from Output Units in the following cases. The remote I/O slaves will operate according to the settings in the slaves.
- If a power supply error occurs.
- If the power supply connection becomes faulty.
- If a CPU watchdog timer error or CPU reset occurs.
- If a Controller error in the major fault level occurs.
- While the CPU Unit is on standby until RUN mode is entered after the power is turned ON

External safety measures must be provided to ensure safe operation of the system in such cases.

The outputs may remain ON or OFF due to deposition or burning of the output relays or destruction of the output transistors. As a countermeasure for such problems, external safety measures must be provided to ensure safe operation of the system.

If external power supplies for slaves or other devices are overloaded or short-circuited, the voltage will drop, outputs will turn OFF, and the system may be unable to read inputs. Provide external safety measures in control with monitoring of external power supply voltage as required so that the system operates safely in such a case.

You must take fail-safe measures to ensure safety in the event of incorrect, missing, or abnormal signals caused by broken signal lines, momentary power interruptions, or other causes.
Not doing so may result in serious accidents due to incorrect operation.

Voltage and Current Inputs

Make sure that the voltages and currents that are input to the Units and slaves are within the specified ranges.
Inputting voltages or currents that are outside of the specified ranges may cause accidents or fire.

Transferring

Always confirm safety at the destination node before you transfer Unit configuration information, parameters, settings, or other data from tools such as the Sysmac Studio.
The devices or machines may operate unexpectedly, regardless of the operating mode of the Controller.

Cautions

⚠ Caution

Wiring

When you connect a computer or other peripheral device to a Communications Coupler Unit that has a non-isolated DC power supply, either ground the 0-V side of the external power supply (i.e. Unit power supply) or do not ground it at all.
If the peripheral devices are grounded incorrectly, the external power supply (i.e. Unit power supply) may be short-circuited.
Never ground the 24-V side of the power supply, as shown in the following figure.

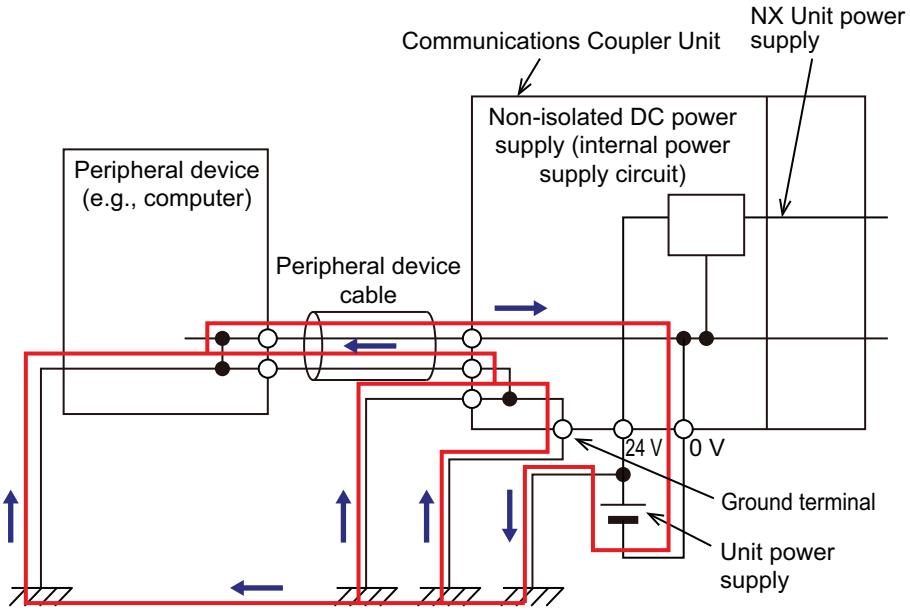

Online Editing

Execute online editing only after confirming that no adverse effects will be caused by deviations in the timing of I/O. If you perform online editing, the task execution time may exceed the task period, I/O may not be refreshed with external devices, input signals may not be read, and output timing may change.

Precautions for Safe Use

Transporting

- When transporting any Unit, use the special packing box for it.
  Also, do not subject the Unit to excessive vibration or shock during transportation.
- Do not drop any Unit or subject it to abnormal vibration or shock.
  Doing so may result in Unit malfunction or burning.

Mounting

- Mount terminal blocks and connectors only after checking the mounting location carefully.
- Be sure that the terminal blocks, expansion cables, and other items with locking devices are properly locked into place.

Installation

- Always turn OFF the power supply before installing the Unit. If the power supply is not OFF, the Unit may malfunction or may be damaged.
- Always turn OFF the Unit power supply and I/O power supply before you remove the NX Unit.
- Do not apply labels or tape to the Unit. When the Unit is installed or removed, adhesive or scraps may adhere to the pins in the NX bus connector, which may result in malfunctions.
- Do not touch the pins in the NX bus connector on the Unit. Dirt may adhere to the pins in the NX bus connector, which may result in malfunctions.

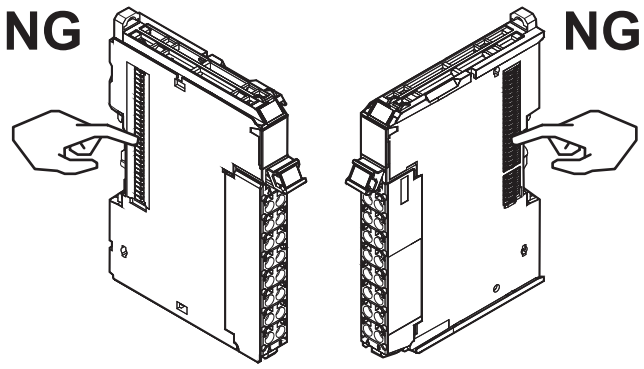

Example: NX Unit (12 mm width)

- Do not write on an NX Unit with ink within the restricted region that is shown in the following figure. Also do not get this area dirty. When the Unit is installed or removed, ink or dirt may adhere to the pins in the NX bus connector, which may result in malfunctions in the CPU Rack or the Slave Terminal.
  Refer to the user's manual for the connected CPU Unit, Communications Coupler Unit, or Communication Control Unit for details on the restricted region on the CPU Unit, Communications Coupler Unit, or Communication Control Unit.

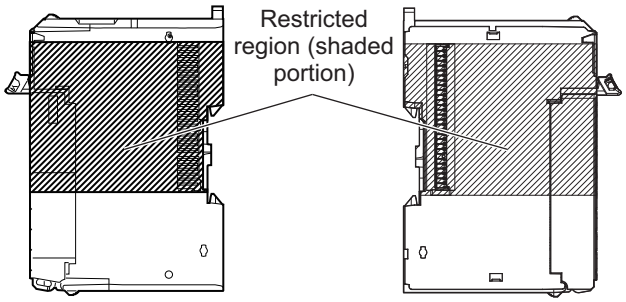

- For the installation orientations in the following figure, support the cables, e.g., with a duct, so that the End Plate on the bottom is not subjected to the weight of the cables. The weight of the cables may cause the bottom End Plate to slide downward so that the Slave Terminal is no longer secured to the DIN Track, which may result in malfunctions.

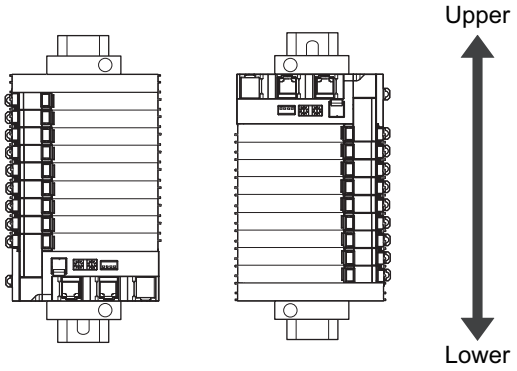

Wiring

- Double-check all switches and other settings and double-check all wiring to make sure that they are correct before turning ON the power supply.
- Use the correct wiring parts and tools when you wire the system.
- Do not pull on the cables or bend the cables beyond their natural limit. Also, do not place heavy objects on top of the cables or other wiring lines. Doing so may break the cable.
- When wiring or installing the Units, do not allow metal fragments to enter the Units.
- Do not press the flat-blade screwdriver straight into the release holes on a screwless clamping terminal block. Doing so may damage the terminal block.

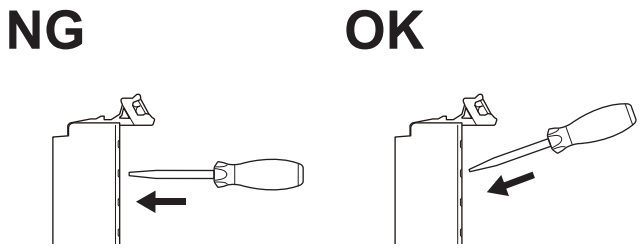

- When you insert a flat-blade screwdriver into a release hole on a screwless clamping terminal block, press it down with a force of 30N or less. Applying excessive force may damage the terminal block.
- Do not incline or twist the flat-blade screwdriver while it is in a release hole on a screwless clamping terminal block. Doing so may damage the terminal block.

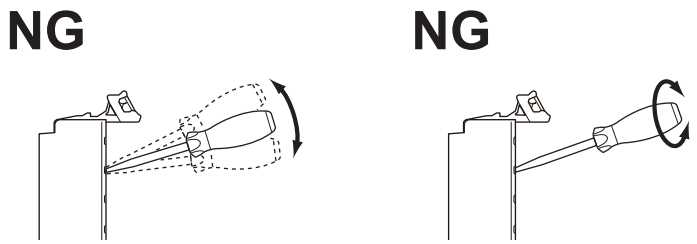

Power Supply Design

- Use all Units within the I/O power supply ranges that are given in the specifications.
- The I/O power supply current for the CPU Rack with an NX-series CPU Unit should be within the range specified for the CPU Unit model. For example, use the NX1P2 CPU Unit with a current of 4 A or less. Using the currents that are outside of the specifications may cause failure or corruption. Refer to the user's manual for the connected CPU Unit for the I/O power supply current for the CPU Unit model.
- Supply sufficient power according to the contents of this manual.
- Use the power supply voltage that is specified in this manual.
- Do not apply voltages that exceed the rated value to any Input Unit.
- Do not apply voltages or connect loads to the Output Units or slaves in excess of the maximum ratings.
- Inrush current occurs when the power supply is turned ON. When selecting fuses or breakers for external circuits, consider their fusing and detection characteristics as well as the above precautions and allow sufficient margin in shut-off performance.
- Install external breakers and take other safety measures against short-circuiting and overcurrents in external wiring.
- Always turn ON power to the I/O power supply before turning ON power to the devices on the load side. If the I/O power supply is turned ON after the power supply of the devices on the load side, temporary errors may result in the devices on the load side because the output terminals will momentarily turn ON when power is turned ON to the I/O power supply.

Turning ON the Power Supply

- When you set the Operating Mode at Startup, confirm that no adverse effect will occur in the system.

Actual Operation

- Before you start operation, always register the NX Units that are connected to the Communications Coupler Unit in the host communications master as the Unit Configuration Information.
- Check the user program, data, and parameter settings for proper execution before you use them for actual operation.
- If you change the fail-soft operation setting, the output status when the error occurs may also change. Confirm safety before you change the fail-soft operation setting.

- If you use fail-soft operation, write programming to determine whether Unit I/O data is valid. Without such programming, the user program cannot distinguish between Units for which I/O refreshing is continued and Units for which I/O refreshing is stopped.

Turning OFF the Power Supply

- Do not disconnect the cable or turn OFF the power supply to the Controller or a Slave Terminal when downloading data or the user program from the Support Software.
- Always turn OFF the external power supply to the Units before attempting any of the following.
  a) Mounting or removing an NX Unit, Communications Coupler Unit, CPU Unit, Industrial PC, or Communication Control Unit
  b) Assembling Units
  c) Setting DIP switches or rotary switches
  d) Connecting or wiring cables
  e) Attaching or removing terminal blocks or connectors

  Units that supply power continue to supply power to the Units for up to several seconds after the power supply is turned OFF. The PWR indicator remains lit as long as power is supplied. Confirm that the PWR indicator is not lit before you perform any of the above.

Operation

- Confirm that the controlled system will not be adversely affected before you perform any of the following operations.
  a) Changing the operating mode of the CPU Unit or Industrial PC (including changing the setting of the Operating Mode at Startup)
  b) Changing the user program or settings
  c) Changing set values or present values
  d) Forced refreshing
- Always sufficiently check the safety at the connected devices before you change the settings of a slave or Unit.

General Communications

- Do not exceed the ranges that are given in the specifications for the communications distance and number of connected Units.
- Refer to the user’s manual for the Communications Coupler Unit for precautions for the safe use of communications with the connected Communications Coupler Unit.

Unit Replacement

- When you replace a Unit, start operation only after you transfer the settings and variables that are required for operation to the new Unit.

Disposal

- Dispose of the product according to local ordinances as they apply.

Precautions for Correct Use

Storage, Mounting, and Wiring

- Follow the instructions in this manual to correctly perform installation and wiring.
- Do not operate or store the Units in the following locations. Doing so may result in malfunction, in operation stopping, or in burning.
  Locations subject to direct sunlight
  Locations subject to temperatures or humidity outside the range specified in the specifications
  Locations subject to condensation as the result of severe changes in temperature
  Locations subject to corrosive or flammable gases
  Locations subject to dust (especially iron dust) or salts
  Locations subject to exposure to water, oil, or chemicals
  Locations subject to shock or vibration
- Take appropriate and sufficient countermeasures during installation in the following locations.
  Locations subject to strong, high-frequency noise
  Locations subject to static electricity or other forms of noise
  Locations subject to strong electromagnetic fields
  Locations subject to possible exposure to radioactivity
  Locations close to power lines
- Before touching a Unit, be sure to first touch a grounded metallic object in order to discharge any static build-up.
- Use the rated power supply voltage for the Units that supply power. Take appropriate measures to ensure that the specified power with the rated voltage and frequency is supplied in places where the power supply is unstable.
- Install the Units away from sources of heat and ensure proper ventilation. Not doing so may result in malfunction, in operation stopping, or in burning.
- Do not allow foreign matter to enter the openings in the Unit. Doing so may result in Unit burning, electric shock, or failure.

Actual Operation

- If you change the event level of an error, the output status when the error occurs may also change. Confirm safety before you change an event level.

Turning OFF the Power Supply

- Do not turn OFF the power supply while data is being transferred.
- Do not turn OFF the power supply while parameters are being written to the CPU Unit, Communications Coupler Unit, Communication Control Unit, or NX Units.

General Communications

- Refer to the user's manual for the Communications Coupler Unit for precautions for the correct use of communications with the connected Communications Coupler Unit.

Regulations and Standards

Conformance to EMC and Electrical Safety Regulations

Concepts

OMRON products are industrial electrical devices that are incorporated into various types of machines and manufacturing equipment. The products conform to relevant standards so that the machines and equipment incorporating the OMRON products can comply with EMC and Electrical Safety Regulations more easily.

Refer to the OMRON website (http://www.ia.omron.com/) or consult your OMRON representative for the applicable standards.

● Conformance to EMC regulations

This product complies with EMC regulations when assembled in a PLC system or Machine Automation Controller.
To ensure that your machine or equipment complies with EMC regulations, please observe the following precautions.

- This product is defined as an in-panel device and must be installed within a control panel.
- This product complies with the emission standards. For the radiated emission requirements, in particular, please note that the actual emission varies depending on the configuration of the control panel to be used, the connected devices, and wiring methods. Therefore, customers themselves must confirm that the entire machine or equipment conforms to EMC regulations, even you are using a device that conforms to EMC regulations.

Caution:
This equipment is not intended for use in residential environments and may not provide adequate protection to radio reception in such environments.

● Conformance to Electrical Safety regulations

This product complies with Electrical Safety regulations required by specific laws and regulations such as the EU Directive and UKCA.
For precautions for each product, see the instruction manual included with the product.

To ensure that the machine or device in which the NX-series Units are used complies with EMC and Electrical safety regulations, the following precautions must be observed.

- The NX-series Units must be installed within a control panel.
- You must use SELV power supply for the DC power supplies that are connected as the Unit power supplies and I/O power supplies for the NX-series Units.
  EMC standard compliance was confirmed for the recommended Power Supplies.
  Refer to the user's manual for the connected CPU Unit for the recommended power supplies for the CPU Rack with an NX-series CPU Unit. Refer to the user's manual for the connected Communications Coupler Unit for the recommended power supplies for the Slave Terminal.

- You must use power supplies with an output hold time of 10 ms or longer for the DC power supplies that are connected as the Unit power supplies and I/O power supplies for the NX-series Units.

Conformance to UL and CSA Standards

Some NX-series products comply with UL and CSA standards.
If you use an NX-series product that complies with UL or CSA standards and the machinery or system in which you use the NX-series product must also comply with the standards, refer to the *Instruction Sheet* that is provided with the product. The *Instruction Sheet* provides the application conditions for complying with the standards.

Conformance to Shipbuilding Standards

Some NX-series products comply with shipbuilding standards.
If you use an NX-series product that complies with shipbuilding standards and the machinery or system in which you use the NX-series product must also comply with the standards, consult with your OMRON representative. Application conditions are defined according to the installation location. Application may not be possible for some installation locations.
For usage conditions for shipbuilding standards, refer to *Conformance to Shipping Standards* in the user's manual for the CPU Unit or Communications Coupler Unit that the NX Units are connected to. Note that the usage conditions are provided in the relevant user's manuals for Units whose conformance to shipbuilding standards is confirmed.

Conformance to KC Certification

Observe the following precaution if you use NX-series Units in Korea.

A급 기기 (업무용 방송통신기자재)
이 기기는 업무용(A급) 전자파적합기기로서 판매자
또는 사용자는 이 점을 주의하시기 바라며, 가정외의
지역에서 사용하는 것을 목적으로 합니다.

Class A Device (Broadcasting Communications Device for Office Use)
This device obtained EMC registration for office use (Class A), and it is intended to be used in places other than homes.
Sellers and/or users need to take note of this.

Software Licenses and Copyrights

This product incorporates certain third party software. The license and copyright information associated with this software is available at http://www.fa.omron.co.jp/nj_info_e/.

Unit Versions

This section describes the notation that is used for unit versions, the confirmation method for unit versions, and the relationship between unit versions and Support Software versions.

Unit Versions

A “unit version” has been introduced to manage the Units in the NX Series according to differences in functionality accompanying Unit upgrades.
An example is provided below for Communications Coupler Units and NX Units. For the notation that is used for the unit versions of CPU Units or Industrial PCs and the confirmation method for unit versions, refer to the user's manual for each Unit.

Notation of Unit Versions on Products

The unit version is given with the Unit specifications on the side of the Unit or in the notched area.

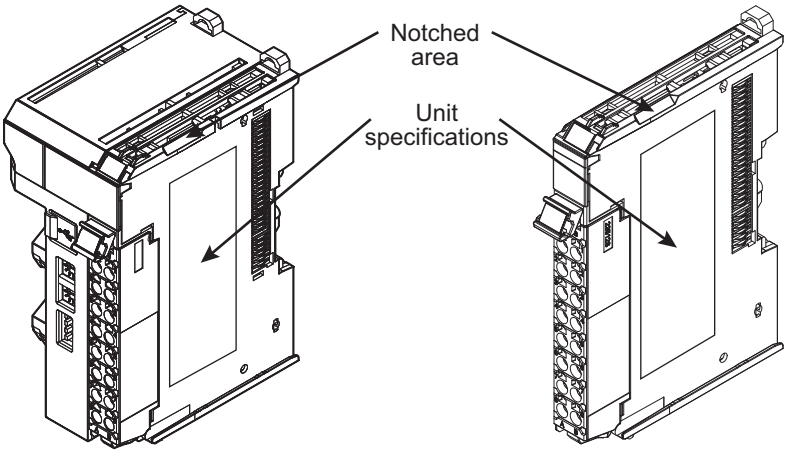

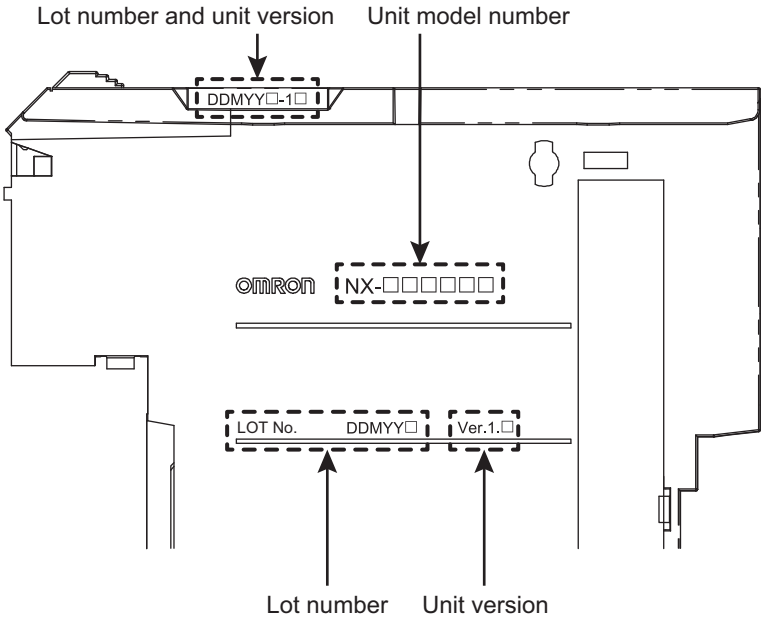

The following information is provided in the Unit specifications on the Unit.

Name	Function
Unit model number	Gives the model of the Unit.
Unit version	Gives the unit version of the Unit.
Lot number	Gives the lot number of the Unit. DDMYY□: Lot number, □: Used by OMRON. “M” gives the month (1 to 9: January to September, X: October, Y: November, Z: December)

The following information is provided in the notched area on the Unit.

Name	Function
Lot number and unit version	Gives the lot number and unit version of the Unit. • DDMYY□: Lot number, □: Used by OMRON. “M” gives the month (1 to 9: January to September, X: October, Y: November, Z: December) • 1□: Unit version The decimal portion of the unit version is omitted. (It is provided in the Unit specifications.)

Confirming Unit Versions with the Support Software

If your NX Unit is connected to a CPU Unit, refer to the user’s manual of the connected CPU Unit for the confirmation method for the unit version of the NX Unit.
If your NX Unit is connected to a Communications Coupler Unit, refer to the user’s manual of the connected Communications Coupler Unit for the confirmation method for the unit version of the Communications Coupler Unit and NX Unit.

Related Manuals

The following table shows related manuals. Use these manuals for reference.

Manual name	Cat. No.	Model numbers	Application	Description
NX-series High-speed Counter Units User's Manual	W647	NX-CT□□□□	Learning how to use NX-series High-speed Counter Units.	The hardware, setup methods, and functions of the NX-series High-speed Counter Units are described.
NX-series Data Reference Manual	W525	NX-□□□□□□	Referencing lists of the data that is required to configure systems with NX-series Units.	Lists of the power consumptions, weights, and other NX Unit data that is required to configure systems with NX-series Units are provided.
NX-series System Units User's Manual	W523	NX-PD1□□□ NX-PF0□□□ NX-PC0□□□ NX-TBX01	Learning how to use NX-series System Units.	The hardware and functions of the NX-series System Units are described.
Sysmac Studio Version 1 Operation Manual	W504	SYSMAC -SE2□□□	Learning about the operating procedures and functions of the Sysmac Studio.	Describes the operating procedures of the Sysmac Studio.
NX-IO Configurator Operation Manual	W585	CXONE- AL□□D-V4	Learning about the operating procedures and functions of the NX-IO Configurator.	Describes the operating procedures of the NX-IO Configurator.
NJ/NX-series Troubleshooting Manual	W503	NX701-□□□□ NX502-□□□□ NX102-□□□□ NX1P2-□□□□ NJ501-□□□□ NJ301-□□□□ NJ101-□□□□	Learning about the errors that may be detected in an NJ/NX-series Controller.	Concepts on managing errors that may be detected in an NJ/NX-series Controller and information on individual errors are described.
NY-series Troubleshooting Manual	W564	NY532-□□□□ NY512-□□□□	Learning about the errors that may be detected in an NY-series Industrial PC.	Concepts on managing errors that may be detected in an NY-series Controller and information on individual errors are described.
NX-series EtherCAT® Coupler Unit User's Manual	W519	NX-ECC20□	Learning how to use an NX-series EtherCAT Coupler Unit and EtherCAT Slave Terminals.	The following items are described: the overall system and configuration methods of an EtherCAT Slave Terminal (which consists of an NX-series EtherCAT Coupler Unit and NX Units), and information on hardware, setup, and functions to set up, control, and monitor NX Units through EtherCAT.

Manual name	Cat. No.	Model numbers	Application	Description
NX-series EtherNet/IP™ Coupler Unit User's Manual	W536	NX-EIC202	Learning how to use an NX-series EtherNet/IP Coupler Unit and EtherNet/IP Slave Terminals.	The following items are described: the overall system and configuration methods of an EtherNet/IP Slave Terminal (which consists of an NX-series EtherNet/IP Coupler Unit and NX Units), and information on hardware, setup, and functions to set up, control, and monitor NX Units.
NX-series CPU Unit Hardware User's Manual	W535	NX701-□□□□	Learning the basic specifications of the NX701 CPU Units, including introductory information, designing, installation, and maintenance. Mainly hardware information is provided.	An introduction to the entire NX701 system is provided along with the following information on the CPU Unit. • Features and system configuration • Introduction • Part names and functions • General specifications • Installation and wiring • Maintenance and inspection
NX-series NX502 CPU Unit Hardware User's Manual	W629	NX502-□□□□	Learning the basic specifications of the NX502 CPU Units, including introductory information, designing, installation, and maintenance. Mainly hardware information is provided.	An introduction to the entire NX502 system is provided along with the following information on the CPU Unit. • Features and system configuration • Introduction • Part names and functions • General specifications • Installation and wiring • Maintenance and inspection
NX-series NX102 CPU Unit Hardware User's Manual	W593	NX102-□□□□	Learning the basic specifications of the NX102 CPU Units, including introductory information, designing, installation, and maintenance. Mainly hardware information is provided.	An introduction to the entire NX102 system is provided along with the following information on the CPU Unit. • Features and system configuration • Introduction • Part names and functions • General specifications • Installation and wiring • Maintenance and inspection
NX-series NX1P2 CPU Unit Hardware User's Manual	W578	NX1P2-□□□□	Learning the basic specifications of the NX1P2 CPU Units, including introductory information, designing, installation, and maintenance. Mainly hardware information is provided.	An introduction to the entire NX1P2 system is provided along with the following information on the CPU Unit. • Features and system configuration • Introduction • Part names and functions • General specifications • Installation and wiring • Maintenance and inspection

Manual name	Cat. No.	Model numbers	Application	Description
NJ-series CPU Unit Hardware User's Manual	W500	NJ501-□□□□ NJ301-□□□□ NJ101-□□□□	Learning the basic specifications of the NJ-series CPU Units, including introductory information, designing, installation, and maintenance. Mainly hardware information is provided.	An introduction to the entire NJ-series system is provided along with the following information on the CPU Unit. • Features and system configuration • Introduction • Part names and functions • General specifications • Installation and wiring • Maintenance and inspection
NY-series IPC Machine Controller Industrial Panel PC Hardware User’s Manual	W557	NY532-□□□□	Learning the basic specifications of the NY-series Industrial Panel PCs, including introductory information, designing, installation, and maintenance. Mainly hardware information is provided.	An introduction to the entire NY-series system is provided along with the following information on the Industrial Panel PC. • Features and system configuration • Introduction • Part names and functions • General specifications • Installation and wiring • Maintenance and inspection
NY-series IPC Machine Controller Industrial Box PC Hardware User’s Manual	W556	NY512-□□□□	Learning the basic specifications of the NY-series Industrial Box PCs, including introductory information, designing, installation, and maintenance. Mainly hardware information is provided.	An introduction to the entire NY-series system is provided along with the following information on the Industrial Box PC. • Features and system configuration • Introduction • Part names and functions • General specifications • Installation and wiring • Maintenance and inspection
NJ/NX-series CPU Unit Software User’s Manual	W501	NX701-□□□□ NX502-□□□□ NX102-□□□□ NX1P2-□□□□ NJ501-□□□□ NJ301-□□□□ NJ101-□□□□	Learning how to program and set up an NJ/NX-series CPU Unit. Mainly software information is provided.	The following information is provided on a Controller built with an NJ/NX-series CPU Unit. • CPU Unit operation • CPU Unit features • Initial settings • Programming based on IEC 61131-3 language specifications
NY-series IPC Machine Controller Industrial Panel PC / Industrial Box PC Software User’s Manual	W558	NY532-□□□□ NY512-□□□□	Learning how to program and set up the Controller functions of an NY-series Industrial PC.	The following information is provided on the NY-series Controller functions. • Controller operation • Controller features • Controller settings • Programming based on IEC 61131-3 language specifications

Manual name	Cat. No.	Model numbers	Application	Description
NJ/NX-series CPU Unit Built-in EtherCAT® Port User's Manual	W505	NX701-□□□□ NX502-□□□□ NX102-□□□□ NX1P2-□□□□ NJ501-□□□□ NJ301-□□□□ NJ101-□□□□	Using the built-in EtherCAT port on an NJ/NX-series CPU Unit.	Information on the built-in EtherCAT port is provided. This manual provides an introduction and provides information on the configuration, features, and setup.
NY-series IPC Machine Controller Industrial Panel PC / Industrial Box PC Built-in EtherCAT® Port User's Manual	W562	NY532-□□□□ NY512-□□□□	Using the built-in EtherCAT port in an NY-series Industrial PC.	Information on the built-in EtherCAT port is provided. This manual provides an introduction and provides information on the configuration, features, and setup.
NJ/NX-series Instructions Reference Manual	W502	NX701-□□□□ NX502-□□□□ NX102-□□□□ NX1P2-□□□□ NJ501-□□□□ NJ301-□□□□ NJ101-□□□□	Learning detailed specifications on the basic instructions of an NJ/NX-series CPU Unit.	The instructions in the instruction set (IEC 61131-3 specifications) are described.
NY-series Instructions Reference Manual	W560	NY532-□□□□ NY512-□□□□	Learning detailed specifications on the basic instructions of an NY-series Industrial PC.	The instructions in the instruction set (IEC 61131-3 specifications) are described.

Terminology

Term	Abbre-viation	Description
CPU Rack	---	A Rack to which a CPU Unit or Communication Control Unit is mounted. For NX-series CPU Units to which NX Units can be connected, a CPU Rack has a CPU Unit with NX Units and an End Cover mounted to it. For NX-series Communication Control Units, a CPU Rack has a Communication Control Unit with NX Units and an End Cover mounted to it.
DC time	---	In a CPU Rack of a NX-series CPU Unit to which NX Units can be connected, time indicated by the clock shared between the CPU Unit and the NX Units. EtherCAT slaves that support distributed clock synchronization have a clock that is shared by all slaves in the network.The time that is based on this distributed clock is called the DC time. The same clock is shared by a CPU Unit, NX Units connected to the CPU Unit, and applicable EtherCAT slaves.
EtherCAT slave information	ESI	An XML file that contains setting information for an EtherCAT slave. Refer to *1-2-2 System Configuration of Slave Terminals* on page 1-6 for details.
I/O port	---	A logical interface that is used by the NJ/NX-series CPU Unit or NY-series Industrial PC to exchange data with an external device (slave or Unit).
I/O refreshing	---	Cyclic data exchange with external devices that is performed with predetermined memory addresses. Refer to *Section 5 I/O Refreshing* on page 5-1 for details.
NX bus	---	The NX-series internal bus.
NX message communications	---	Message communications to access NX objects.
ON-delay time	−	This function turns ON when the set output ON-delay time has passed after the comparison function ON command.
ON duration time	−	This function turns ON immediately after the comparison function ON command and retains ON status only for the set time. When the set time has passed, external output turns OFF.
PDO communications	---	An acronym for process data communications.
PWM Output Function	−	This function turns external output ON/OFF in accordance with the set frequency and duty ratio.
SDO communications	---	One type of EtherCAT communications in which service data objects (SDOs) are used to transmit information whenever required. Refer to the user's manual for the built-in EtherCAT port on the connected CPU Unit or Industrial PC for details.
Sync0	---	A signal that gives the interrupt timing based on the distributed clock (DC) in EtherCAT communications. The slaves execute controls according to this interrupt timing. Refer to the *NX-series EtherCAT Coupler Unit User's Manual (Cat. No. W519)* for details.
index	---	Address of an object within an application process.
object	---	An abstract representation of a particular component within a device, which consists of data, parameters, and methods.
Counter preset	−	This function changes the present counter value to the set value.
Counter Latch	−	This function stores the present counter value inside the Unit at the trigger input timing.

Term	Abbre-viation	Description
Counter reset	–	This function changes the present counter value to 0.
Counter Log Function	–	This function stores up to 4096 present counter values inside the Unit at the specified timing.
Gate control	–	This function switches count operation between Enable and Disable.
subindex	---	Sub-address of an object within the object dictionary.
Output Delay Function	–	This function sets the ON-delay time and ON duration time for external output.
Advance Time	–	This function detects target match a set amount of time earlier than its timing.
Slave Terminal	---	A building-block remote I/O terminal, which consists of a Communication Coupler Unit connected with NX Units.
Safety Network Controller	---	A building-block Safety Controller, which consists of a Communication Control Unit connected with Safety Control Units.
Range Comparison	–	This function sets the upper and lower limits and turns external output ON when lower limit ≤ counter value ≤ upper limit.
task period	---	The interval at which the primary periodic task or a periodic task is executed. Refer to the software user's manual for the connected CPU Unit or Industrial PC for details.
Communications Coupler Units	---	The generic name of an interface unit for remote I/O communications on a network between NX Units and a host network master.
Communication Control Unit	---	An interface unit for CIP Safety communications between a Safety CPU Unit and a CIP Safety on EtherNet/IP device on a network.
Pulse rate measurement	–	This is the number of pulses per the set time window. It can be used to calculate frequency and speed.
Pulse period measurement	–	This function measures the period between the rising edges or falling edges of the input pulse.
primary periodic task	---	The task with the highest priority. Refer to the software user's manual for the connected CPU Unit or Industrial PC for details.
process data	---	Collection of application objects designated to be transferred cyclically or acyclically for the purpose of measurement and control.
process data object	PDO	A structure that describes the mappings of parameters that have one or more process data entities.
process data communications	---	One type of EtherCAT communications in which process data objects (PDOs) are used to exchange information cyclically and in realtime. This is also called PDO communications.
Time stamping	–	When acquiring counter data, if it has changed from the previously acquired present counter value, this function acquires the time of day when the currently acquired present counter value changed. The obtained time data is called a time stamp.
Target Comparison	–	When adding or subtracting, this function detects when the present counter value matches the target value. Operation can be set when matching during addition or during subtraction.
Linear Counter	–	This counter counts within the range from the minimum to maximum values and stops counting operation when either is exceeded.
Ring Counter	–	This counter counts on a loop within the range from the minimum to maximum values.

Revision History

A manual revision code appears as a suffix to the catalog number on the front and back covers of the manual.

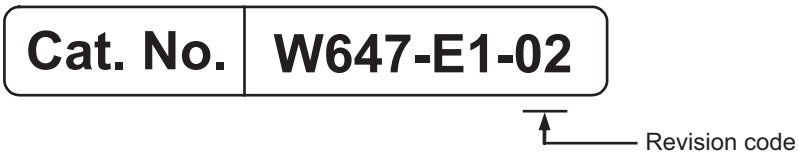

Revision code	Date	Revised content
01	December 2025	Original production
02	October 2026	• Added precautions for target comparison. • Corrected mistakes.

1

Features and System Configuration

This section describes NX system configuration and the types of High-speed Counter Units.

1-1 Features of High-speed Counter Units 1-2

1-2 System Configuration 1-5

1-2-1 System Configuration in the Case of a CPU Unit 1-5
1-2-2 System Configuration of Slave Terminals 1-6
1-2-3 Application System Configuration Example 1-9

1-3 Model 1-10

1-3-1 Model Notation 1-10
1-3-2 Models 1-11

1-4 List of Functions 1-12

1-4-1 Functions in 2ch Mode 1-12
1-4-2 Functions in 6ch Mode 1-15

1-5 Support Software 1-17

1-1 Features of High-speed Counter Units

High-speed Counter Units counts the input pulses. It also compares the counter value and target value to turn external output ON/OFF at high speed.

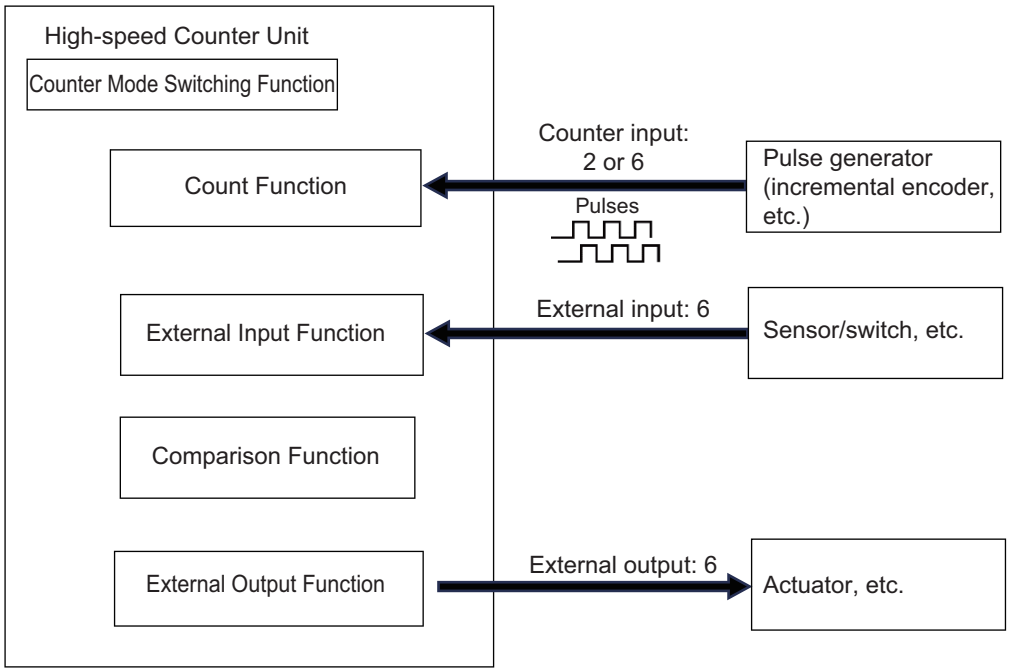

The NX-series High-speed Counter Units has the following features.

Selectable from Two Counter Modes

The High-speed Counter Unit enables selection from the following two modes.

- 2ch mode: 2-channel up-down counter mode
- 6ch mode: 6-channel single-phase counter mode

2ch mode supports functions such as Advance Time, Counter Log, and PWM Output, enabling complex and high-precision control. 6ch mode enables the use of 6-channel counter input with one Unit, contributing to reduced costs.

Equipped with Comparison Function with Detection at 1 μs or Less

When comparing with the present counter value as target value, comparison detection is possible within 1 μs or less from comparison. This enables high-speed control without depending on the controller task period.
(in 2ch mode only)

Equipped with Advance Time Function Taking into Account Delay Time

With the comparison function it is possible to compare the present counter value and target value and turn external output ON/OFF at the match timing. However, delayed operation on the part of the external device connected to the output will cause the actual external device operation to be later than the comparison match timing.
The High-speed Counter Unit has an Advance Time Function which outputs at an earlier timing according to the set time. This means that external device operation will start at the same time as the present counter value and target value match.
(in 2ch mode only)

Equipped with PWM Output Function Linkable with Target Comparison

The High-speed Counter Unit can output PWM waveforms with settable frequency and duty from external output0.
Setting the PWM waveform can be done with the comparison function match timing. This enables the output amount to be adjusted for each position in accordance with the present counter value.
(in 2ch mode only)

Counter Log Function Equipped

The High-speed Counter Unit is equipped with a Counter Log Function which stores up to 4096 counter values as count data inside the Unit. The Counter Log Function Mode can be selected from the following 2 types. (in 2ch mode only)

- Latch Log Mode
  In Latch Log Mode, counter values latched by an external input trigger are saved. Counter values can be acquired even when the latch interval is shorter than the controller task period.
- Cyclic Log Mode
  In Cyclic Log Mode, counter values are saved at a set time cycle. The cycle setting range is 1 to 65535 μs. Operating status such as speed fluctuations can be checked by checking the saved counter values.

Can be Connected to a CPU Unit or Communications Coupler Unit

NX Units NX-series High-speed Counter Units can be connected to the following Units.

- NX-series CPU Unit*1
- NX-series Communications Coupler Unit

When a CPU Unit and a Communications Coupler Unit are used together, you can unify the methods for installing, wiring, and setting up NX Units, and eventually reduce design costs.

Example:

NX-series NX102 CPU Unit

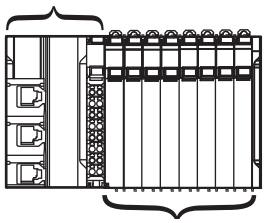

NX Units: NX-series High-speed Counter Units

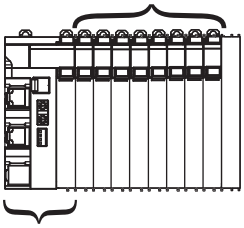

NX-series EtherCAT Coupler Unit

*1. Refer to the user's manual for your CPU Unit or Communications Coupler Unit for details on whether NX Units can be connected to the CPU Unit or Communications Coupler Unit.

Synchronous I/O with Refresh Cycle of the NX Bus

When the NX-series CPU Unit or EtherCAT Coupler Unit is used together with NX Units that support synchronous I/O refreshing, the I/O control of multiple NX Units can be synchronized at the time to synchronize with the refresh cycle of the NX bus.
This provides an accurate I/O control because it suppresses jitter in the I/O timing of multiple NX Units.

Simple I/O Wiring with a Screwless Clamping Terminal Block

The terminal block is a screwless clamping terminal block.
You can connect the wires simply by pushing the ferrules into the terminals. The amount of wiring work is reduced without requiring the use of screws.

1-2 System Configuration

NX Units NX-series High-speed Counter Units can be connected to the following Units.

- NX-series CPU Unit
- NX-series Communications Coupler Unit

The following explains the system configuration for each NX Unit connection destination.

The system configuration for each NX Unit connection destination is provided, and followed by an example of an application system configuration where an NX-series High-speed Counter Unit is used.

1-2-1 System Configuration in the Case of a CPU Unit

The following figure shows a system configuration when a group of NX Units is used with an NX-series NX102 CPU Unit. Refer to the user's manual for the connected CPU Unit for information on how to configure the system when a CPU Unit other than the NX102 CPU Unit is used.
You can connect the EtherCAT Slave Terminal to the built-in EtherCAT port on the CPU Unit.
Refer to *1-2-2 System Configuration of Slave Terminals* on page 1-6 for details on the system configuration of a Slave Terminal.

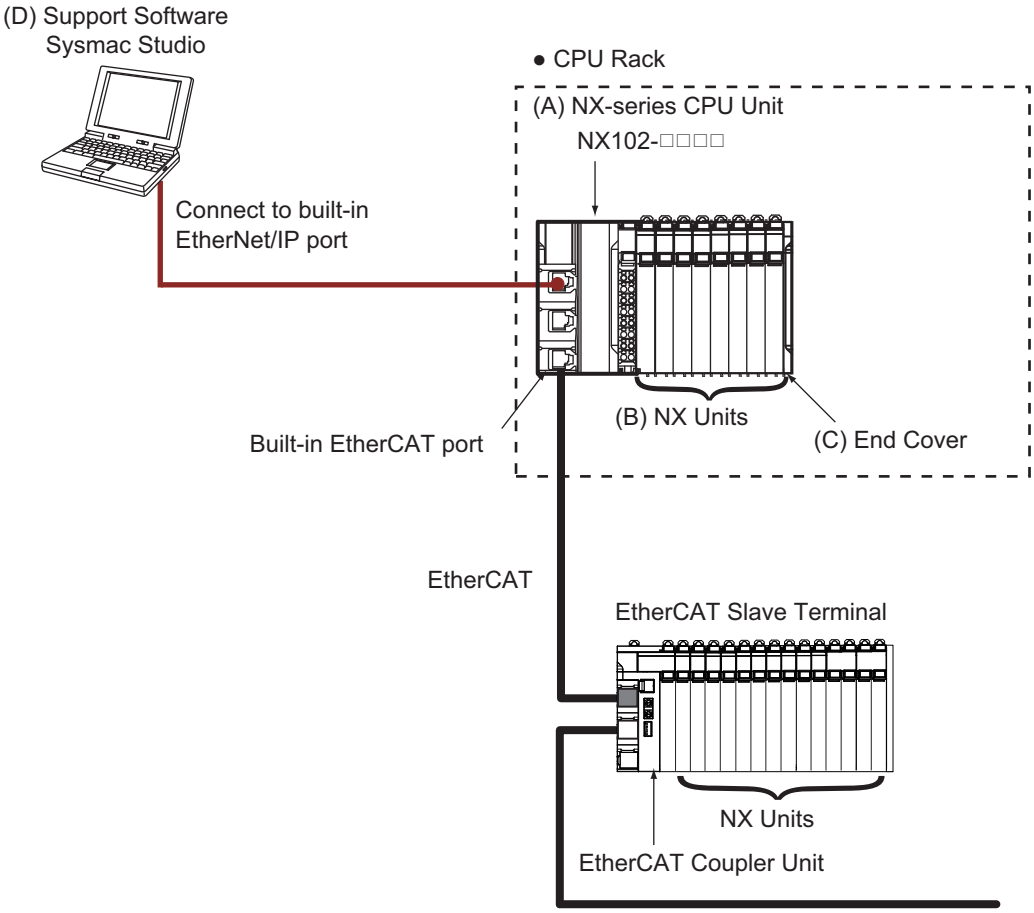

Letter	Item	Description
(A)	NX-series CPU Unit	The Unit that serves as the center of control for a Machine Automation Controller. It executes tasks, refreshes I/O for other Units and slaves, etc. NX Units can be connected to an NX102 CPU Unit.
(B)	NX Units	The NX Units perform I/O processing with connected external devices. The NX Units exchange data with the CPU Unit through I/O refreshing. A maximum of 32 NX Units can be connected to an NX102 CPU Unit.
(C)	End Cover	The End Cover is attached to the end of the CPU Rack.
(D)	Support Software (Sysmac Studio)	A computer software application for setting, programming, debugging, and troubleshooting NJ/NX/NY-series Controllers. For an NX102 CPU Unit, this application performs setting operation by making a connection to a built-in EtherNet/IP port.

1-2-2 System Configuration of Slave Terminals

A building-block remote I/O slave provided with a group of NX Units connected to a Communications Coupler Unit is generically called a Slave Terminal.
The NX Units can be flexibly combined with a Communications Coupler Unit to achieve the optimum remote I/O slave for the application with less wiring, less work, and less space.
The following figure shows an example of the system configuration when an EtherCAT Coupler Unit is used as a Communications Coupler Unit.
Refer to the user's manual for the connected Communications Coupler Unit for details on how to configure the system when any other type of Communications Coupler Unit is used.

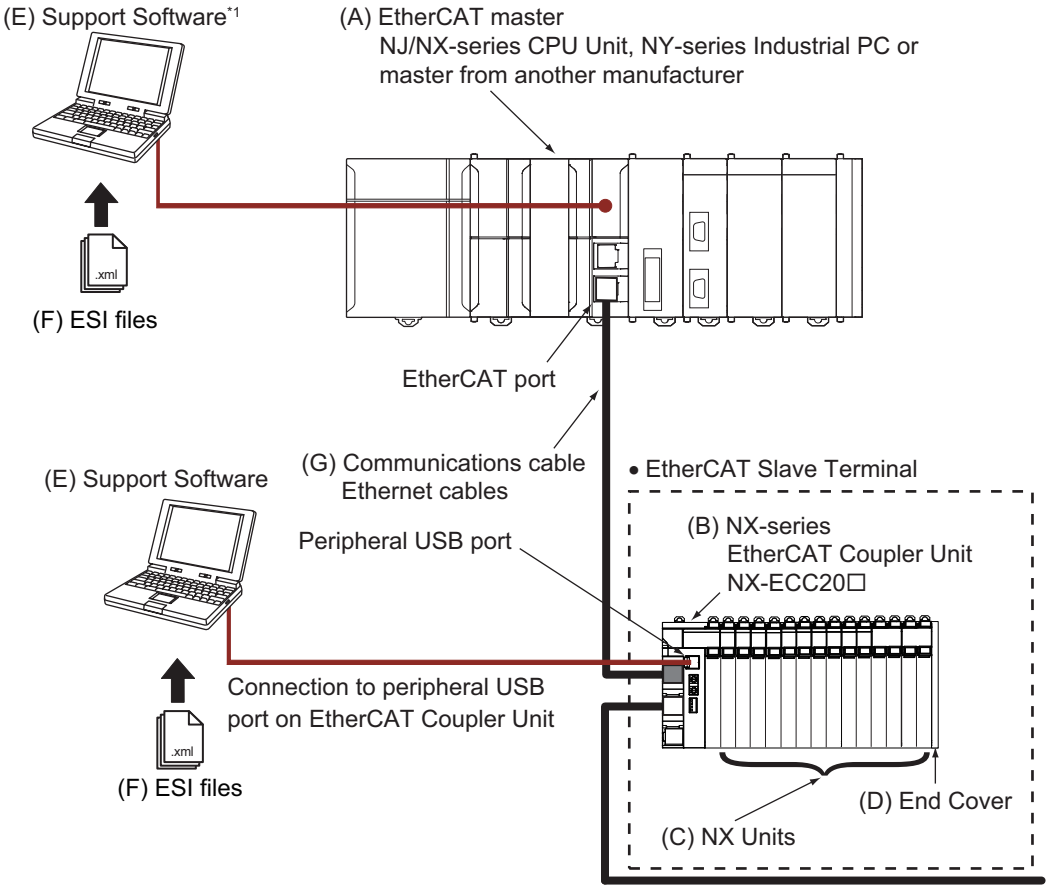

*1. The connection method for the Support Software depends on the model of the CPU Unit or Industrial PC.

Letter	Item	Description
(A)	EtherCAT master *1	The EtherCAT master manages the network, monitors the status of slaves, and exchanges I/O data with slaves.
(B)	EtherCAT Coupler Unit	The EtherCAT Coupler Unit serves as an interface for process data communications on the EtherCAT network between the NX Units and the EtherCAT master. The I/O data for the NX Units is accumulated in the EtherCAT Coupler Unit and then all of the data is exchanged with the EtherCAT master at the same time. The EtherCAT Coupler Unit can also perform message communications (SDO communications) with the EtherCAT master.
(C)	NX Units *2	The NX Units perform I/O processing with connected external devices. The NX Units perform process data communications with the EtherCAT master through the EtherCAT Coupler Unit.
(D)	End Cover	The End Cover is attached to the end of the Slave Terminal.
(E)	Support Software *3	The Support Software runs on a personal computer and it is used to configure the EtherCAT network and EtherCAT Slave Terminal, and to program, monitor, and troubleshoot the Controllers.

Letter	Item	Description
(F)	ESI (EtherCAT Slave Information) files	The ESI files contain information that is unique to the EtherCAT Slave Terminal in XML format. You can load an ESI file into the Support Software to easily allocate Slave Terminal process data and make other settings. The ESI files for OMRON EtherCAT slaves are installed in the Support Software. You can obtain the ESI files for the latest models through the Support Software's automatic update function.
(G)	Communications cable	Use a double-shielded cable with aluminum tape and braiding of Ethernet category 5 (100Base-TX) or higher, and use straight wiring.

*1. An EtherCAT Slave Terminal cannot be connected to any of the OMRON CJ1W-NC□81/□82 Position Control Units even though they can operate as EtherCAT masters.
*2. For whether an NX Unit can be connected to the Communications Coupler Unit, refer to the version information in the user's manual for the NX Unit.
*3. The term Support Software indicates software that is provided by OMRON. If you connect to a master from another company, use the software tool corresponding to that master.

Refer to *1-5 Support Software* on page 1-17 for information on Support Software.

1-2-3 Application System Configuration Example

The High-speed Counter Unit can be used in various applications. This section describes an example with a general-purpose filler machine.

The example below is with the application of filling containers with a specified amount of liquid. When the sensor connected to external input detects the container, the counter is reset. Further, when the valve is opened by external output, the liquid passes through a flowmeter to fill the container.
The flowmeter outputs a pulse count proportional to the liquid flow rate. By counting the number of output pulses, the liquid filling amount can be measured. When the comparison function is used to detect that the container is full of the determined amount of liquid, the valve is closed by external output.

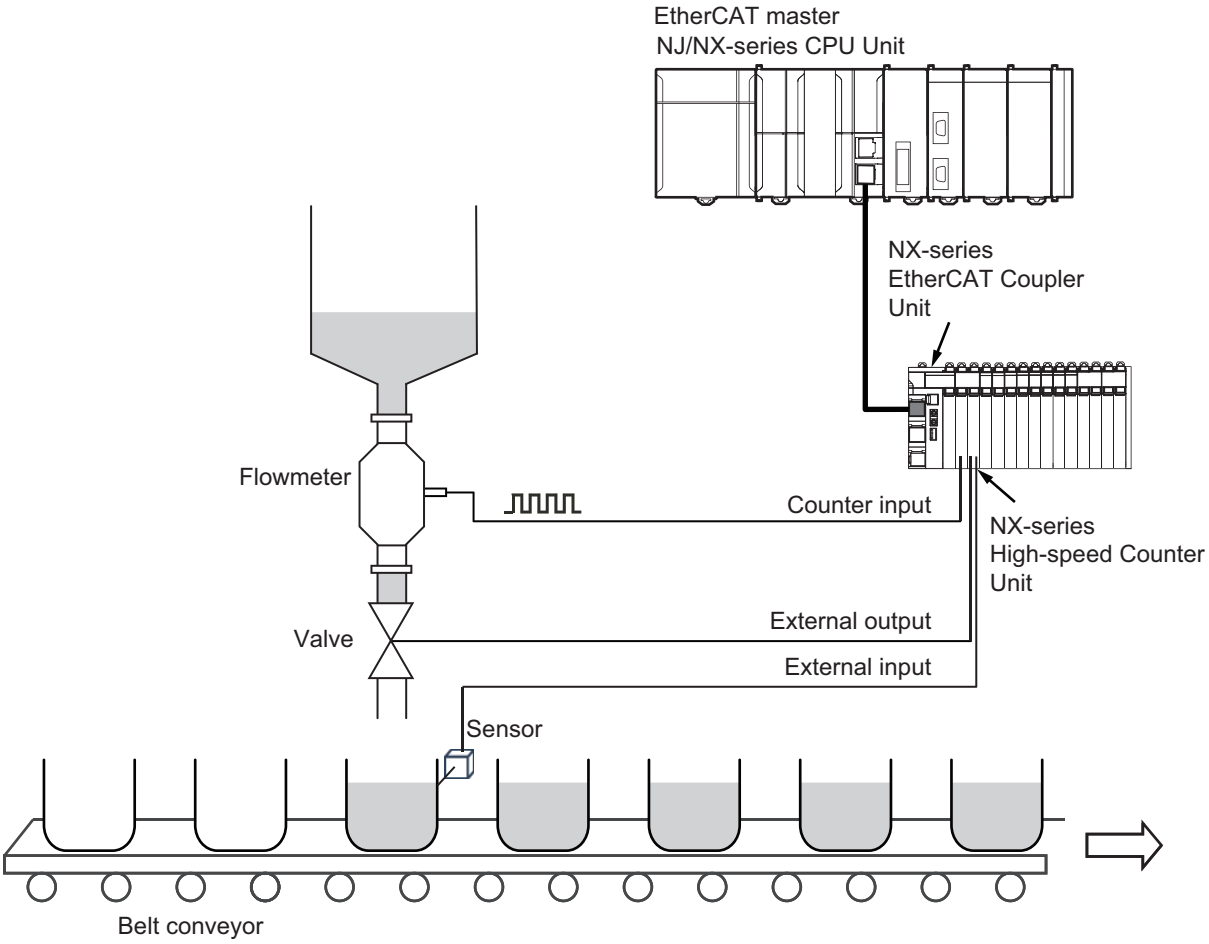

1-3 Model

This section describes the model notation and model list of the High-speed Counter Units.

1-3-1 Model Notation

The model numbers of the High-speed Counter Units are assigned based on the following rules.

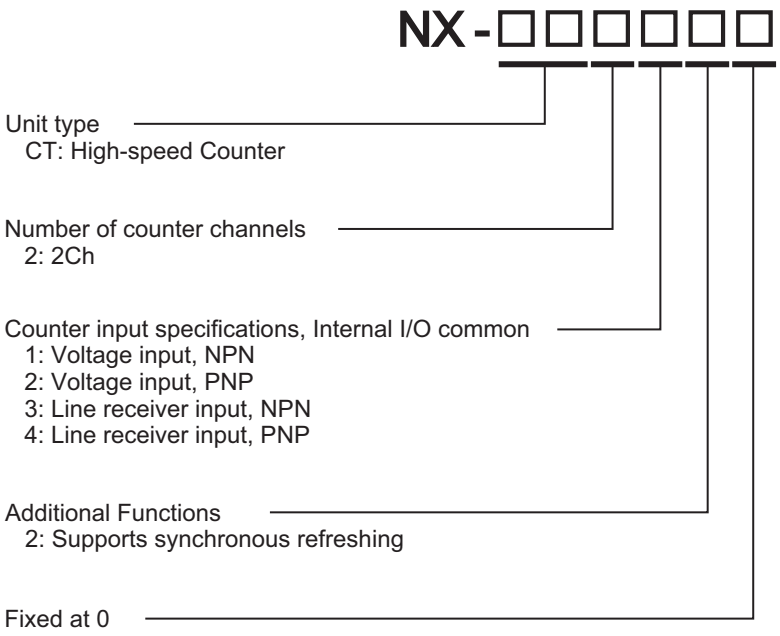

1-3-2 Models

This is a list of the High-speed Counter Unit models.

Refer to *A-1 Data Sheet* on page A-2 for details of the specifications of each Unit.

Model	Counter channel number*1	Number of external inputs	Number of external outputs	Maximum response frequency*2	I/O refreshing method	Remarks
NX-CT2120	2 (NPN)	6 (NPN)	6 (NPN)	1 MHz	• Free-Run refreshing • Synchronous I/O refreshing • Task period prioritized refreshing	5 V/24 V voltage input
NX-CT2220	2 (PNP)	6 (PNP)	6 (PNP)			
NX-CT2320	2	6 (NPN)	6 (NPN)	4MHz		Line receiver input
NX-CT2420	2	6 (PNP)	6 (PNP)			

*1. When set to 6ch mode, the counter channel number is 6 channels.
*2. When set to 6ch mode, the maximum frequency is 100 kHz.

Additional Information

The High-speed Counter Unit cannot be used as an MC Function Module (encoder axis). For an axis in the MC Function Module, use the NX-series Position Interface Unit (NX-EC0□□□).

1-4 List of Functions

The functions available for the High-speed Counter Unit differ between 2ch and 6ch mode.
This section describes the functions available in each mode.

1-4-1 Functions in 2ch Mode

The functions available in 2ch mode are as below.

Function name	Meaning	Reference
Counter Noise Filter	This function eliminates counter signal noise. It is used to prevent error readings due to noise. A noise filter can be set for each channel.	*7-3-1 Counter Noise Filter* on page 7-15
Pulse Input Method	For each channel, the pulse input method can be selected from phase differential pulse (multiplication ×1/2/4), pulse + direction, or up and down pulses.	*7-3-2 Pulse Input Method* on page 7-19
Count Direction	The count direction can be set for each channel.	*7-3-3 Count Direction* on page 7-23
Counter Type	For each channel, the counter type can be selected from ring counter and linear counter.	*7-3-4 Counter Types* on page 7-26
Gate control (Counter Enable)	Counter enabling can be controlled for each channel. Gate control can be executed with counter operation commands and external input.	*7-3-5 Gate control* on page 7-28
Counter reset	Counter values can be reset for each channel. Counter reset can be executed with counter operation commands, external input, Z-phase signal, and target comparison. Select from “Counter reset executed only once after counter reset enabled” and “Counter reset executed every time.” Counter operation commands can be used to select counter reset enable/disable with external input, Z-phase, or target comparison.	*7-3-6 Counter reset* on page 7-30
Counter preset	Counter values can be preset to set values for each channel. Counter preset can be executed with counter operation commands and external input. Counter operation commands can be used to select counter preset enable/disable with external input, or target comparison.	*7-3-7 Counter Preset* on page 7-35
Counter Latch	For each channel, counter values can be saved in counter latch data with an external input trigger. Up to two latches can be used simultaneously for each channel. Counter operation commands can be used to select counter latch enable/disable.	*7-3-8 Counter Latch* on page 7-40
Counter Log Function	For Ch1, 4096 counter log data items can be saved within the Unit. The Counter Log Function is not available for Ch2. Counter log data uses I/O data to read out up to 16 items at a time. Select from Latch Log Mode and Cyclic Log Mode.	*7-3-9 Counter Log Function* on page 7-44

Function name	Meaning	Reference
Pulse Rate Measurement Function	Measures the pulse rate of input pulses for each channel. The measured pulse rate can then be used to calculate the frequency or rotation rate from a user program.	*7-3-10 Pulse Rate Measurement Function* on page 7-49
Pulse Period Measurement Function	This function measures the period between the rising edges or falling edges of the A-phase input pulse.	*7-3-11 Pulse Period Measurement Function* on page 7-50
Time stamping	When changed from the present counter value previously obtained, the acquired counter value time is saved.	*7-3-12 Time Stamping* on page 7-54
External Input Noise Filter	This function eliminates the chattering or the noises from input signals. It is used to prevent error readings due to noise. Six external inputs are common for noise filter setting.	*7-4-1 External Input Noise Filter* on page 7-55
External Input Status	External input0 to 5 ON/OFF status can be confirmed.	*7-4-2 External Input Status* on page 7-56
External Input Function Selection	Each Counter Gate Control, Counter Reset, Counter Preset, Counter Latch, and Counter Log Enable/Disable function can be allocated to the 6 external inputs. Multiple functions can be allocated to 1 external input.	*7-4-3 External Input Function Selection* on page 7-57
Comparison Function Mode Switching	Select from Target Comparison Mode and Range Comparison Mode.	*7-5-1 Comparison Function Mode Switching* on page 7-59
Target comparison	Up to 32 target comparison data items can be set for each channel. Target comparison data is composed of target value, advance time, addition match output pattern, and subtraction match output pattern. Target comparison data0 to 31 enable/disable can be set for each channel. With consideration for delays in external devices such as actuators, the time set for each target comparison alone can be output earlier. (Advance Time Function) There are 6 external outputs, each of which can output target comparison for an arbitrary channel.	*7-5-2 Target Comparison* on page 7-61
Range comparison	Up to 32 range comparison data items can be set for each channel. Range comparison data is composed of upper limit, lower limit, and output pattern. Range comparison data0 to 31 enable/disable can be set for each channel. Comparison hysteresis can be set. There are 6 external outputs, each of which can be allocated to output the range comparison range for an arbitrary channel. For external output inter-channel logic setting, when allocating the Ch1 and Ch2 counter target comparison output to the same external output, select whether to output the two channels' results with OR or AND.	*7-5-3 2ch mode Range Comparison* on page 7-75
Output Delay Function	For external output0 and external output1, with external output ON/OFF via comparison functions, ON-delay and ON duration are possible.	*7-6-1 Output Delay Function* on page 7-90

Function name	Meaning	Reference
PWM Output Function	PWM output is possible with external output0. With PWM output, in accordance with the set PWM frequency and PWM duty, a PWM pulse is output. PWM output execute/setting change/stop are possible with target comparison and PWM operation commands.	*7-6-2 PWM Output Function* on page 7-93
External Output Force ON/OFF Function	With the force ON/OFF operation command, forcible external output0 to 5 ON/OFF is possible.	*7-6-3 External Output Force ON/OFF Function* on page 7-96
External Output Status	External output0 to 5 ON/OFF status can be confirmed.	*7-6-4 External Output Status* on page 7-97
Load Rejection External Output Setting	This function performs the preset output operation when the Unit cannot receive output data due to the following causes: • When the Unit is connected to a CPU Unit: NX bus error, CPU Unit watchdog timer error, etc. • When the Unit is connected to a Communications Coupler Unit: Host error on the Communications Coupler Unit, NX bus error, etc.	*7-6-5 Load Rejection External Output Setting* on page 7-98

1-4-2 Functions in 6ch Mode

The functions available in 6ch mode are as below.

Function name	Meaning	Reference
Counter Noise Filter	This function eliminates counter signal noise. It is used to prevent error readings due to noise. Noise filter setting is the same for Ch1 to 6.	*7-3-1 Counter Noise Filter* on page 7-15
Pulse Input Method	The pulse input method is single-phase. With addition only, direction change is not possible.	*7-3-2 Pulse Input Method* on page 7-19
Counter Type	For each channel, the counter type can be selected from ring counter and linear counter.	*7-3-4 Counter Types* on page 7-26
Gate control (Counter Enable)	Counter enabling can be controlled for each channel. Gate control can be executed with counter operation command.	*7-3-5 Gate control* on page 7-28
Counter reset	Counter values can be reset for each channel. Counter reset can be executed with counter operation commands and external input. Select from “Counter reset executed only once after counter reset enabled” and “Counter reset executed every time.” Counter operation commands can be used to select counter reset enable/disable with external input.	*7-3-6 Counter reset* on page 7-30
Counter preset	Counter values can be preset to set values for each channel. Counter preset can be executed with counter operation commands and external input. Counter operation commands can be used to select counter preset enable/disable with external input.	*7-3-7 Counter Preset* on page 7-35
Counter Latch	For each channel, counter values can be saved in counter latch data with an external input trigger. 1 latch can be used for each channel. Counter operation commands can be used to select counter latch enable/disable.	*7-3-8 Counter Latch* on page 7-40
Pulse Rate Measurement Function	Measures the pulse rate of input pulses for each channel. The measured pulse rate can then be used to calculate the frequency or rotation rate from a user program.	*7-3-10 Pulse Rate Measurement Function* on page 7-49
External Input Noise Filter	This function eliminates the chattering or the noises from input signals. It is used to prevent error readings due to noise. Six external inputs are common for noise filter setting.	*7-4-1 External Input Noise Filter* on page 7-55
External Input Status	External input0 to 5 ON/OFF status can be confirmed.	*7-4-2 External Input Status* on page 7-56
External Input Function Selection	The corresponding Counter Reset, Counter Preset, and Counter Latch functions can be allocated to the 6 external inputs.	*7-4-3 External Input Function Selection* on page 7-57
Range comparison	1 range comparison data item can be set for each channel. Range comparison data is composed of upper and lower limit data. Comparison results can be output to the external output stipulated for each channel. Range comparison data enable/disable can be set.	*7-5-4 6ch mode Range Comparison* on page 7-86

Function name	Meaning	Reference
External Output Force ON/OFF Function	With the force ON/OFF operation command, forcible external output0 to 5 ON/OFF is possible.	*7-6-3 External Output Force ON/OFF Function* on page 7-96
External Output Status	External output0 to 5 ON/OFF status can be confirmed.	*7-6-4 External Output Status* on page 7-97
Load Rejection External Output Setting	This function performs the preset output operation when the Unit cannot receive output data due to the following causes: • When the Unit is connected to a CPU Unit: NX bus error, CPU Unit watchdog timer error, etc. • When the Unit is connected to a Communications Coupler Unit: Host error on the Communications Coupler Unit, NX bus error, etc.	*7-6-5 Load Rejection External Output Setting* on page 7-98

1-5 Support Software

The Support Software that is used depends on the system configuration.

- **Support Software for a System Configured with a CPU Unit**
  If your system is configured by connecting an NX Unit to a CPU Unit, the Sysmac Studio is used as the Support Software.

- **Support Software for a System Configured with a Slave Terminal**
  If your system is configured by connecting an NX Unit to a Communications Coupler Unit, refer to the user's manual for the Communications Coupler Unit for information on the Support Software.

Refer to *A-6 Version Information with CPU Units* on page A-86 or *A-7 Version Information with Communications Coupler Units* on page A-87 for information on the Support Software versions.

2

Specifications and Application Procedures

This section provides the specifications of the High-speed Counter Units and describes how to use the Position Interface Units.

2-1 Specifications 2-2
2-1-1 General Specifications 2-2
2-1-2 Individual Specifications 2-2
2-2 Operating Procedures 2-3

2-1 Specifications

2-1-1 General Specifications

This section provides the general specifications of the High-speed Counter Units.

Item		Specification
Enclosure		Mounted in a panel
Grounding methods		Ground to 100 Ω or less
Operating environment	**Ambient operating temperature**	0 to 55°C
	Ambient operating humidity	10 to 95% RH (with no icing or condensation)
	Atmosphere	Must be free from corrosive gases.
	Ambient storage temperature	-25 to 70°C (with no icing or condensation)
	Altitude	2,000 m max.
	Pollution degree	Pollution degree 2 or less: Conforms to JIS B 3502 and IEC 61131-2.
	Noise immunity	Conforms to IEC 61000-4-4, 2 kV (power supply line)
	Overvoltage category	Category II: Conforms to JIS B 3502 and IEC 61131-2.
	EMC immunity level	Zone B
	Vibration resistance	Conforms to IEC 60068-2-6. 5 to 8.4 Hz with amplitude of 3.5 mm, 8.4 to 150 Hz, acceleration of 9.8 m/s^2 100 min each in X, Y, and Z directions (10 sweeps of 10 min each = 100 min total)
	Shock resistance	Conforms to IEC 60068-2-27, 147 m/s^2, 3 times each in X, Y, and Z directions
Applicable standards		cULus: Listed (UL61010-2-201), ANSI/ISA 12.12.01, EU: EN 61131-2, RCM, and KC (KC Registration)

Note Refer to the OMRON website (www.ia.omron.com) or ask your OMRON representative for the most recent applicable standards for each model.

2-1-2 Individual Specifications

Refer to *A-1 Data Sheet* on page A-2 for the individual specifications of the High-speed Counter Units.

2-2 Operating Procedures

This section describes the operating procedures for the High-speed Counter Units.
Refer to the user's manual for the connected CPU Unit or Communications Coupler Unit for details on the operating procedures and how to download the settings of the CPU Unit or Slave Terminal to which the High-speed Analog Input Unit is connected.

Step	Item	Meaning	Sections
1	Counter Mode determination	Determine whether to use the counter in 2ch mode or 6ch mode.	*7-1-1 Counter Mode Switching Function* on page 7-4
2	Used function determination	Determine which of the functions installed in the High-speed Counter Unit to use.	*Section 7 Functions* on page 7-1
3	Unit Registration and I/O Allocation Settings	Create a project in the Sysmac Studio. Register the High-speed Counter Unit offline. Set the I/O allocations in accordance with the Counter Mode and used function(s).	• *Sysmac Studio Version 1 Operation Manual (Cat. No. W504)* • *Allocatable I/O Data* on page 6-2
4	Initial Unit Setting	Set the Unit initial settings in accordance with the Counter Mode and used function(s). Set the initial settings with the Unit operation settings.	• *6-2 List of Settings* on page 6-38 • *Section 7 Functions* on page 7-1
5	Creating the User Program	Create a user program with Sysmac Studio.	Software User's Manual for the connected CPU Unit or industrial PC
6	Installing Units	Install the High-speed Counter Unit to the CPU Unit or Communications Coupler Unit.	*Section 4 Installation and Wiring* on page 4-1
7	Wiring the Unit	Wire the High-speed Counter Unit.	
8	Downloading Unit Settings and User Program	Turn ON the CPU Unit or Communications Coupler Unit power, and download the Unit settings created in Sysmac Studio to the High-speed Counter Unit. Also download the user program to the NJ/NX-series CPU Unit or NY-series industrial PC.	• Software user's manual for the connected CPU Unit or Industrial PC • User's manual for the connected Communications Coupler Unit
9	Checking Operation	Execute the following and check the operation of the High-speed Counter Unit. • Use Sysmac Studio to check the wiring by reading the input data and writing output data for the High-speed Counter Unit. • Check that the Unit settings and user program are running correctly.	*4-3-3 Checking the Wiring* on page 4-19

3

Part Names and Functions

This section describes the names and functions of the parts of the High-speed Counter Units.

3-1 Part Names **3-2**

3-2 Indicators **3-3**

3-2-1 TS LED 3-4
3-2-2 Counter Operation LED 3-5
3-2-3 Counter Input LED 3-6
3-2-4 External I/O LED 3-7

3-3 Terminal Blocks **3-8**

3-1 Part Names

This section describes the names and functions of the parts of the High-speed Counter Units.

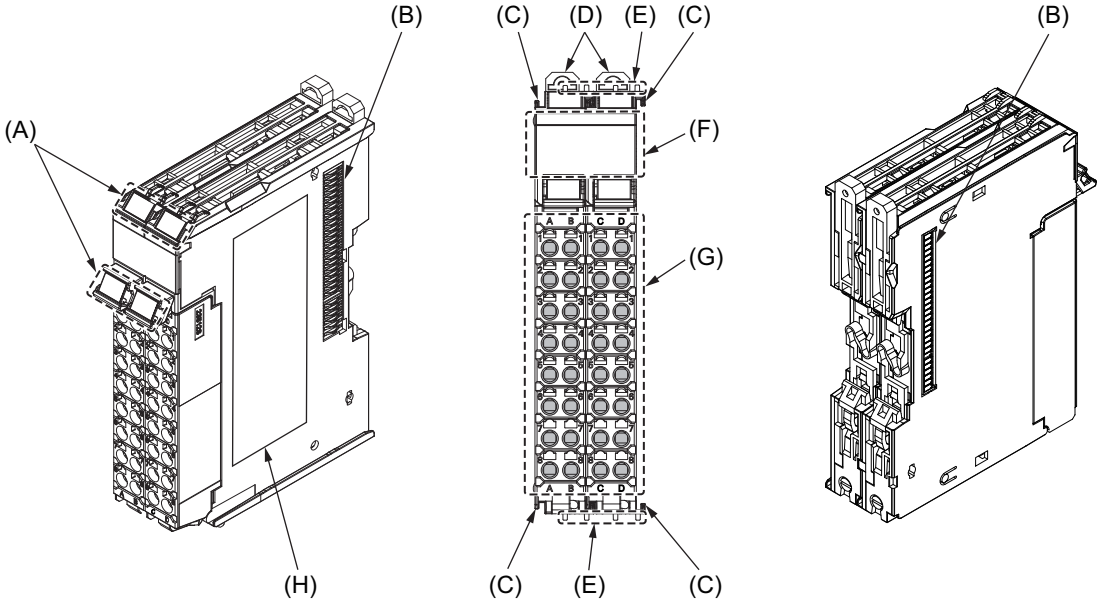

Letter	Name	Description
(A)	Marker attachment locations	The locations where markers are attached. The markers made by OMRON are installed for the factory setting. Commercially available markers can also be installed.
(B)	NX bus connector	This connector is used to connect each Unit.
(C)	Unit hookup guides	These guides are used to connect two Units.
(D)	DIN Track mounting hooks	These hooks are used to mount the NX Unit to a DIN Track.
(E)	Protrusions for removing the Unit	The protrusions to hold when removing the Unit.
(F)	Indicators	The indicators show the current operating status of the Unit.
(G)	Terminal block	The terminal block is used to connect external devices.
(H)	Unit specifications	The specifications of the Unit are given.

Refer to *Installation* in the hardware user's manual for the connected CPU Unit or the user's manual for the Communications Coupler Unit for details on attaching markers.
Refer to *3-2 Indicators* on page 3-3 for details on the indicators.
Refer to *3-3 Terminal Blocks* on page 3-8 for details on the terminal blocks.

3-2 Indicators

The High-speed Counter Units are equipped with indicators to show the current operating status of the Unit.
This section describes the names and functions of the indicator parts.

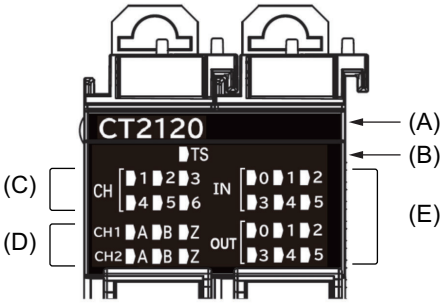

24 mm width

Letter	Name	Function
(A)	Model number indication	Gives the model number of the unit, without the prefix. Example: CT2120 in the case of NX-CT2120. The text is white.
(B)	TS LED	The TS indicator shows the current status of the high-speed counter unit and the status of communications with the CPU unit or communications coupler unit.
(C)	Counter Operation LED	Displays the High-speed Counter Unit counter enabled status for each channel.
(D)	Counter Input LED	This shows the High-speed Counter Unit counter input status.
(E)	External I/O LED	This shows the High-speed Counter Unit external input/output status.

3-2-1 TS LED

This indicator shows the current operating status of the High-speed Counter Unit and its communications status with the CPU Unit or the Communications Coupler Unit.

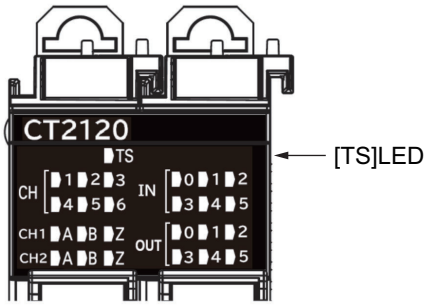

Color	Status		Description
Green		Lit	The Unit is operating normally. The Unit is ready for I/O refreshing.
		Flashing (at 2-s intervals)	• Initializing • Restarting is in progress for the Unit. • Downloading
Red		Lit	A hardware failure, WDT error, or other fatal error that is common to all I/O Units occurred.
		Flashing (at 1-s intervals)	A communications error or other NX bus-related error that is common to all I/O Units occurred.
---		Not lit	• No Unit power supply • Restarting is in progress for the Unit. • Waiting for initialization to start

3-2-2 Counter Operation LED

Displays whether counting is enabled on the counter.
Counter Enable can be switched with gate control. Refer to *7-3-5 Gate control* on page 7-28 for details of gate control.

Counter Operation LED

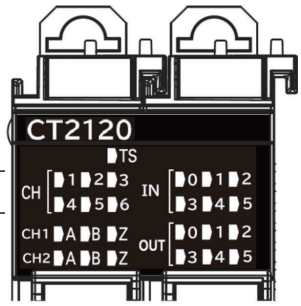

Indicator		Name	Color	Status	Meaning
CH	1	Counter Ch1 Operation Display	Green	Lit	Counter Ch1 count enabled
				Not lit	Counter Ch1 count disabled
	2	Counter Ch2 Operation Display	Green	Lit	Counter Ch2 count enabled
				Not lit	Counter Ch2 count disabled
	3	Counter Ch3 Operation Display*1	Green	Lit	Counter Ch3 count enabled
				Not lit	Counter Ch3 count disabled
	4	Counter Ch4 Operation Display*1	Green	Lit	Counter Ch4 count enabled
				Not lit	Counter Ch4 count disabled
	5	Counter Ch5 Operation Display*1	Green	Lit	Counter Ch5 count enabled
				Not lit	Counter Ch5 count disabled
	6	Counter Ch6 Operation Display*1	Green	Lit	Counter Ch6 count enabled
				Not lit	Counter Ch6 count disabled

*1. In 2ch mode, because only Ch1 and Ch2 are used, the LEDs for 3 to 6 will not light.

3-2-3 Counter Input LED

Displays counter input terminal pulse input status.
Content is different in 2ch and 6ch mode. Refer to the following table for the content of each mode.

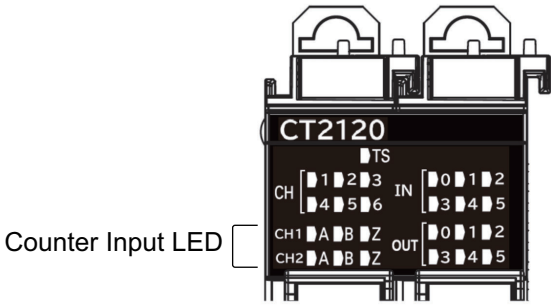

Display*1		Name	Color	Status	Meaning	
					2ch mode	6ch mode
CH1	A	Counter Ch1 A-phase status	Yellow	Lit	Ch1 A-phase input	Ch1 A-phase input
				Not lit	No Ch1 A-phase input	No Ch1 A-phase input
	B	Counter Ch1 B-phase status	Yellow	Lit	Ch1 B-phase input	Ch2 A-phase input
				Not lit	No Ch1 B-phase input	No Ch2 A-phase input
	Z	Counter Ch1 Z-phase status	Yellow	Lit	Ch1 Z-phase input	Ch3 A-phase input
				Not lit	No Ch1 Z-phase input	No Ch3 A-phase input
CH2	A	Counter Ch2 A-phase status	Yellow	Lit	Ch2 A-phase input	Ch4 A-phase input
				Not lit	No Ch2 A-phase input	No Ch4 A-phase input
	B	Counter Ch2 B-phase status	Yellow	Lit	Ch2 B-phase input	Ch5 A-phase input
				Not lit	No Ch2 B-phase input	No Ch5 A-phase input
	Z	Counter Ch2 Z-phase status	Yellow	Lit	Ch2 Z-phase input	Ch6 A-phase input
				Not lit	No Ch2 Z-phase input	No Ch6 A-phase input

*1. The Unit main unit indicators reflect 2ch mode.

3-2-4 External I/O LED

Displays the External Input and External Output signal status for each terminal.

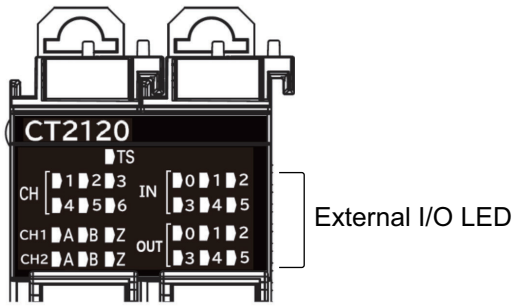

Indicator		Name	Color	Status	Meaning
IN	0 to 5	External Input0 to 5 status	Yellow	Lit	External Input0 to 5 ON.
				Not lit	External Input0 to 5 OFF.
OUT	0 to 5	External Output0 to 5 status	Yellow	Lit	External Output0 to 5 ON.
				Not lit	External Output0 to 5 OFF.

3-3 Terminal Blocks

Screwless clamping terminal blocks are used for the High-speed Analog Input Units for easy wiring and removal.
The compatible terminal blocks for the High-speed Analog Input Units are NX-TBA162 and NX-TBB162.
The NX-TBA162 terminal block is connected to the left side of the Unit and the NX-TBA162 terminal block is connected to the right side of the Unit.

24 mm width
16-terminal type x2

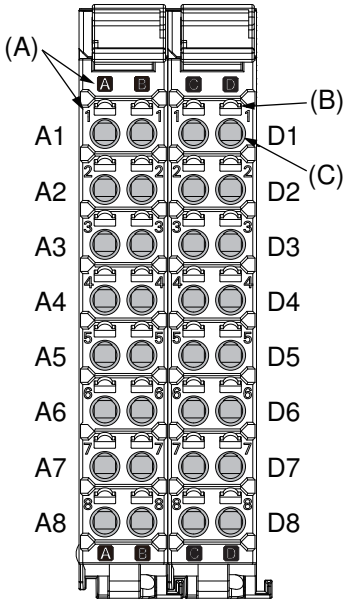

Letter	Name	Description
(A)	Terminal number indications	Terminal numbers for which A to D indicate the column, and 1 to 8 indicate the line are displayed. The terminal number is a combination of column and line, i.e. A1 to A8 and B1 to B8. A1 to A8 and B1 to B8 are terminal number of the left terminal block, C1 to C8 and D1 to D8 are terminal numbers of the right terminal block.
(B)	Release holes	Insert a flat-blade screwdriver into these holes to connect and remove the wires.
(C)	Terminal holes	The wires are inserted into these holes.

4

Installation and Wiring

This section describes how to install the NX Units, the types of power supplies used in the CPU Rack or Slave Terminal, their wiring methods, and how to wire the NX Units.

4-1 Installing NX Units 4-2

4-2 Power Supply Types and Wiring 4-3
- 4-2-1 Power supply type 4-3
- 4-2-2 Counter Input/External Input Power Supply 4-3
- 4-2-3 External Output Power Supply 4-5

4-3 Wiring the Terminals 4-6
- 4-3-1 Wiring to the Screwless Clamping Terminal Blocks 4-6
- 4-3-2 Preventing Incorrect Attachment of Terminal Blocks 4-16
- 4-3-3 Checking the Wiring 4-19

4-4 Terminal Block Arrangement and Wiring Example 4-20
- 4-4-1 NX-CT2120 4-20
- 4-4-2 NX-CT2220 4-25
- 4-4-3 NX-CT2320 4-29
- 4-4-4 NX-CT2420 4-33

4-5 Precautions for Wiring 4-37
- 4-5-1 When Prone to the Effects of Noise 4-37
- 4-5-2 Precautions When Connecting a Two-wire DC Sensor 4-39

4-1 Installing NX Units

This section describes how to install NX Units.
Refer to the user's manual for the CPU Unit or Communications Coupler Unit to which NX Units are connected for information on preparations of installation and installation in a control panel.

4-2 Power Supply Types and Wiring

This section describes the power supply types and wiring.

4-2-1 Power supply type

The following three types of power supplies supply power to the High-speed Counter Units as NX Units.

Power supply name	Description
Unit power supply	This power supply is used for operating the NX Units.
Counter Input/External Input Power Supply	This power supply is used for driving the High-speed Counter Unit counter input circuit and external input circuit, and for the connected external devices. I/O power supply from the NX bus is used.
External Output Power Supply	This power supply is used for driving the I/O circuits of the NX Units and for the connected external devices.

The wiring methods for the power supplies and grounding for NX Units depend on the specifications of the CPU Unit and Slave Terminal the NX Units are connected to. Refer to *Designing the Power Supply System* or *Wiring*, which are described both in the hardware user's manual for the CPU Unit to which NX Units are connected and user's manual for the Communications Coupler Unit, for details on the method for supplying power to the NX Units and the wiring method.

For the shield wire connection procedure when connecting High-speed Counter Units with external devices, refer to *4-4 Terminal Block Arrangement and Wiring Example* on page 4-20.

The subsequent sections describe the applications and supply methods for High-speed Counter Units counter input/external input power supply and external output power supply as well as how to calculate their total current consumption.

4-2-2 Counter Input/External Input Power Supply

The High-speed Counter Units counter input/external input power supply applications and supply method are shown below.

Counter Input/External Input Power Supply Applications

The I/O power supply is used for the following applications.

- High-speed Counter Unit counter circuit operation
- Power supply for external encoders, external sensors, and other connected external devices
- High-speed Counter Unit external input circuit drive

Counter Input/External Input Power Supply Method

Power is supplied through the NX bus connectors by connecting an I/O power supply to the I/O power supply terminals on the Communications Coupler Unit or Additional I/O Power Supply Unit.

Refer to *Designing the Power Supply System* and *Wiring* in the hardware user's manual for the connected CPU Unit for details on Units to which I/O power is supplied in a CPU Rack.
Refer to *Designing the Power Supply System* and *Wiring* in the user's manual for the connected Communications Coupler Unit for details on Units to which I/O power is supplied in a Slave Terminal.

Additional Information

NX-series Power Supply-related Units
The following three NX-series Units are related to power supply.
- Additional NX Unit Power Supply Units
- Additional I/O Power Supply Units
- I/O Power Supply Connection Units

Refer to for the specifications of these Units.
For a complete list of the latest power supply Units in the NX Series, refer to the product catalog or OMRON website, or contact your OMRON representative.

Calculating the Total Current Consumption from I/O Power Supply

The total current consumption of I/O power supplied from the NX bus must be within the range of the maximum I/O power supply current of the Communications Coupler Unit or the Additional I/O Power Supply Unit. However, when an Additional I/O Power Supply Unit is connected to the CPU Rack of a CPU Unit,the maximum I/O power supply current value may be smaller than that of the Additional I/O Power Supply Unit. For example, the maximum I/O power supply current for the CPU Rack of an NX1P2 CPU Unit is 4 A.
Refer to the hardware user's manual of the CPU Unit to which the NX Units are connected for details on restrictions for CPU Racks.
To confirm this and to calculate the I/O power supply capacity, calculate the total current consumption of the I/O power supply from the NX bus.
The total I/O current consumption from the NX bus is the sum of the following: the current consumption from the I/O power supply for the NX Units that receive power from the I/O power supply from the NX bus, the current consumption of those I/O circuits, and the current consumption of connected external devices.
The total current consumption from I/O power supply of the High-speed Counter Units is calculated as follows:

- Total current consumption from I/O power supply for High-speed Counter Units
  = (Current consumption from I/O power supply of Unit) + (Total input current for Unit voltage inputs)
  + (Total current consumption of connected external devices)

Note When you use the 5 V power supply for external supply, be sure to include that current too. Refer to *A-1 Data Sheet* on page A-2 for the method to convert a 5 V power supply current consumption to a 24 V power supply current consumption.

4-2-3 External Output Power Supply

High-speed Counter Unit external output power supply applications and supply method are shown below.

External Output Power Supply Applications

The I/O power supply is used for the following applications.

- High-speed Counter Unit external output circuit operation
- External output external load current
- Power supply for the connected external devices

External Output Power Supply Method

This method involves power supply to the Units from an external source.
Connect the High-speed Counter Unit external output power supply terminal to the power supply.

4-3 Wiring the Terminals

This section provides information on wiring the terminals on High-speed Counter Units.

⚠ WARNING

Make sure that the voltages and currents that are input to the Units and slaves are within the specified ranges.
Inputting voltages or currents that are outside of the specified ranges may cause accidents or fire.

4-3-1 Wiring to the Screwless Clamping Terminal Blocks

This section describes how to connect wires to the screwless clamping terminal blocks, the installation and removing methods, and functions for preventing incorrect attachment.

You can connect ferrules that are attached to the twisted wires to the screwless clamping terminal block. You can also connect the twisted wires or the solid wires to the screwless clamping terminal block. If you connect the ferrules, all you need to do to connect the wires is to insert the ferrules into the terminal holes.

Wiring Terminals

The terminals to be wired are as follows.

- I/O power supply terminals
- I/O terminals

Applicable Wires

You can connect twisted wires, solid wires, or ferrules attached to twisted wires to the screwless clamping terminal block. The applicable wire dimensions and preparation methods are given below.

● Dimensions of Wires Connected to the Terminal Block

The dimensions of wires that you can connect into the terminal holes of the screwless clamping terminal block are as in the figure below.
Process the applicable wires that are specified in the following description to apply the dimensions.

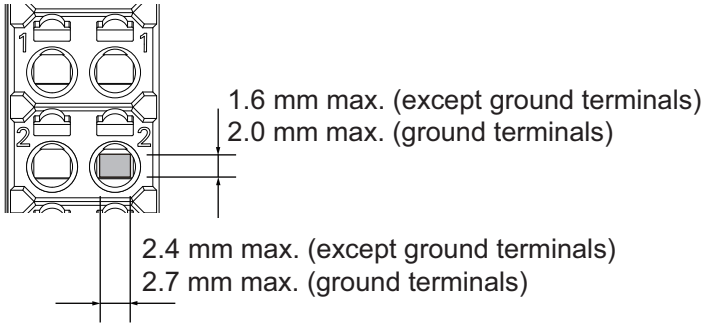

Using Ferrules

If you use ferrules, attach the twisted wires to them.
Observe the application instructions for your ferrules for the wire stripping length when attaching ferrules.
Always use plated one-pin ferrules. Do not use unplated ferrules or two-pin ferrules.

The applicable ferrules, wires, and crimping tools are given in the following table.

Terminal type	Manufacturer	Ferrule model	Applicable wire (mm^2 (AWG))	Crimping tool
All terminals except ground terminals	Phoenix Contact	AI0,34-8	0.34 (#22)	Phoenix Contact (Applicable wire sizes are given in parentheses.) CRIMPFOX 6 (0.25 to 6 mm^2, AWG24 to 10)
		AI0,5-8	0.5 (#20)	
		AI0,5-10		
		AI0,75-8	0.75 (#18)	
		AI0,75-10		
		AI1,0-8	1.0 (#18)	
		AI1,0-10		
		AI1,5-8	1.5 (#16)	
		AI1,5-10		
Ground terminals		AI2,5-10	2.0*1	
All terminals except ground terminals	Weidmuller	H0.14/12	0.14 (#26)	Weidmuller (Applicable wire sizes are given in parentheses.) PZ6 Roto (0.14 to 6 mm^2, AWG26 to 10)
		H0.25/12	0.25 (#24)	
		H0.34/12	0.34 (#22)	
		H0.5/14	0.5 (#20)	
		H0.5/16		
		H0.75/14	0.75 (#18)	
		H0.75/16		
		H1.0/14	1.0 (#18)	
		H1.0/16		
		H1.5/14	1.5 (#16)	
		H1.5/16		

*1. For the ferrule type AI2,5-10, use wires with a diameter of 2.0 to 2.1 mm^2. Wires with a diameter exceeding 2.1 mm^2 cannot be used with the screwless clamping terminal block.

When you use any ferrules other than those in the above table, crimp them to the twisted wires so that the following processed dimensions are achieved.

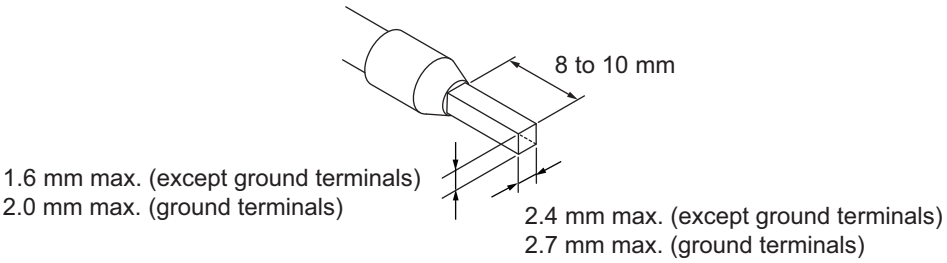

Using Twisted or Solid Wires

If you use twisted wires or solid wires, use the following table to determine the correct wire specifications.

Terminals		Wire type				Wire size	Conductor length (stripping length)
		Twisted wires		Solid wires			
Classification	Current capacity	Plated	Unplated	Plated	Unplated		
All terminals except ground terminals	2 A max.	Possible	Possible	Possible	Possible	0.08 to 1.5 mm^2 (AWG28 to 16)	8 to 10 mm
	Greater than 2 A and 4 A or less		Not possible	Possible*1	Not possible		
	Greater than 4 A	Possible*1		Not possible			
Ground terminals	---	Possible	Possible	Possible*2	Possible*2	2.0 mm^2	9 to 10 mm

*1. Secure wires to the screwless clamping terminal block. Refer to *Securing Wires* on page 4-11 for how to secure wires.
*2. With the NX-TB□□□1 Terminal Block, use twisted wires to connect the ground terminal. Do not use a solid wire.

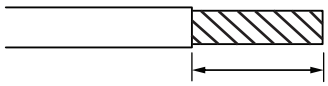

Conductor length (stripping length)

Precautions for Correct Use

- Use cables with suitable wire sizes for the carrying current. There are also restrictions on the current due to the ambient temperature. Refer to the manuals for the cables and use the cables correctly for the operating environment.
- For twisted wires, strip the sheath and twist the conductor portion. Do not unravel or bend the conductor portion of twisted wires or solid wires.

NG

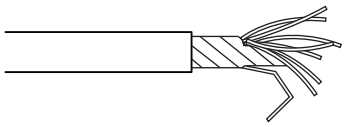

Unravel wires

NG

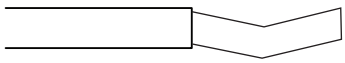

Bend wires

Additional Information

If more than 2 A will flow on the wires, use plated wires or use ferrules.

Connecting and Removing Wires

This section describes how to connect and remove wires.

● Terminal Block Parts and Names

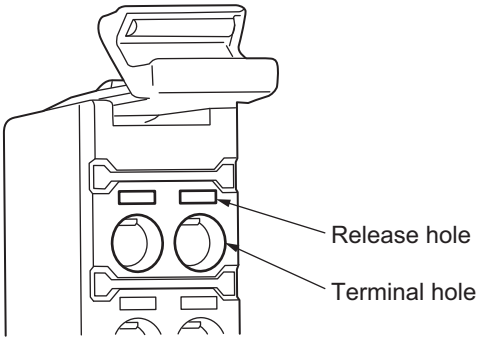

● Required Tools

Use a flat-blade screwdriver to connect and remove wires.
Use the following flat-blade screwdriver.

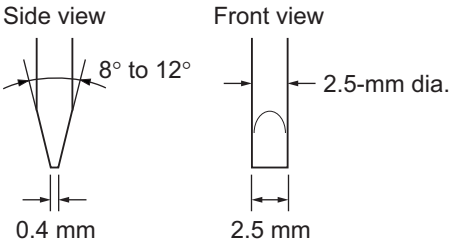

Recommended screwdriver

Model	Manufacturer
SZF 0-0,4X2,5	Phoenix Contact

● Connecting Ferrules

Insert the ferrule straight into the terminal hole.
You do not need to insert a flat-blade screwdriver into the release hole.

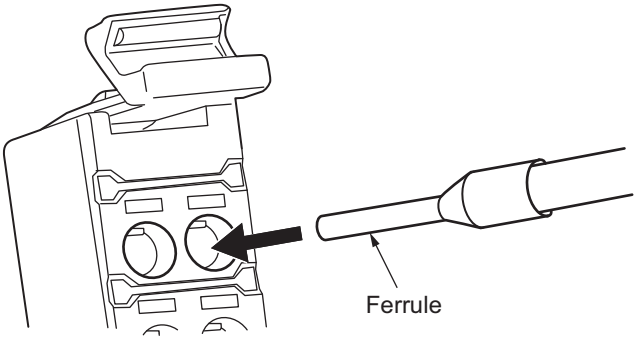

After you make a connection, make sure that the ferrule is securely connected to the terminal block.

● Connecting Twisted Wires or Solid Wires

Use the following procedure to connect the twisted wires or solid wires to the terminal block.

1 Press a flat-blade screwdriver diagonally into the release hole.
The optimal angle for insertion is between 10° to 15°. If the screwdriver is inserted correctly, you should feel resistance from the spring inside the release hole.

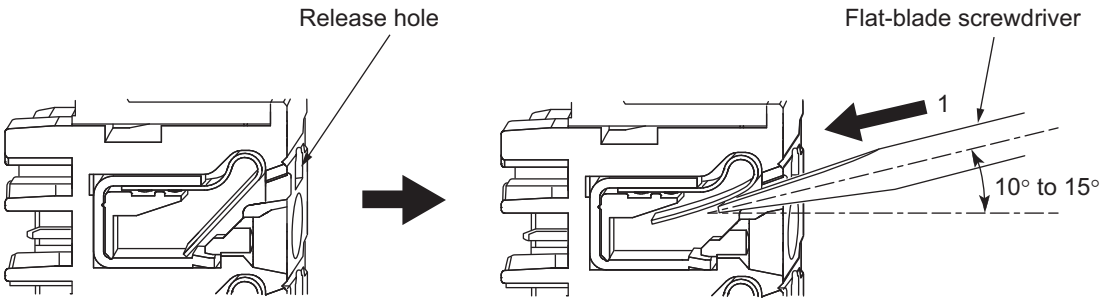

2 Leave the flat-blade screwdriver pressed into the release hole and insert the twisted wire or the solid wire into the terminal hole.
Insert the stripped portion of the wire all the way into the terminal hole to prevent shorting.

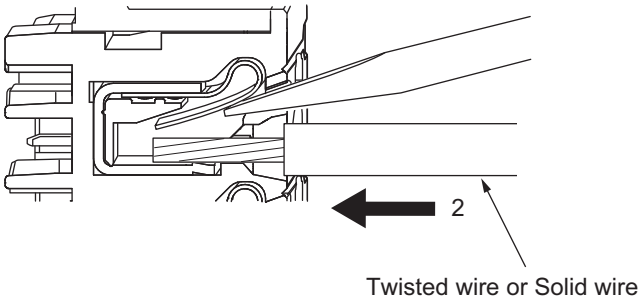

3 Remove the flat-blade screwdriver from the release hole.

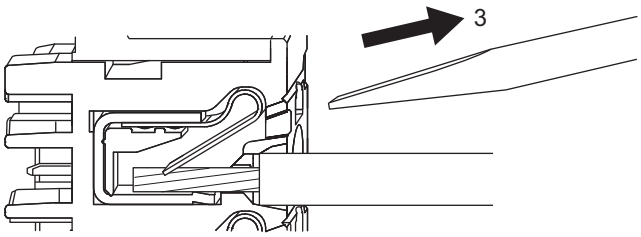

After you make a connection, lightly pull the twisted wire or the solid wire to make sure that the wire is securely connected to the terminal block.

Precautions for Safe Use

- Do not press the flat-blade screwdriver straight into the release holes on a screwless clamping terminal block. Doing so may damage the terminal block.

NG **OK**

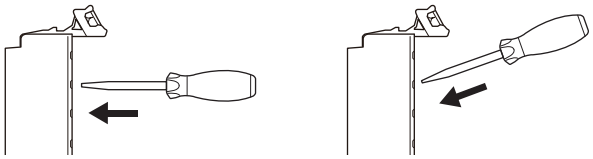

- When you insert a flat-blade screwdriver into a release hole on a screwless clamping terminal block, press it down with a force of 30N or less. Applying excessive force may damage the terminal block.
- Do not incline or twist the flat-blade screwdriver while it is in a release hole on a screwless clamping terminal block. Doing so may damage the terminal block.

NG **NG**

- Make sure that all wiring is correct.
- Do not bend the cable forcibly. Doing so may break the cables.

Securing Wires

It is necessary to secure wires to the screwless clamping terminal block depending on the wire types that are used or the current flows on the wires.
The following table gives the necessity for securing wires.

Terminals		Wire type				
Classification	Current capacity	Ferrule	Twisted wires		Solid wires	
			Plated	Unplated	Plated	Unplated
All terminals except ground terminals	2 A max.	No	No	No	No	No
	Greater than 2 A and 4 A or less			Not possible	Yes	Not possible
	Greater than 4 A		Yes		Not possible	
Ground terminals	---		No	No	No	No

Use the following procedure to secure the wires.

1 Prepare a cable tie.
A cable tie can be used with a width of 4 mm or less and a thickness of 1.5 mm or less. Select a cable tie correctly for the operating environment.

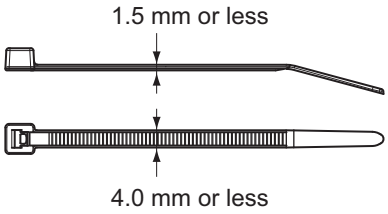

2 Pass a cable tie through the hole for securing wires on the bottom of the screwless clamping terminal block.

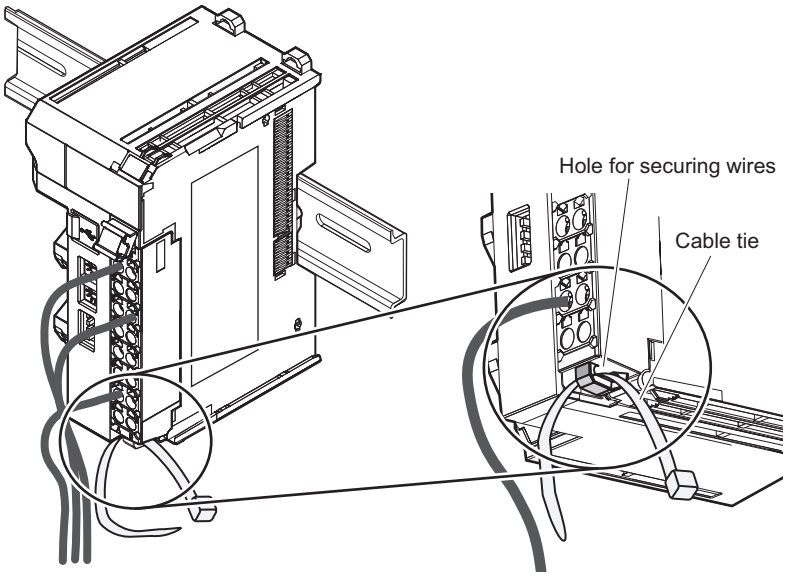

3 Bundle the wires with a cable tie and secure them to the screwless clamping terminal block.

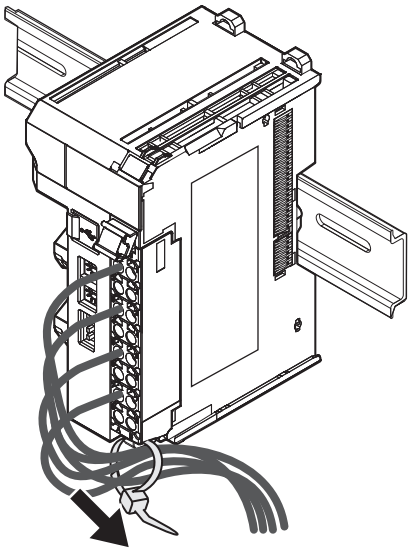

Secure wires within the range of 30 mm from the screwless clamping terminal block.

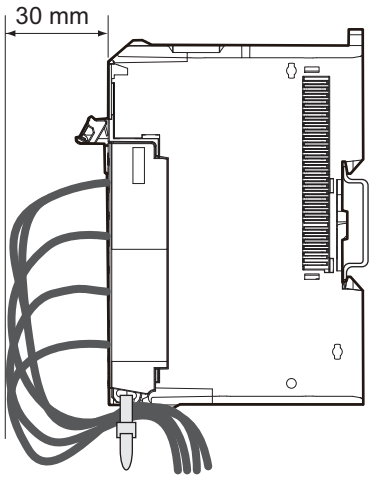

● Removing Wires

Use the following procedure to remove the wires from the terminal block.
The removal method is the same for ferrules, twisted wires, and solid wires.

If wires are secured firmly to the terminal block, release them first.

1 Press the flat-blade screwdriver diagonally into the release hole.
The optimal angle for insertion is between 10° to 15°. If the screwdriver is inserted correctly, you should feel resistance from the spring inside the release hole.

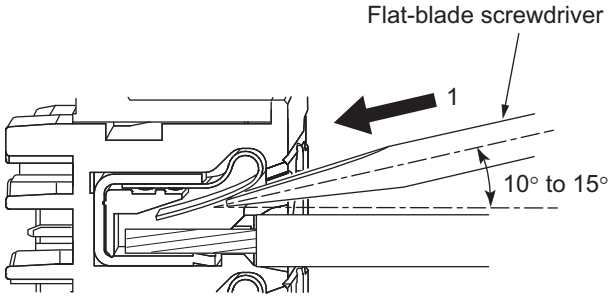

2 Insert the flat-blade screwdriver into the release hole and remove the wire from the terminal hole.

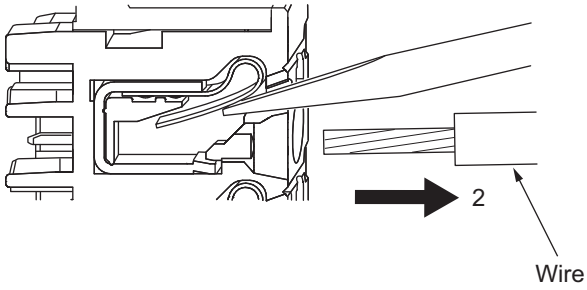

3 Remove the flat-blade screwdriver from the release hole.

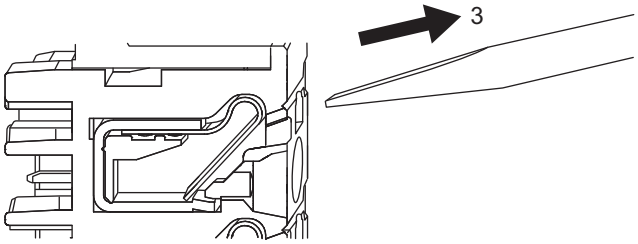

Precautions for Safe Use

- Do not press the flat-blade screwdriver straight into the release holes on a screwless clamping terminal block. Doing so may damage the terminal block.

NG **OK**

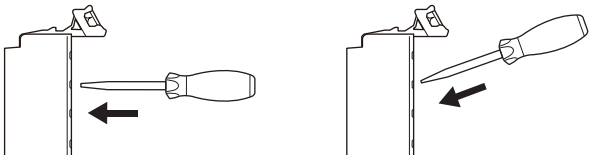

- When you insert a flat-blade screwdriver into a release hole on a screwless clamping terminal block, press it down with a force of 30N or less. Applying excessive force may damage the terminal block.
- Do not incline or twist the flat-blade screwdriver while it is in a release hole on a screwless clamping terminal block. Doing so may damage the terminal block.

NG **NG**

- Make sure that all wiring is correct.
- Do not bend the cable forcibly. Doing so may break the cables.

Removing a Terminal Block

1 Press the lock lever on the terminal block and pull out the top of the terminal block to remove it.

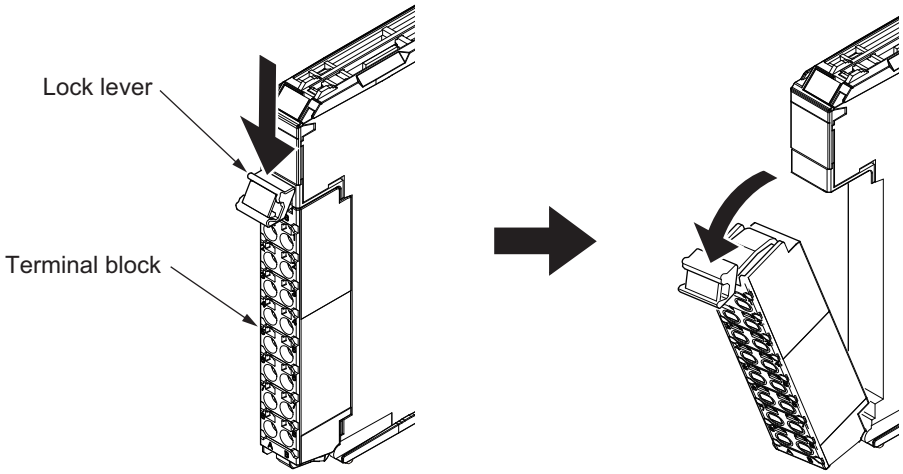

Attaching a Terminal Block

1 Mount the terminal block hook that is applicable to each Unit model on the guide at the bottom of the NX Unit, lift up the terminal block, and press in on the top of the terminal block until you hear it engage.
The terminal block will click into place on the Unit. After you mount the terminal block, make sure that it is locked to the Unit.

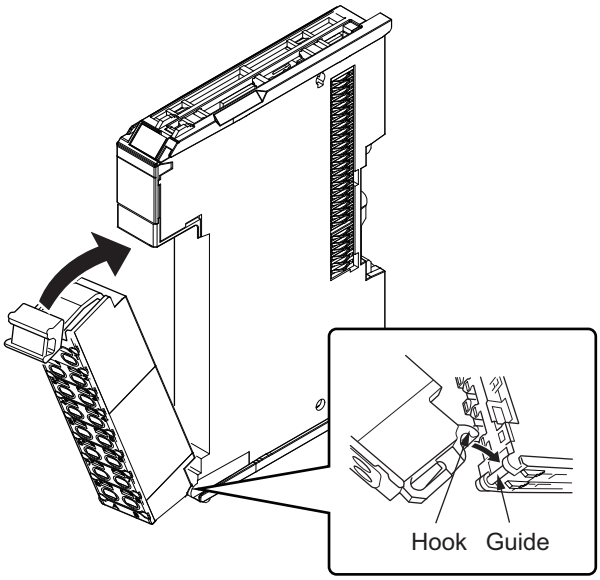

Refer to *3-3 Terminal Blocks* on page 3-8 for the applicable terminal blocks.

4-3-2 Preventing Incorrect Attachment of Terminal Blocks

In order to prevent unintentionally installing the wrong terminal block, you can limit the combination of a Unit and a terminal block.

Insert three Coding Pins (NX-AUX02) into three of the six incorrect attachment prevention holes on the Unit and on the terminal block. Insert these pins into positions so that they do not interfere with each other when the Unit and terminal block are connected to each other.
You can use these pins to create a combination in which the wrong terminal block cannot be attached because the pin patterns do not match.

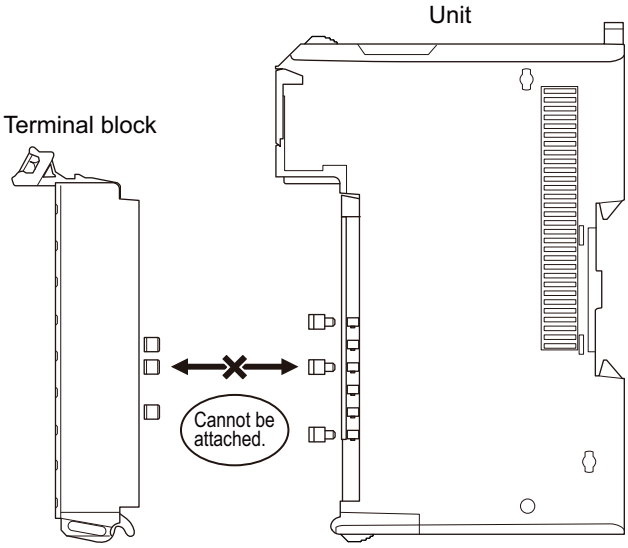

● Types of Coding Pins

There are two types of Coding Pins, both with their own unique shape: one for terminal blocks and one for Units.
Three pins come with each runner.

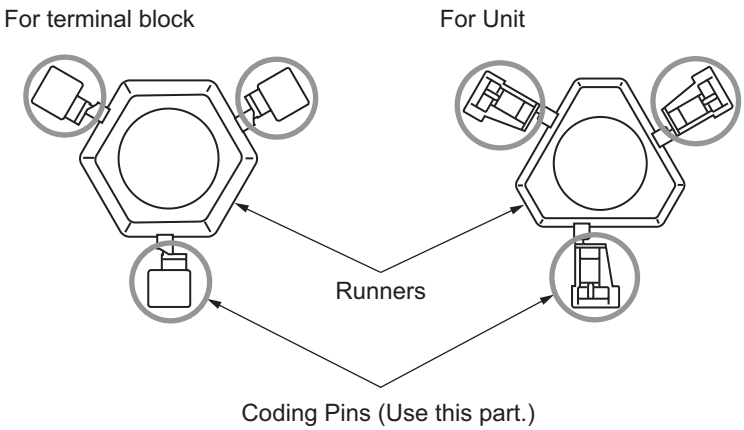

Use the following Coding Pins.

Name	Model	Specification
Coding Pin	NX-AUX02	For 10 Units (Terminal block: 30 pins, Unit: 30 pins)

● Insertion Locations and Patterns of Coding Pins

Insert three Coding Pins each on the terminal block and on the Unit at the positions designated by the numbers 1 through 6 in the figure below.

As shown in the following table, there are 20 unique pin patterns that you can use.

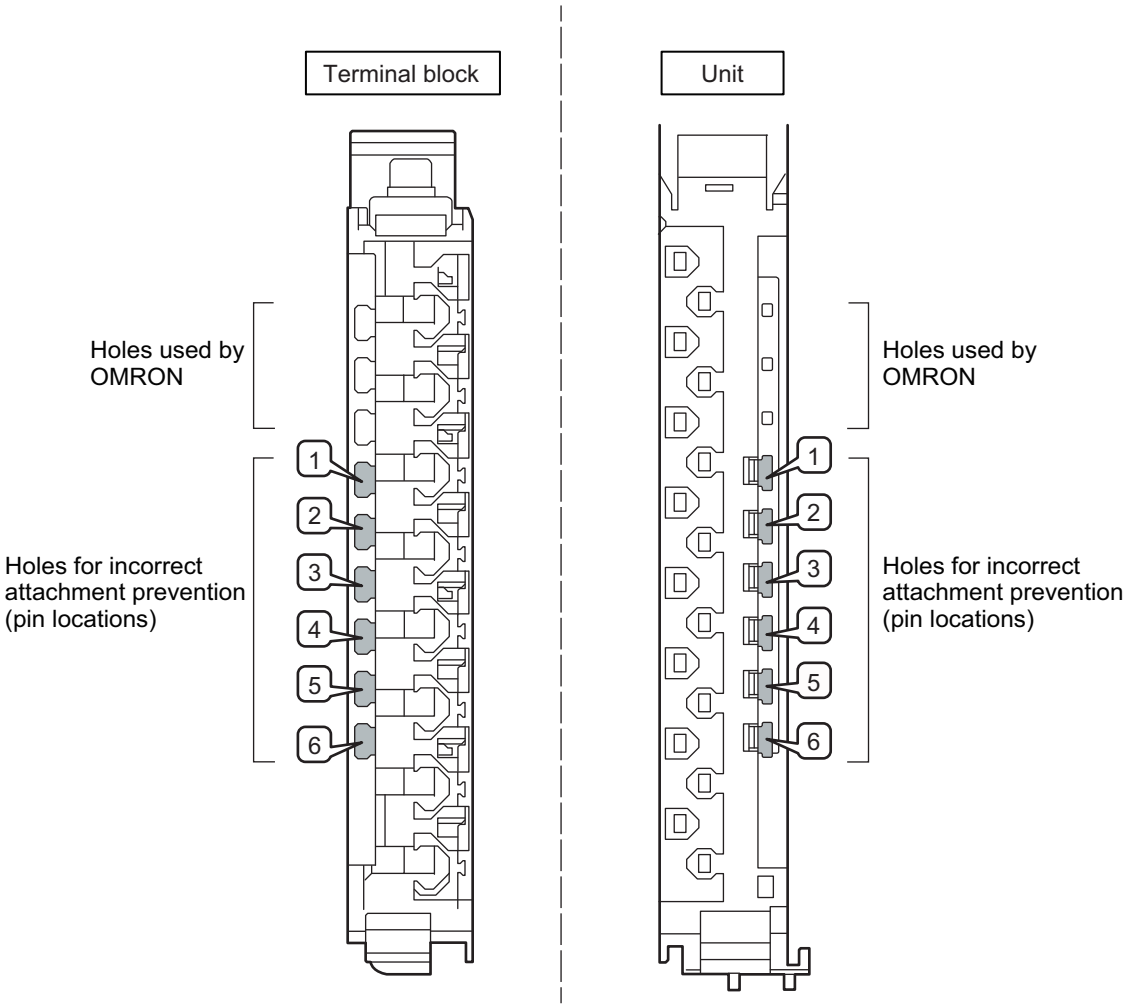

○: Pin inserted

Pattern	Pin locations for terminal block						Pin locations for Unit					
	1	2	3	4	5	6	1	2	3	4	5	6
No.1	○	○	○							○	○	○
No.2	○	○		○					○		○	○
No.3	○	○			○				○	○		○
No.4	○	○				○			○	○	○	
No.5	○		○	○				○			○	○
No.6	○		○		○			○		○		○
No.7	○		○			○		○		○	○	
No.8	○			○	○			○	○			○
No.9	○			○		○		○	○		○	
No.10	○				○	○		○	○	○		
No.11		○	○	○			○				○	○
No.12		○	○		○		○			○		○
No.13		○	○			○	○			○	○	
No.14		○		○	○		○		○			○
No.15		○		○		○	○		○		○	
No.16		○			○	○	○		○	○		
No.17			○	○	○		○	○				○
No.18			○	○		○	○	○			○	
No.19			○		○	○	○	○		○		
No.20				○	○	○	○	○	○			

Two sets of NX-AUX02 Pins are required to make the maximum of 20 pin patterns. (One set for 10 Units.)

Precautions for Correct Use

- The holes not designated by the numbers 1 through 6 in the above figure are used by OMRON. If you insert any Coding Pins into the holes reserved for use by OMRON, you will not be able to mount the terminal block to the Unit.
- Do not use Coding Pins that have been attached and removed.

Inserting the Coding Pins

1 Hold the pins by the runner and insert a pin into one of the incorrect attachment prevention holes on the terminal block or on the Unit.

Terminal block

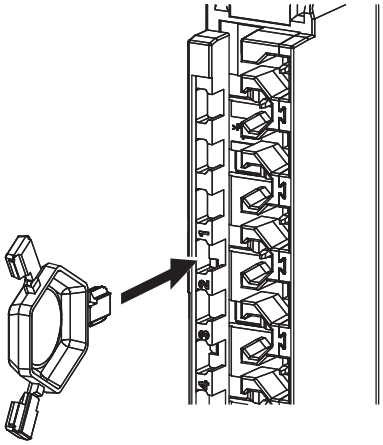

Unit

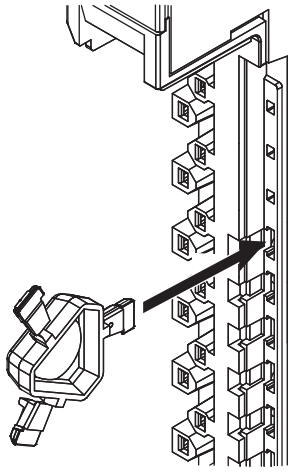

2 Rotate the runner to break off the Coding Pin.

Terminal block

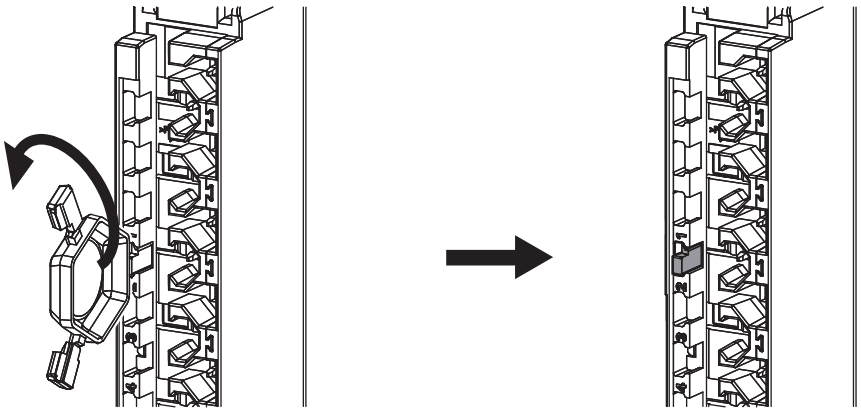

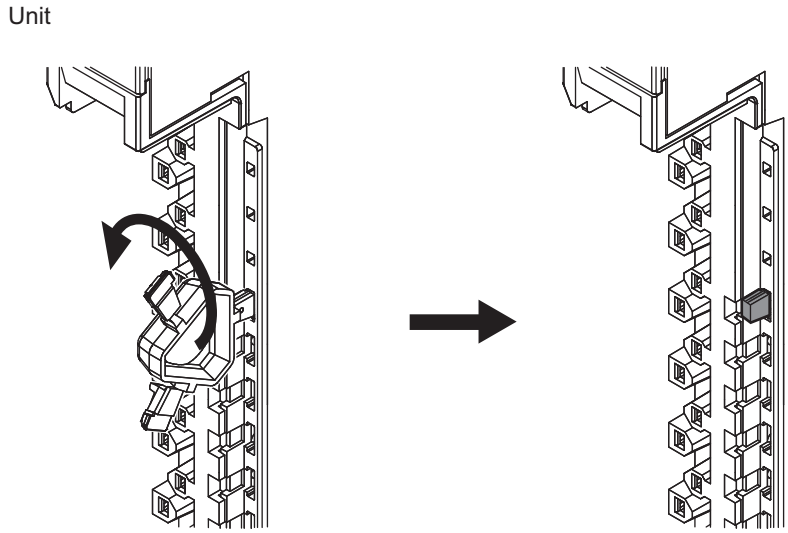

4-3-3 Checking the Wiring

Check the wiring by reading input data or writing output data from Slave Terminals using the Watch Tab Page of the Support Software.

- For inputs, you can turn ON/OFF the inputs from external devices that are connected to the target Units and monitor the results. If the input device is an encoder, you can rotate the encoder to change the input value and monitor the results.
- For outputs, you can execute the I/O outputs of the target Units and check the operation of the connected external devices.

Refer to *6-1 Specifications of I/O Data* on page 6-2 for details on I/O data.

For details on monitoring and I/O output operations using the Support Software, refer to the operation manual for the Support Software that you are using.

Additional Information

- In the Sysmac Studio, you can check the wiring from the I/O Map or Watch Tab Page. If you use the I/O Map, you can also monitor and perform forced refreshing even if the variables are not defined or the algorithms are not created. Therefore, you can easily check the wiring. Refer to the *Sysmac Studio Version 1 Operation Manual (Cat. No. W504)* for details on monitoring and forced refreshing operations.
- Some Communications Coupler Units support I/O checking that allows you to check wiring with only the Slave Terminal. Refer to the user's manual of the Communications Coupler Unit for detailed information on the support and functionality of I/O checking for your Communications Coupler Unit.

4-4 Terminal Block Arrangement and Wiring Example

For each High-speed Counter Unit model, terminal block array and wiring examples for 2ch mode and 6ch mode are described here.
For Counter Input A-phase/B-phase/Z-phase wiring, use a shielded cable with a ground of 100 Ω or less for the shield.

4-4-1 NX-CT2120

Terminal block array and wiring example for NX-CT2120 2ch mode and 6ch mode are shown below.
For Counter Input A-phase/B-phase/Z-phase wiring, use a shielded cable with a ground of 100 Ω or less for the shield.

In 2ch Mode

● Terminal Block Arrangement

High-speed Counter Unit
NX-CT2120

A1	B1	C1	D1
A1_24	B1_24	IN0	IN1
A1_5	B1_5	IN2	IN3
Z1_24	5V_1	IN4	IN5
Z1_5	0V_1	IOG	IOG
A2_24	B2_24	OUT0	OUT1
A2_5	B2_5	OUT2	OUT3
Z2_24	5V_2	OUT4	OUT5
Z2_5	0V_2	V_O	G_O
A8	B8	C8	D8

Pin No.	Symbol	I/O	Name	Pin No.	Symbol	I/O	Name
A1	A1_24	I	Counter 1 input A-phase (24 V)	B1	B1_24	I	Counter 1 input B-phase (24 V)
A2	A1_5	I	Counter 1 input A-phase (5 V)	B2	B1_5	I	Counter 1 input B-phase (5 V)
A3	Z1_24	I	Counter 1 input Z-phase (24 V)	B3	5V_1	O	Encoder power supply output 1, 5 V*1
A4	Z1_5	I	Counter 1 input Z-phase (5 V)	B4	0V_1	O	Encoder power supply output 1, 0 V*1
A5	A2_24	I	Counter 2 input A-phase (24 V)	B5	B2_24	I	Counter 2 input B-phase (24 V)
A6	A2_5	I	Counter 2 input A-phase (5 V)	B6	B2_5	I	Counter 2 input B-phase (5 V)
A7	Z2_24	I	Counter 2 input Z-phase (24 V)	B7	5V_2	O	Encoder power supply output 2, 5 V*1
A8	Z2_5	I	Counter 2 input Z-phase (5 V)	B8	0V_2	O	Encoder power supply output 2, 0 V*1

*1. Encoder power output can be used as a power supply for the 5 V type encoder. When using a 24 V encoder, do not use the encoder power output.

Pin No.	Symbol	I/O	Name	Pin No.	Symbol	I/O	Name
C1	IN0	I	External Input0	D1	IN1	I	External Input1
C2	IN2	I	External Input2	D2	IN3	I	External Input3
C3	IN4	I	External Input4	D3	IN5	I	External Input5
C4	IOG	-	I/O power supply −	D4	IOG	-	I/O power supply −
C5	OUT0	O	External Output0	D5	OUT1	O	External Output1
C6	OUT2	O	External Output2	D6	OUT3	O	External Output3
C7	OUT4	O	External Output4	D7	OUT5	O	External Output5
C8	V_O	I	External Output Power Supply	D8	G_O	I	External Output Power Supply

● Wiring Example (NX-CT2120 2ch mode)

Counter Input Wiring Example

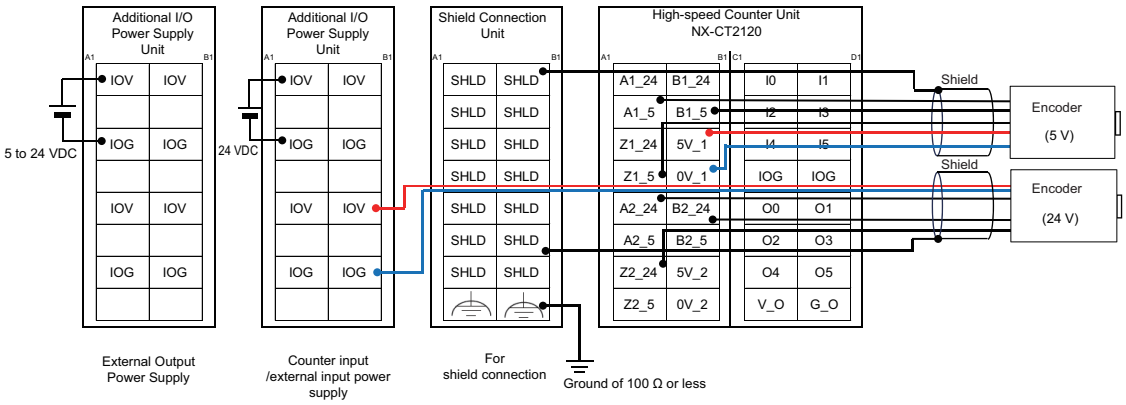

External I/O Wiring Example

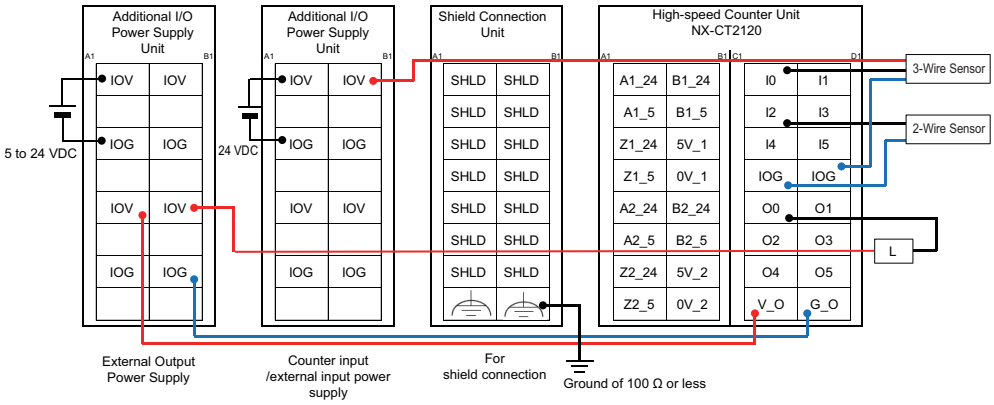

In 6ch Mode

● Terminal Block Arrangement

High-speed Counter Unit
NX-CT2120

A1	B1	C1	D1
A1_24	A2_24	IN0	IN1
A1_5	A2_5	IN2	IN3
A3_24	5V_1	IN4	IN5
A3_5	0V_1	IOG	IOG
A4_24	A5_24	OUT0	OUT1
A4_5	A5_5	OUT2	OUT3
A6_24	5V_2	OUT4	OUT5
A6_5	0V_2	V_O	G_O
A8	B8	C8	D8

Pin No.	Symbol	I/O	Name	Pin No.	Symbol	I/O	Name
A1	A1_24	I	Counter 1 input A-phase (24 V)	B1	A2_24	I	Counter 2 input A-phase (24 V)
A2	A1_5	I	Counter 1 input A-phase (5 V)	B2	A2_5	I	Counter 2 input A-phase (5 V)
A3	A3_24	I	Counter 3 input A-phase (24 V)	B3	5V_1	O	Encoder power supply output, 5 V*1
A4	A3_5	I	Counter 3 input A-phase (5 V)	B4	0V_1	O	Encoder power supply output, 0 V*1
A5	A4_24	I	Counter 4 input A-phase (24 V)	B5	A5_24	I	Counter 5 input A-phase (24 V)
A6	A4_5	I	Counter 4 input A-phase (5 V)	B6	A5_5	I	Counter 5 input A-phase (5 V)
A7	A6_24	I	Counter 6 input A-phase (24 V)	B7	5V_2	O	Encoder power supply output, 5 V*1
A8	A6_5	I	Counter 6 input A-phase (5 V)	B8	0V_2	O	Encoder power supply output, 0 V*1

*1. Encoder power output can be used as a power supply for the 5 V type encoder. When using a 24 V encoder, do not use the encoder power output.

Pin No.	Symbol	I/O	Name	Pin No.	Symbol	I/O	Name
C1	IN0	I	External Input0	D1	IN1	I	External Input1
C2	IN2	I	External Input2	D2	IN3	I	External Input3
C3	IN4	I	External Input4	D3	IN5	I	External Input5
C4	IOG	-	I/O power supply −	D4	IOG	-	I/O power supply −
C5	OUT0	O	External Output0	D5	OUT1	O	External Output1
C6	OUT2	O	External Output2	D6	OUT3	O	External Output3
C7	OUT4	O	External Output4	D7	OUT5	O	External Output5
C8	V_O	I	External Output Power Supply	D8	G_O	I	External Output Power Supply

Wiring Example (NX-CT2120 6ch mode)

Counter Input Wiring Example

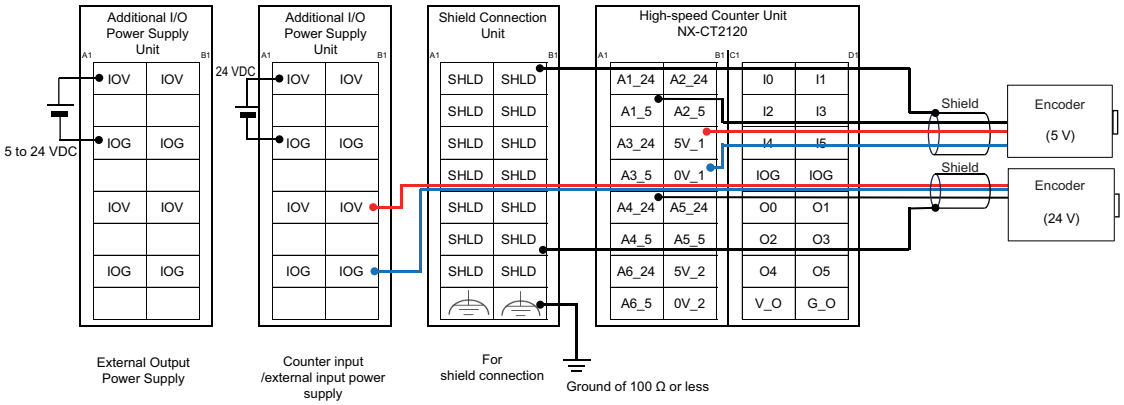

External I/O Wiring Example

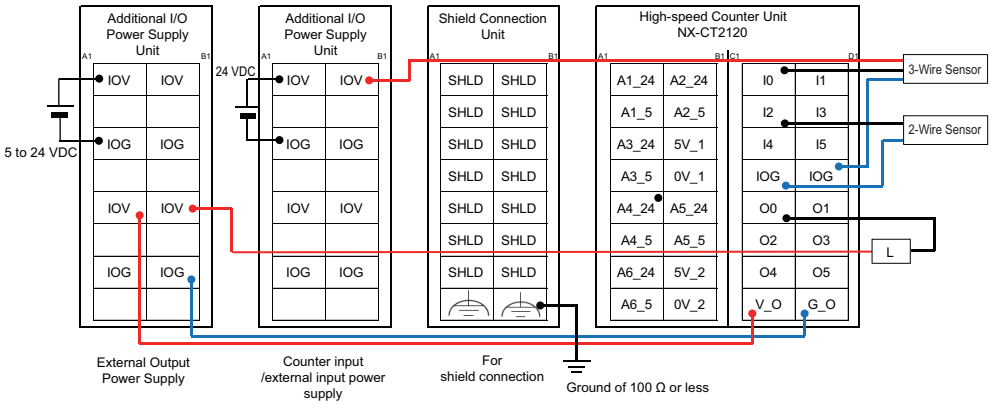

4-4-2 NX-CT2220

Terminal block array and wiring example for NX-CT2220 2ch mode and 6ch mode are shown below. For Counter Input A-phase/B-phase/Z-phase wiring, use a shielded cable with a ground of 100 Ω or less for the shield.

In 2ch Mode

● Terminal Block Arrangement

High-speed Counter Unit
NX-CT2220

A1	B1	C1	D1
A1_24	B1_24	IN0	IN1
A1_5	B1_5	IN2	IN3
Z1_24	5V_1	IN4	IN5
Z1_5	0V_1	IOV	IOV
A2_24	B2_24	OUT0	OUT1
A2_5	B2_5	OUT2	OUT3
Z2_24	5V_2	OUT4	OUT5
Z2_5	0V_2	V_O	G_O
A8	B8	C8	D8

Pin No.	Symbol	I/O	Name	Pin No.	Symbol	I/O	Name
A1	A1_24	I	Counter 1 input A-phase (24 V)	B1	B1_24	I	Counter 1 input B-phase (24 V)
A2	A1_5	I	Counter 1 input A-phase (5 V)	B2	B1_5	I	Counter 1 input B-phase (5 V)
A3	Z1_24	I	Counter 1 input Z-phase (24 V)	B3	5V_1	O	Encoder power supply output 1, 5 V*1
A4	Z1_5	I	Counter 1 input Z-phase (5 V)	B4	0V_1	O	Encoder power supply output 1, 0 V*1
A5	A2_24	I	Counter 2 input A-phase (24 V)	B5	B2_24	I	Counter 2 input B-phase (24 V)
A6	A2_5	I	Counter 2 input A-phase (5 V)	B6	B2_5	I	Counter 2 input B-phase (5 V)
A7	Z2_24	I	Counter 2 input Z-phase (24 V)	B7	5V_2	O	Encoder power supply output 2, 5 V*1
A8	Z2_5	I	Counter 2 input Z-phase (5 V)	B8	0V_2	O	Encoder power supply output 2, 0 V*1

*1. Encoder power output can be used as a power supply for the 5 V type encoder. When using a 24 V encoder, do not use the encoder power output.

Pin No.	Symbol	I/O	Name	Pin No.	Symbol	I/O	Name
C1	IN0	I	External Input0	D1	IN1	I	External Input1
C2	IN2	I	External Input2	D2	IN3	I	External Input3
C3	IN4	I	External Input4	D3	IN5	I	External Input5
C4	IOV	-	I/O power supply +	D4	IOV	-	I/O power supply +
C5	OUT0	O	External Output0	D5	OUT1	O	External Output1
C6	OUT2	O	External Output2	D6	OUT3	O	External Output3
C7	OUT4	O	External Output4	D7	OUT5	O	External Output5
C8	V_O	I	External Output Power Supply	D8	G_O	I	External Output Power Supply

● Wiring Example (NX-CT2220 2ch mode)

Counter Input Wiring Example

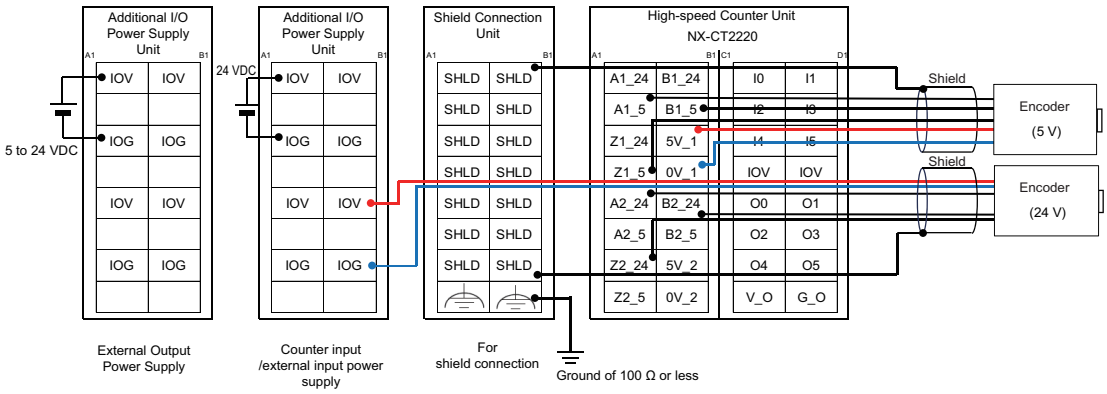

External I/O Wiring Example

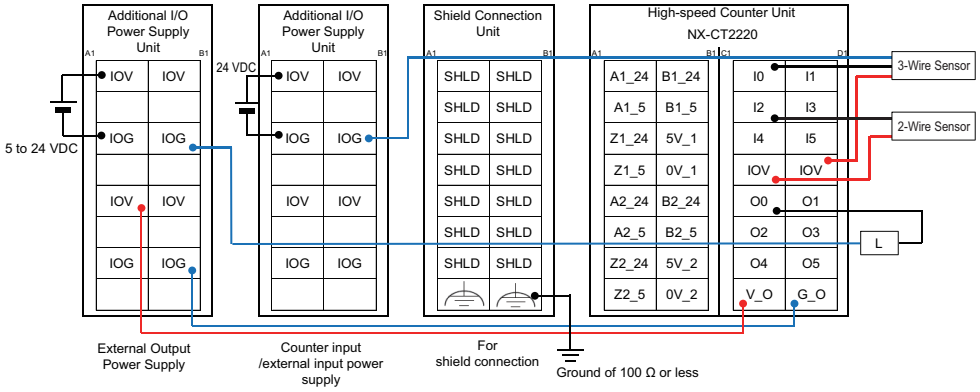

In 6ch Mode

Terminal Block Arrangement

High-speed Counter Unit
NX-CT2220

A1	B1	C1	D1
A1_24	A2_24	IN0	IN1
A1_5	A2_5	IN2	IN3
A3_24	5V_1	IN4	IN5
A3_5	0V_1	IOV	IOV
A4_24	A5_24	OUT0	OUT1
A4_5	A5_5	OUT2	OUT3
A6_24	5V_2	OUT4	OUT5
A6_5	0V_2	V_O	G_O
A8	B8	C8	D8

Pin No.	Symbol	I/O	Name	Pin No.	Symbol	I/O	Name
A1	A1_24	I	Counter 1 input A-phase (24 V)	B1	A2_24	I	Counter 2 input A-phase (24 V)
A2	A1_5	I	Counter 1 input A-phase (5 V)	B2	A2_5	I	Counter 2 input A-phase (5 V)
A3	A3_24	I	Counter 3 input A-phase (24 V)	B3	5V_1	O	Encoder power supply output, 5 V*1
A4	A3_5	I	Counter 3 input A-phase (5 V)	B4	0V_1	O	Encoder power supply output, 0 V*1
A5	A4_24	I	Counter 4 input A-phase (24 V)	B5	A5_24	I	Counter 5 input A-phase (24 V)
A6	A4_5	I	Counter 4 input A-phase (5 V)	B6	A5_5	I	Counter 5 input A-phase (5 V)
A7	A6_24	I	Counter 6 input A-phase (24 V)	B7	5V_2	O	Encoder power supply output, 5 V*1
A8	A6_5	I	Counter 6 input A-phase (5 V)	B8	0V_2	O	Encoder power supply output, 0 V*1

*1. Encoder power output can be used as a power supply for the 5 V type encoder. When using a 24 V encoder, do not use the encoder power output.

Pin No.	Symbol	I/O	Name	Pin No.	Symbol	I/O	Name
C1	IN0	I	External Input0	D1	IN1	I	External Input1
C2	IN2	I	External Input2	D2	IN3	I	External Input3
C3	IN4	I	External Input4	D3	IN5	I	External Input5
C4	IOV	-	I/O power supply +	D4	IOV	-	I/O power supply +
C5	OUT0	O	External Output0	D5	OUT1	O	External Output1
C6	OUT2	O	External Output2	D6	OUT3	O	External Output3
C7	OUT4	O	External Output4	D7	OUT5	O	External Output5
C8	V_O	I	External Output Power Supply	D8	G_O	I	External Output Power Supply

● Wiring Example (NX-CT2220 6ch mode)

Counter Input Wiring Example

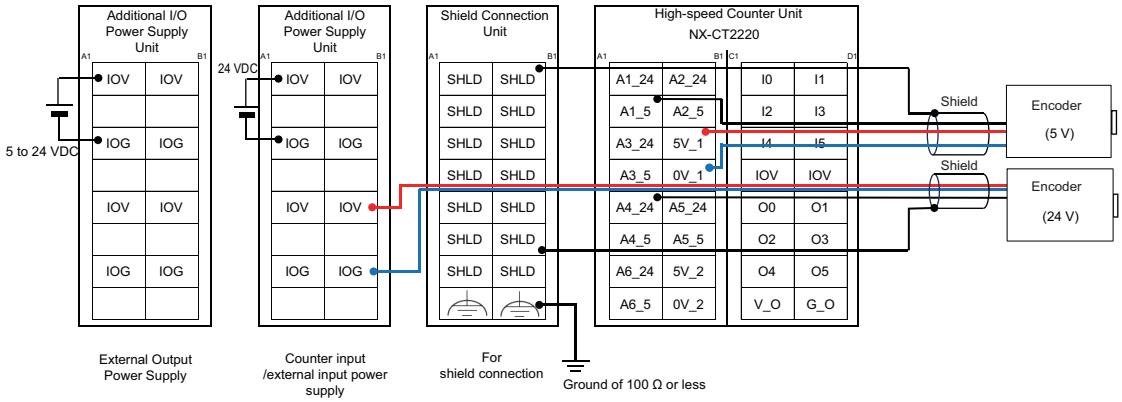

External I/O Wiring Example

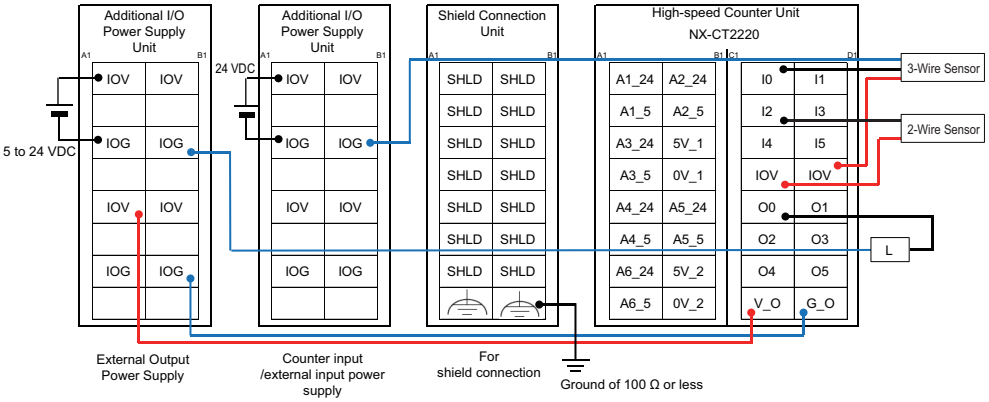

4-4-3 NX-CT2320

Terminal block array and wiring examples for NX-CT2320 2ch mode and 6ch mode are shown below. For Counter Input A-phase/B-phase/Z-phase wiring, use a twisted-pair shielded cable with a ground of 100 Ω or less for the shield.

In 2ch Mode

● Terminal Block Arrangement

High-speed Counter Unit
NX-CT2320

A1	B1	C1	D1
A1+	B1+	IN0	IN1
A1-	B1-	IN2	IN3
Z1+	5V_1	IN4	IN5
Z1-	0V_1	IOG	IOG
A2+	B2+	OUT0	OUT1
A2-	B2-	OUT2	OUT3
Z2+	5V_2	OUT4	OUT5
Z2-	0V_2	V_O	G_O
A8	B8	C8	D8

Pin No.	Symbol	I/O	Name	Pin No.	Symbol	I/O	Name
A1	A1+	I	Counter 1 input A-phase +	B1	B1+	I	Counter 1 input B-phase +
A2	A1-	I	Counter 1 input A-phase -	B2	B1-	I	Counter 1 input B-phase -
A3	Z1+	I	Counter 1 input Z-phase +	B3	5V_1	O	Encoder power supply output 1, 5 V
A4	Z1-	I	Counter 1 input Z-phase -	B4	0V_1	O	Encoder power supply output 1, 0 V
A5	A2+	I	Counter 2 input A-phase +	B5	B2+	I	Counter 2 input B-phase +
A6	A2-	I	Counter 2 input A-phase -	B6	B2-	I	Counter 2 input B-phase -
A7	Z2+	I	Counter 2 input Z-phase +	B7	5V_2	O	Encoder power supply output 2, 5 V
A8	Z2-	I	Counter 2 input Z-phase -	B8	0V_2	O	Encoder power supply output 2, 0 V

Pin No.	Symbol	I/O	Name	Pin No.	Symbol	I/O	Name
C1	IN0	I	External Input0	D1	IN1	I	External Input1
C2	IN2	I	External Input2	D2	IN3	I	External Input3
C3	IN4	I	External Input4	D3	IN5	I	External Input5
C4	IOG	-	I/O power supply −	D4	IOG	-	I/O power supply −
C5	OUT0	O	External Output0	D5	OUT1	O	External Output1
C6	OUT2	O	External Output2	D6	OUT3	O	External Output3
C7	OUT4	O	External Output4	D7	OUT5	O	External Output5
C8	V_O	I	External Output Power Supply	D8	G_O	I	External Output Power Supply

Wiring Example (NX-CT2320 2ch mode)

Counter Input Wiring Example

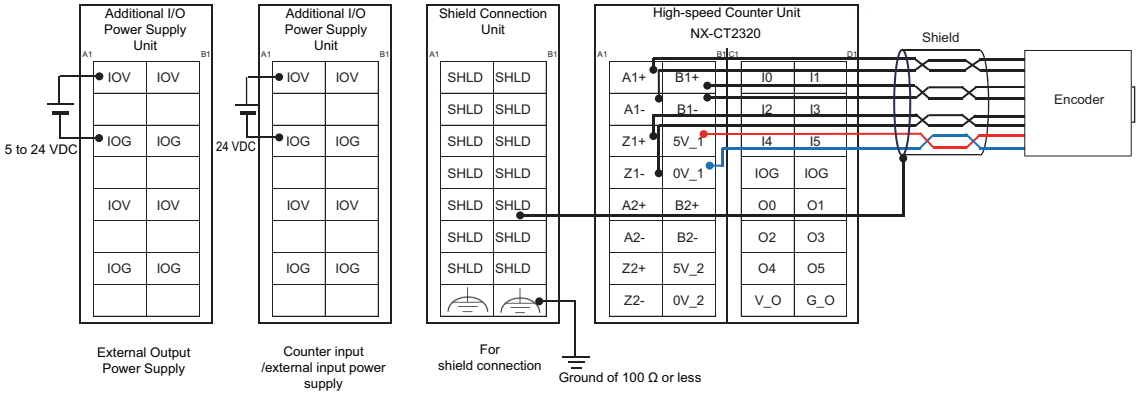

External I/O Wiring Example

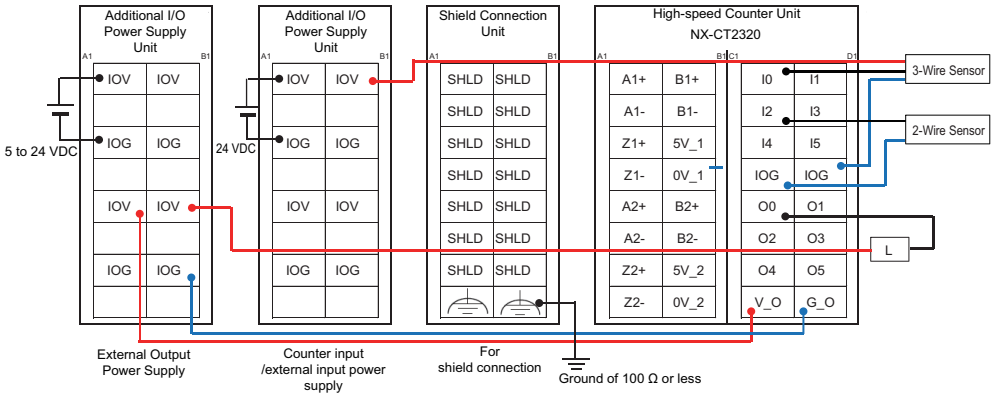

In 6ch Mode

● Terminal Block Arrangement

High-speed Counter Unit
NX-CT2320

A1	B1	C1	D1
A1+	A2+	IN0	IN1
A1-	A2-	IN2	IN3
A3+	5V_1	IN4	IN5
A3-	0V_1	IOG	IOG
A4+	A5+	OUT0	OUT1
A4-	A5-	OUT2	OUT3
A6+	5V_2	OUT4	OUT5
A6-	0V_2	V_O	G_O
A8	B8	C8	D8

Pin No.	Symbol	I/O	Name
A1	A1+	I	Counter 1 input A-phase +
A2	A1-	I	Counter 1 input A-phase -
A3	A3+	I	Counter 3 input A-phase +
A4	A3-	I	Counter 3 input A-phase -
A5	A4+	I	Counter 4 input A-phase +
A6	A4-	I	Counter 4 input A-phase -
A7	A6+	I	Counter 6 input A-phase +
A8	A6-	I	Counter 6 input A-phase -

Pin No.	Symbol	I/O	Name
B1	A2+	I	Counter 2 input A-phase +
B2	A2-	I	Counter 2 input A-phase -
B3	5V_1	O	Encoder power supply output, 5 V
B4	0V_1	O	Encoder power supply output, 0 V
B5	A5+	I	Counter 5 input A-phase +
B6	A5-	I	Counter 5 input A-phase -
B7	5V_2	O	Encoder power supply output, 5 V
B8	0V_2	O	Encoder power supply output, 0 V

Pin No.	Symbol	I/O	Name
C1	IN0	I	External Input0
C2	IN2	I	External Input2
C3	IN4	I	External Input4
C4	IOG	-	I/O power supply −
C5	OUT0	O	External Output0
C6	OUT2	O	External Output2
C7	OUT4	O	External Output4
C8	V_O	I	External Output Power Supply

Pin No.	Symbol	I/O	Name
D1	IN1	I	External Input1
D2	IN3	I	External Input3
D3	IN5	I	External Input5
D4	IOG	-	I/O power supply −
D5	OUT1	O	External Output1
D6	OUT3	O	External Output3
D7	OUT5	O	External Output5
D8	G_O	I	External Output Power Supply

● Wiring Example (NX-CT2320 6ch mode)

Counter Input Wiring Example

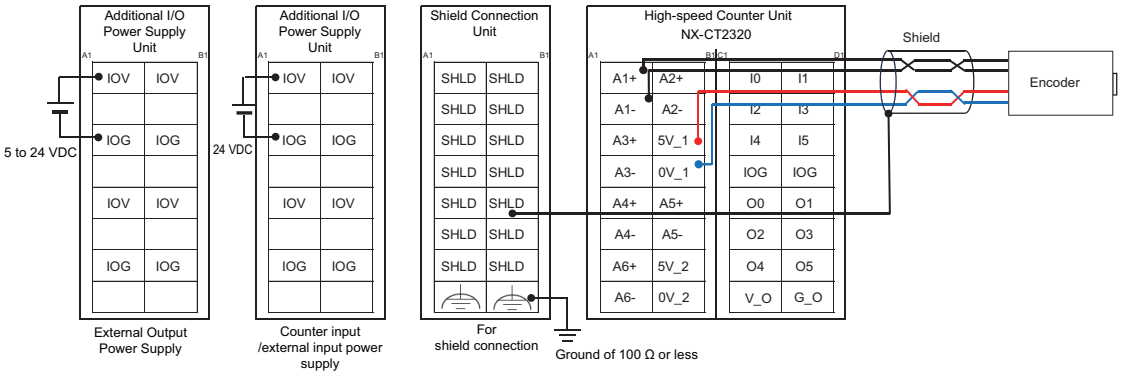

External I/O Wiring Example

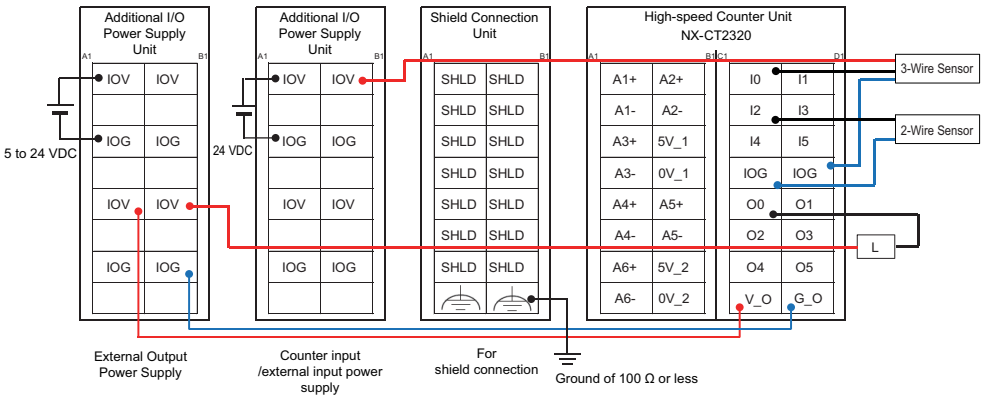

4-4-4 NX-CT2420

Terminal block array and wiring example for NX-CT2420 2ch mode and 6ch mode are shown below. For Counter Input A-phase/B-phase/Z-phase wiring, use a twisted-pair shielded cable with a ground of 100 Ω or less for the shield.

In 2ch Mode

● Terminal Block Arrangement

High-speed Counter Unit
NX-CT2420

A1	B1	C1	D1
A1+	B1+	IN0	IN1
A1-	B1-	IN2	IN3
Z1+	5V_1	IN4	IN5
Z1-	0V_1	IOV	IOV
A2+	B2+	OUT0	OUT1
A2-	B2-	OUT2	OUT3
Z2+	5V_2	OUT4	OUT5
Z2-	0V_2	V_O	G_O
A8	B8	C8	D8

Pin No.	Symbol	I/O	Name
A1	A1+	I	Counter 1 input A-phase +
A2	A1-	I	Counter 1 input A-phase -
A3	Z1+	I	Counter 1 input Z-phase +
A4	Z1-	I	Counter 1 input Z-phase -
A5	A2+	I	Counter 2 input A-phase +
A6	A2-	I	Counter 2 input A-phase -
A7	Z2+	I	Counter 2 input Z-phase +
A8	Z2-	I	Counter 2 input Z-phase -

Pin No.	Symbol	I/O	Name
B1	B1+	I	Counter 1 input B-phase +
B2	B1-	I	Counter 1 input B-phase -
B3	5V_1	O	Encoder power supply output 1, 5 V
B4	0V_1	O	Encoder power supply output 1, 0 V
B5	B2+	I	Counter 2 input B-phase +
B6	B2-	I	Counter 2 input B-phase -
B7	5V_2	O	Encoder power supply output 2, 5 V
B8	0V_2	O	Encoder power supply output 2, 0 V

Pin No.	Symbol	I/O	Name
C1	IN0	I	External Input0
C2	IN2	I	External Input2
C3	IN4	I	External Input4
C4	IOV	-	I/O power supply +
C5	OUT0	O	External Output0
C6	OUT2	O	External Output2
C7	OUT4	O	External Output4
C8	V_O	I	External Output Power Supply

Pin No.	Symbol	I/O	Name
D1	IN1	I	External Input1
D2	IN3	I	External Input3
D3	IN5	I	External Input5
D4	IOV	-	I/O power supply +
D5	OUT1	O	External Output1
D6	OUT3	O	External Output3
D7	OUT5	O	External Output5
D8	G_O	I	External Output Power Supply

● Wiring Example (NX-CT2420 2ch mode)

Counter Input Wiring Example

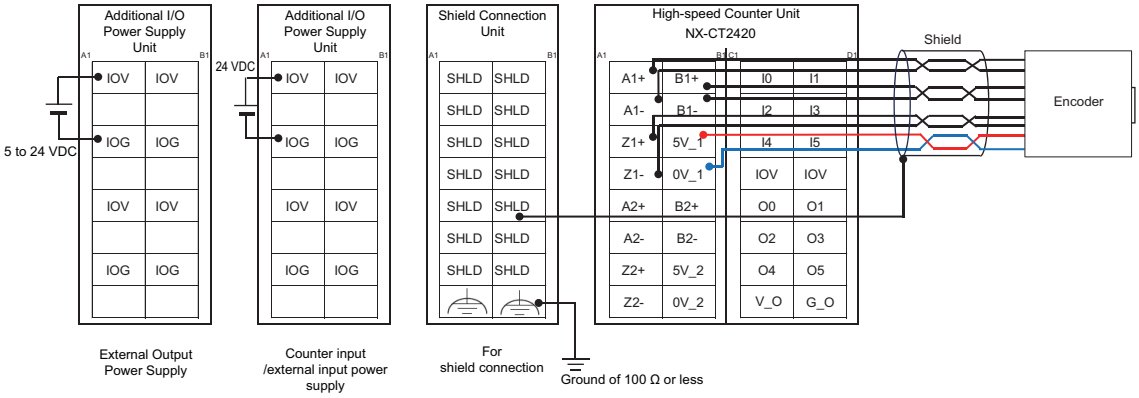

External I/O Wiring Example

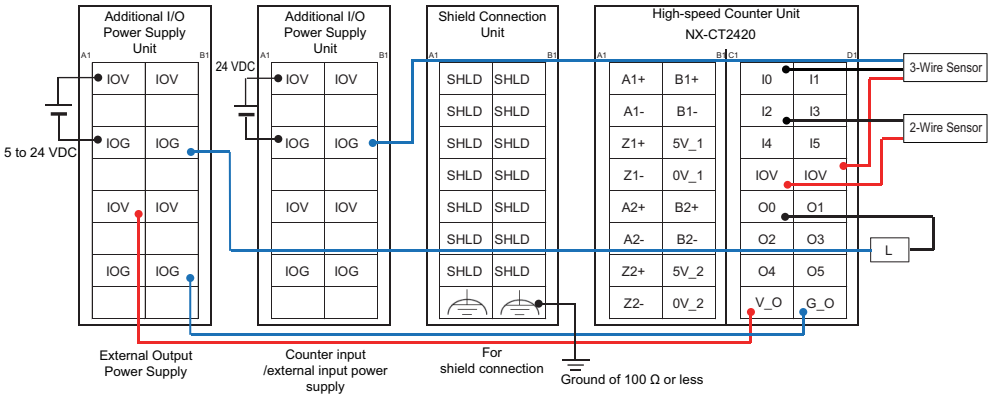

In 6ch Mode

● Terminal Block Arrangement

High-speed Counter Unit
NX-CT2420

A1	B1	C1	D1
A1+	A2+	IN0	IN1
A1-	A2-	IN2	IN3
A3+	5V_1	IN4	IN5
A3-	0V_1	IOV	IOV
A4+	A5+	OUT0	OUT1
A4-	A5-	OUT2	OUT3
A6+	5V_2	OUT4	OUT5
A6-	0V_2	V_O	G_O
A8	B8	C8	D8

Pin No.	Symbol	I/O	Name
A1	A1+	I	Counter 1 input A-phase +
A2	A1-	I	Counter 1 input A-phase -
A3	A3+	I	Counter 3 input A-phase +
A4	A3-	I	Counter 3 input A-phase -
A5	A4+	I	Counter 4 input A-phase +
A6	A4-	I	Counter 4 input A-phase -
A7	A6+	I	Counter 6 input A-phase +
A8	A6-	I	Counter 6 input A-phase -

Pin No.	Symbol	I/O	Name
B1	A2+	I	Counter 2 input A-phase +
B2	A2-	I	Counter 2 input A-phase -
B3	5V_1	O	Encoder power supply output, 5 V
B4	0V_1	O	Encoder power supply output, 0 V
B5	A5+	I	Counter 5 input A-phase +
B6	A5-	I	Counter 5 input A-phase -
B7	5V_2	O	Encoder power supply output, 5 V
B8	0V_2	O	Encoder power supply output, 0 V

Pin No.	Symbol	I/O	Name
C1	IN0	I	External Input0
C2	IN2	I	External Input2
C3	IN4	I	External Input4
C4	IOV	-	I/O power supply +
C5	OUT0	O	External Output0
C6	OUT2	O	External Output2
C7	OUT4	O	External Output4
C8	V_O	I	External Output Power Supply

Pin No.	Symbol	I/O	Name
D1	IN1	I	External Input1
D2	IN3	I	External Input3
D3	IN5	I	External Input5
D4	IOV	-	I/O power supply +
D5	OUT1	O	External Output1
D6	OUT3	O	External Output3
D7	OUT5	O	External Output5
D8	G_O	I	External Output Power Supply

Wiring Example (NX-CT2420 6ch mode)

Counter Input Wiring Example

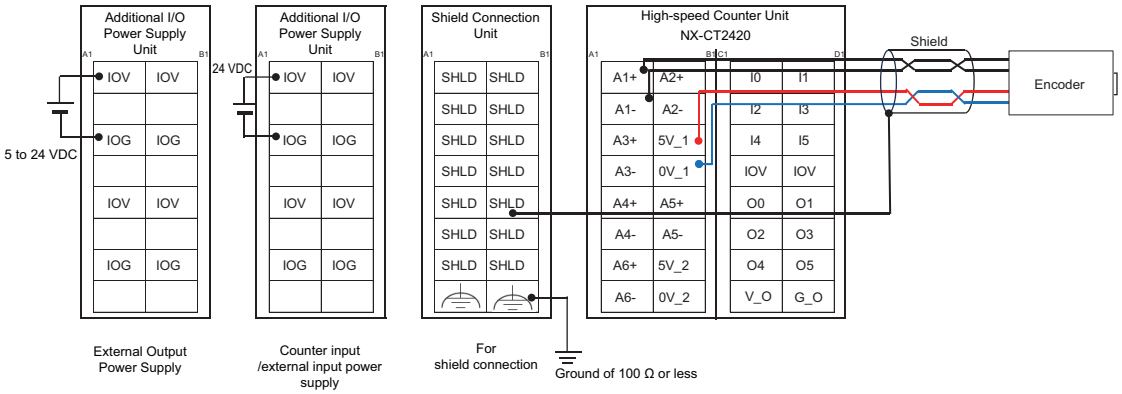

External I/O Wiring Example

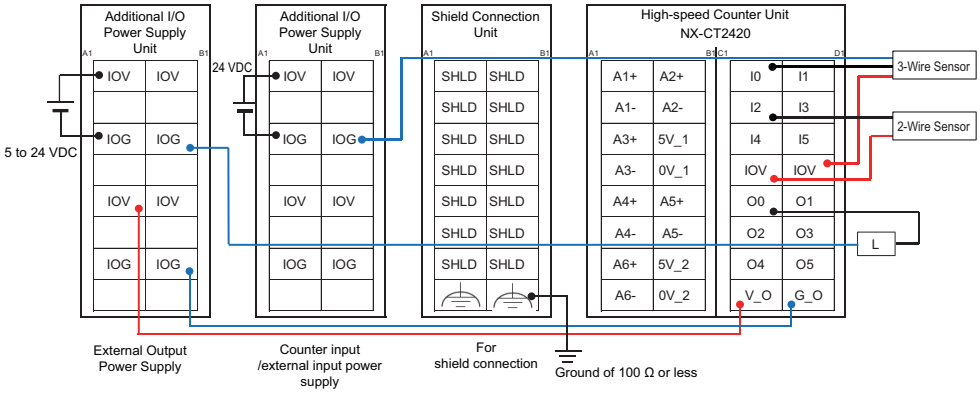

4-5 Precautions for Wiring

This section describes precautions that should be taken when you wire the High-speed Counter Units.

- Precautions when the Unit is easily affected by noise
- Precautions when connecting a two-wire DC sensor

4-5-1 When Prone to the Effects of Noise

Electronic control equipment may malfunction due to noise from surrounding power supply lines and external loads.
Malfunctions due to noise are difficult to reproduce, and it can take some time to determine what the cause of the problem is. Observe the following precautions to prevent noise-related malfunctions and to increase the reliability of your system.

- Use the correct diameters of wires and cables according to the documentation for encoders and other equipment.
  Wire power lines (AC power supply lines and motor power lines) separately from control lines (pulse input lines and external I/O signal lines). Never place these wires in the same duct or bundle them together.
- Do not share the power supply for the counter input/external I/O of a High-speed Counter Unit with power supply for another Unit.
  The counter input/external input power supply is connected to the I/O power supply terminals on the other NX Units in the CPU Rack or Slave Terminal through the NX bus connectors. If a CPU Rack or Slave Terminal contains one or more High-speed Counter Units together with one or more other Units, use an Additional I/O Power Supply Unit to separate the I/O power supply.

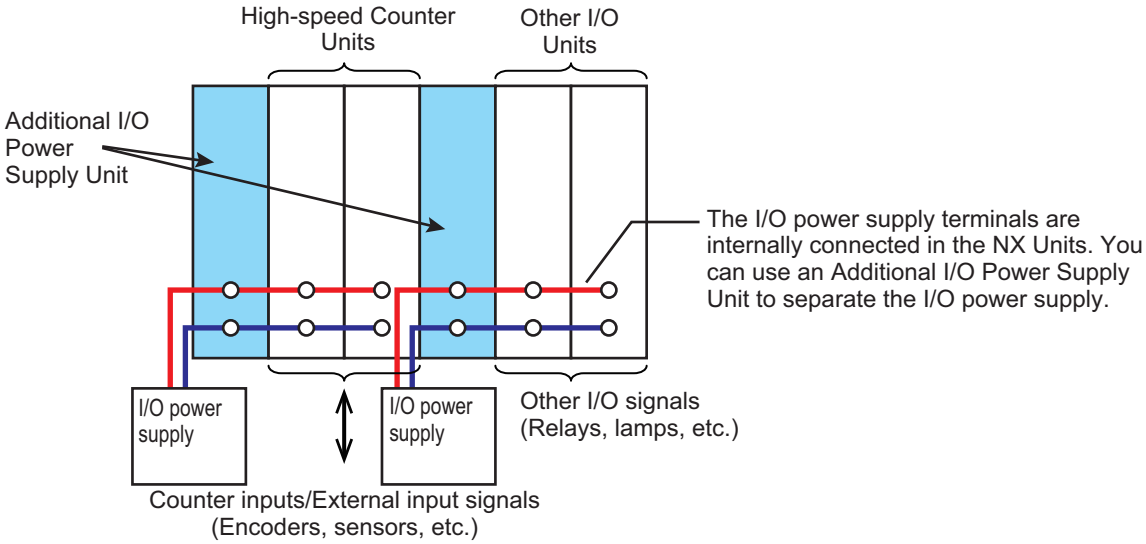

- For line receiver input type Counter Input A-phase/B-phase/Z-phase wiring, use a twisted-pair shielded cable.
- For Counter Input A-phase/B-phase/Z-phase wiring, use a shielded cable with a ground of 100 Ω or less for the shield.
- For external output, always install a surge absorber on an inductive load (relay or solenoid).

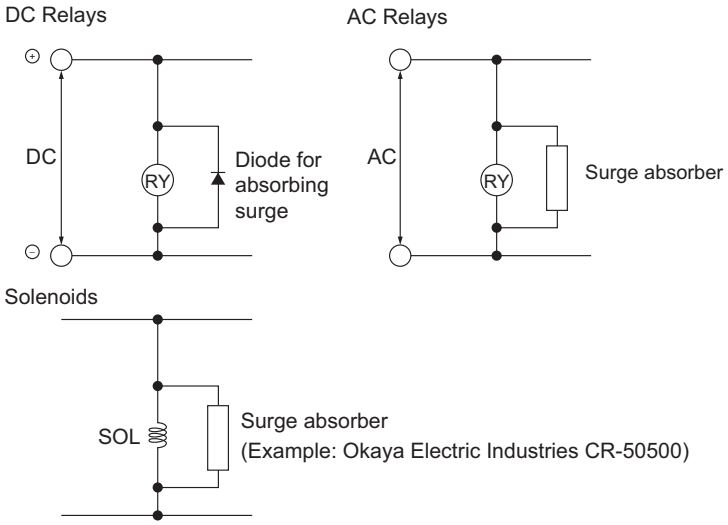

Additional Information

- Place the diode for absorbing surge or surge absorber next to the relay. Use a diode for absorbing surge that can withstand at least 5 times the circuit voltage.
- Noise on the power supply line may affect operation if you also use the same power supply to power an electrical welder or electric discharge machine, or if there is any source of high-frequency noise nearby. In this case, insert a noise filter into the power supply input section.
- Ground to 100 Ω or less and use as thick a wire as possible, larger than 1.25 mm^2.

4-5-2 Precautions When Connecting a Two-wire DC Sensor

When a two-wire sensor is used with the external inputs of the High-speed Counter Units, check that the following conditions are met. Failure to meet these conditions may result in operating errors.

Relation between ON Voltage at External Inputs and Sensor Residual Voltage

The external inputs of the High-speed Counter Units can detect sensor output ON only when the following conditions are satisfied:

$V_{ON} \leq V_{CC} - V_R$

The voltages related to the conditions for NPN type sensors are shown in the figure below.

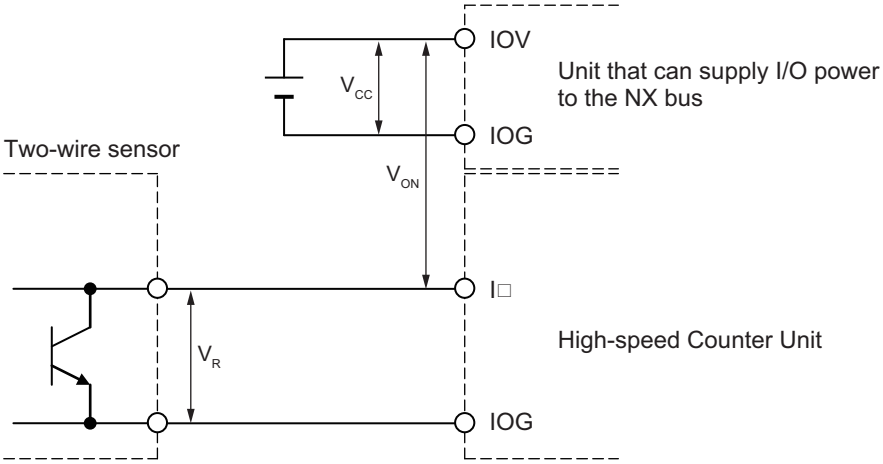

The voltages related to the conditions for PNP type sensors are shown in the figure below.

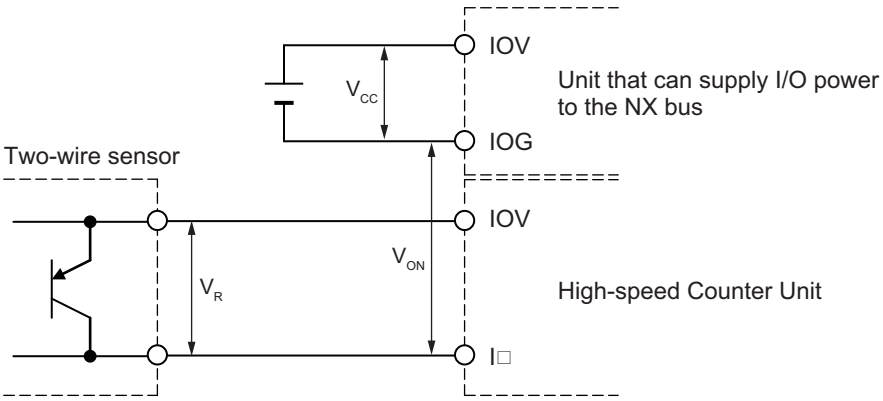

V_{CC}: Power supply voltage

V_R: Sensor's output residual voltage

V_{ON}: ON voltage at external input of the High-speed Counter Unit

Relation between Input Current at External Input Terminals and Sensor Control Output (Load Current)

The trigger inputs of the High-speed Counter Units can detect sensor output ON only when the following conditions are satisfied:

I_{OUT} (min) ≤ I_{in} ≤ I_{OUT} (max)

I_{OUT} (min): Minimum value of load current

I_{OUT} (max): Maximum value of load current

Use the following equation to calculate the input current:

$I_{in} = I_{ON}$

Note At the external input terminals of the High-speed Counter Units, the input current does not increase linearly for the input voltage. If you gradually raise the input voltage and once the input current reaches I_{ON}, the input current does not increase any further, and remains roughly constant even when the input voltage is raised.

When I_{in} is smaller than I_{OUT} (min), connect a bleeder resistor R. The bleeder resistor constant can be calculated as follows: Select an appropriate bleeder resistor R so that both equations can be satisfied.

$R \leq (V_{CC} - V_R)/(I_{OUT}\text{ (min.)} - I_{ON})$

Rated power W of bleeder resistor ≥ $(V_{CC} - V_R)^2/R \times 4$ [allowable margin]

The voltages and currents related to the conditions for NPN type sensors are shown in the figure below.

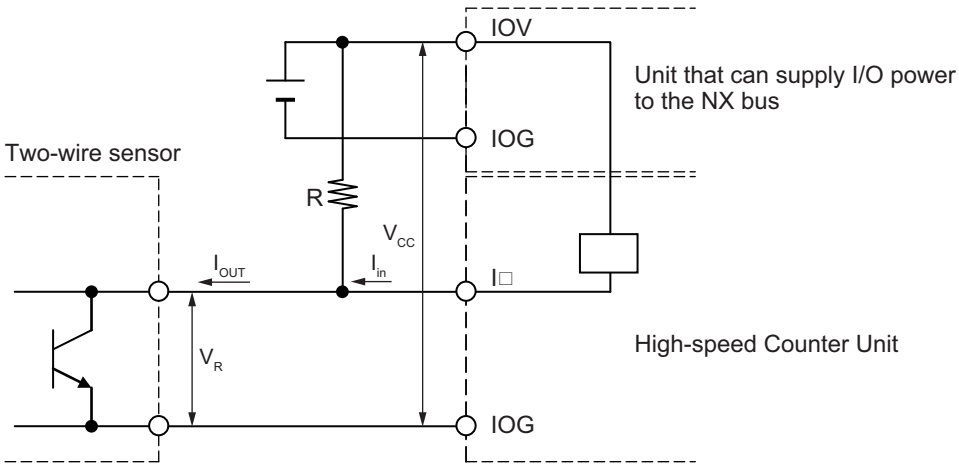

The voltages and currents related to the conditions for PNP type sensors are shown in the figure below.

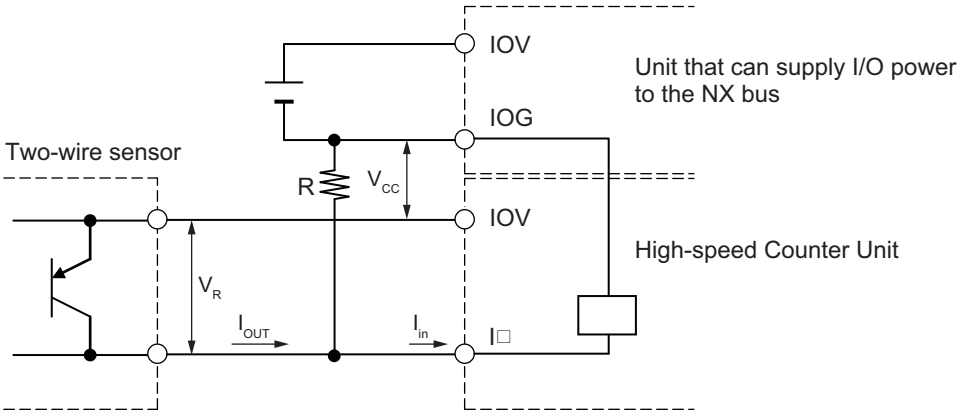

V_{CC}: Power supply voltage

V_R: Sensor's output residual voltage

I_{OUT}: Sensor control output (load current)

I_{ON}: Input current at external input terminal of the High-speed Counter Unit (Input current when the rated voltage is applied)

R: Bleeder resistor

Relation between OFF Current at External Inputs and Sensor Leakage Current

The external inputs of the High-speed Counter Units can detect sensor output OFF only when the following conditions are satisfied:

$I_{OFF} \leq I_{leak}$

When I_{leak} is greater than I_{OFF}, connect a bleeder resistor R.

Use the following equation to calculate the bleeder resistance constant.

$R \leq (V_{OFF}/I_{OFF}) \times V_{OFF}/(I_{leak} \times (V_{OFF}/I_{OFF}) - V_{OFF})$

Use the following equation to calculate the rated power of a bleeder resistor.

Rated power W of bleeder resistor $\geq (V_{CC} - V_R)^2/R \times 4$ [allowable margin]

The voltages and currents related to the conditions for NPN type sensors are shown in the figure below.

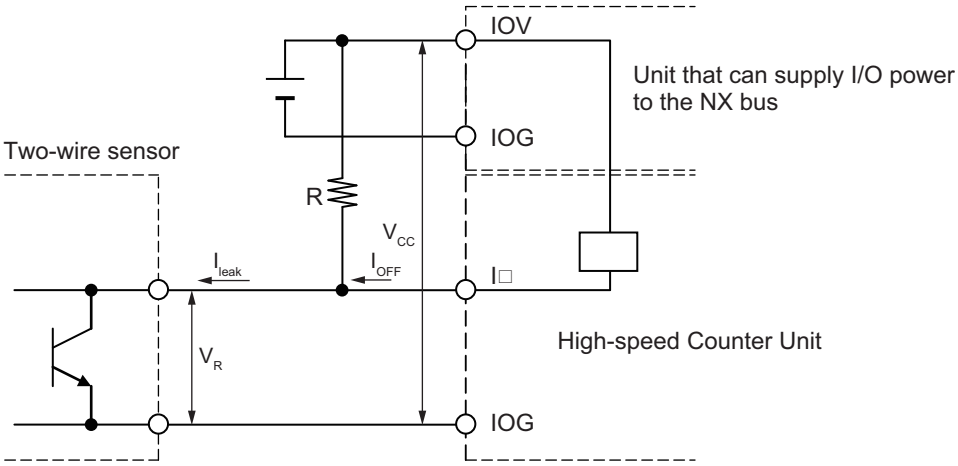

The voltages and currents related to the conditions for PNP type sensors are shown in the figure below.

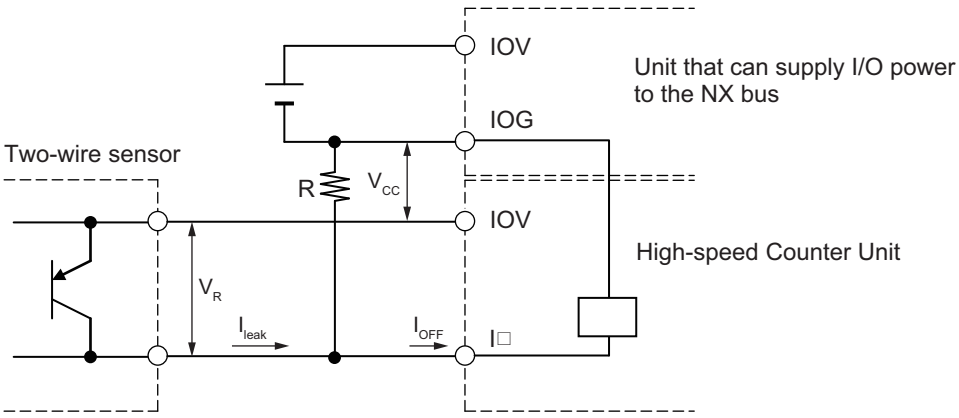

V_{CC}: Power supply voltage

V_R: Sensor's output residual voltage

V_{OFF}: OFF voltage at external input of the High-speed Counter Unit

I_{leak}: Sensor leakage current

R: Bleeder resistor

I_{OFF}: OFF current at external input of the High-speed Counter Unit

Precautions on Sensor Inrush Current

An incorrect input may occur due to sensor inrush current if a sensor is turned ON after the High-speed Counter Unit has started up to the point where inputs are possible.
Determine the time required for sensor operation to stabilize after the sensor is turned ON, and take appropriate measures, such as inserting an ON delay into the user program after turning ON the sensor.

A programming example is shown below.

The sensor's power supply voltage is used as the input bit to *Sensor_power*.
A 100-ms timer delay (the time required for an OMRON Proximity Sensor to stabilize) is created in the user program.
After the timer changes to TRUE, input bit X causes the output *Output* to change to TRUE after the input of the sensor changes to TRUE.

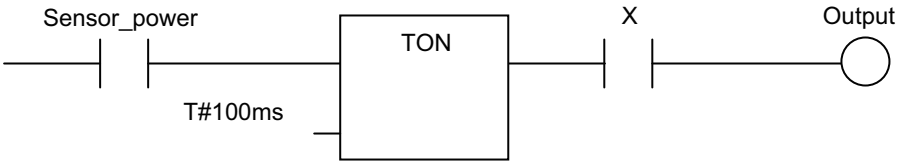

5

I/O Refreshing

This section describes the types and functions of I/O refreshing for the High-speed Counter Units.

5-1 I/O Refreshing 5-2
- 5-1-1 I/O Refreshing from CPU Units to NX Units 5-2
- 5-1-2 I/O Refreshing from CPU Units or Industrial PCs to Slave Terminal 5-3
- 5-1-3 Calculating the I/O Response Times of NX Units 5-5

5-2 I/O Refreshing Methods 5-6
- 5-2-1 Types of I/O Refreshing Methods 5-6
- 5-2-2 Setting the I/O Refreshing Methods 5-8
- 5-2-3 Restrictions in Refresh Cycles 5-9
- 5-2-4 Operation of Free-Run Refreshing 5-9
- 5-2-5 Operation of Synchronous I/O Refreshing 5-10
- 5-2-6 Operation of Task Period Prioritized Refreshing 5-15

5-1 I/O Refreshing

This section describes I/O refreshing for NX Units.

5-1-1 I/O Refreshing from CPU Units to NX Units

An NX-series CPU Unit cyclically performs I/O refreshing with the NX Units.

The following period and two cycles affect operation of the I/O refreshing between the CPU Unit and the NX Units.

a. Primary period in CPU Unit
b. Refresh cycle of the NX bus
c. Refresh cycle of each NX Unit

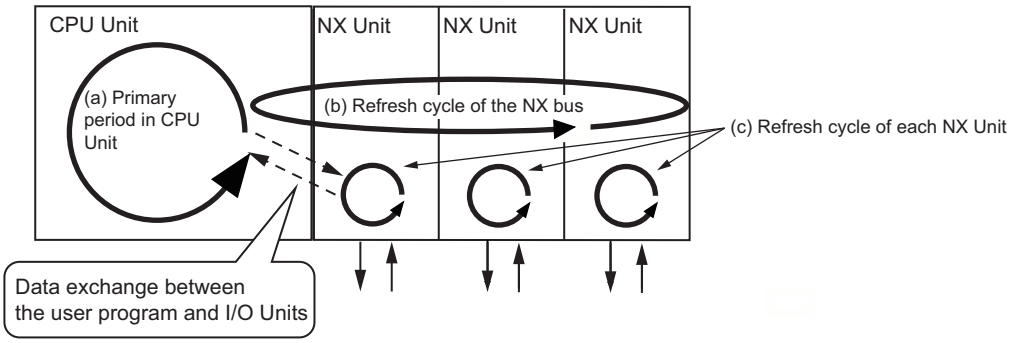

The following operation occurs.

- The refresh cycle of the NX bus in item (b) is automatically synchronized with the primary period of the CPU Unit in item (a).
- The refresh cycle of each NX Unit in item (c) depends on the I/O refreshing method which is given below.

Refer to the *NJ/NX-series CPU Unit Software User's Manual (Cat. No. W501)* for detailed information on I/O refreshing between the CPU Unit and the NX Units.
Refer to *5-1-3 Calculating the I/O Response Times of NX Units* on page 5-5 for the I/O response times of NX Units in the CPU Rack of the CPU Unit.

5-1-2 I/O Refreshing from CPU Units or Industrial PCs to Slave Terminal

The CPU Unit or the Industrial PC cyclically performs I/O refreshing with the Slave Terminal through the Communications Master Unit and the Communications Coupler Unit.

The following four cycles affect operation of the I/O refreshing between the NX Unit on a Slave Terminal and the CPU Unit or Industrial PC.

a. Cycle time of the CPU Unit or Industrial PC
b. Communications cycle of the host network
c. Refresh cycle of the NX bus
d. Refresh cycle of each NX Unit

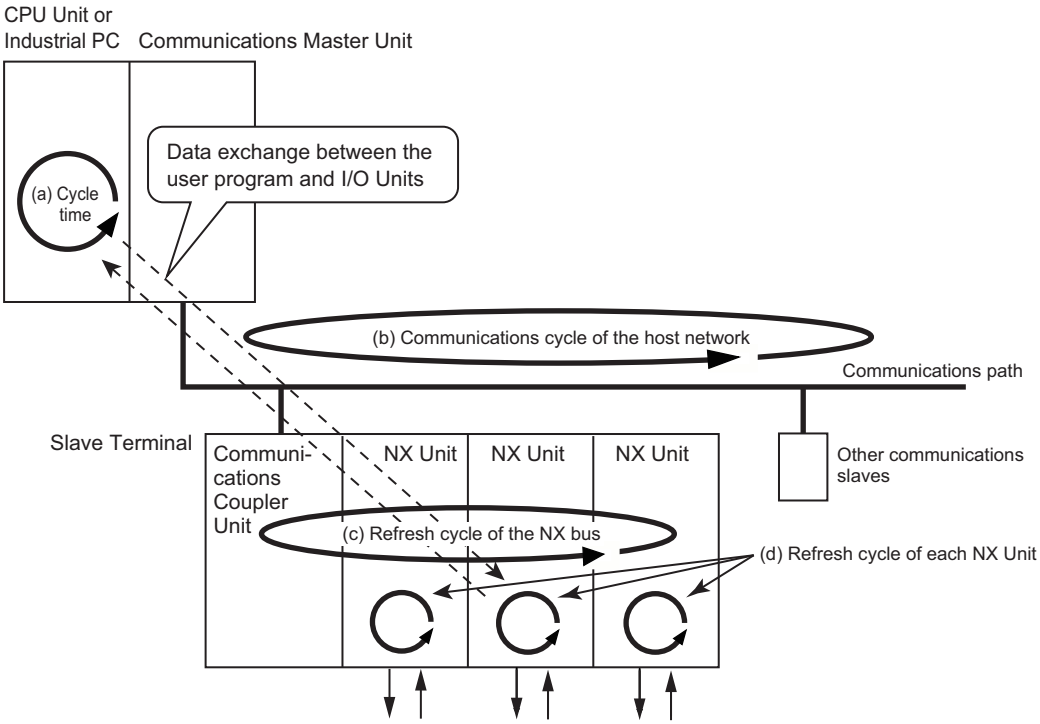

The cycle time of the CPU Unit or Industrial PC and communications cycle of the host network and the I/O refresh cycle of the NX bus are determined by the CPU Unit or Industrial PC types and the communications types.
The following explains operations when the built-in EtherCAT port on the NJ/NX-series CPU Unit or NY-series Industrial PC is used for communications with an EtherCAT Slave Terminal, with symbols in the figure.

Refer to the user's manual for the connected Communications Coupler Unit for details on the operation of I/O refreshing on Slave Terminals other than EtherCAT Slave Terminals.
Refer to the *NX-series EtherCAT Coupler Unit User's Manual (Cat. No. W519)* for detailed information on I/O refreshing between the built-in EtherCAT port and EtherCAT Slave Terminals.
In addition, refer to *5-1-3 Calculating the I/O Response Times of NX Units* on page 5-5 for the I/O response time of NX Units on Slave Terminals.

Operation of I/O Refreshing with NX-series CPU Units

The following shows the operation of I/O refreshing when the built-in EtherCAT port on the NX-series CPU Unit is used for communications with an EtherCAT Slave Terminal.

- The process data communications cycle in item (b) and the refresh cycle of the NX bus in item (c) are automatically synchronized with the primary period or the task period of the priority-5 periodic task of the CPU Unit in item (a). *1
- The refresh cycle of each NX Unit in item (d) depends on the I/O refreshing method which is given below.

*1. This applies when the distributed clock is enabled in the EtherCAT Coupler Unit.

The priority-5 periodic tasks must be supported by the connected CPU Unit model. Refer to descriptions of designing tasks in the *NJ/NX-series CPU Unit Software User's Manual (Cat. No. W501)* for information on the periodic tasks supported by each NX-series CPU Unit model.

Operation of I/O Refreshing with NJ-series CPU Units or NY-series Industrial PCs

The following shows the operation of I/O refreshing when the built-in EtherCAT port on the NJ-series CPU Unit or NY-series Industrial PC is used for communications with an EtherCAT Slave Terminal.

- The process data communications cycle in item (b) and the refresh cycle of the NX bus in item (c) are automatically synchronized with the primary period of the CPU Unit or Industrial PC in item (a). *1
- The refresh cycle of each NX Unit in item (d) depends on the I/O refreshing method which is given below.

*1. This applies when the distributed clock is enabled in the EtherCAT Coupler Unit.

5-1-3 Calculating the I/O Response Times of NX Units

Depending on where the NX Unit is connected, refer to the following manuals to calculate the I/O response times of an NX Unit.

Connected to a CPU Unit

Manual for reference	Description
Software user's manual for the connected CPU Unit	The method for calculating the I/O response times of NX Units in the CPU Rack with a CPU Unit is described.
NX-series Data Reference Manual	The NX Unit parameter values used for calculating the I/O response times of NX Units are described.

Connected to a Communications Coupler Unit

Manual for reference	Description
User's manual for the connected Communications Coupler Unit	The method for calculating the I/O response times of NX Units on Slave Terminals is described.
NX-series Data Reference Manual	The NX Unit parameter values used for calculating the I/O response times of NX Units are described.

5-2 I/O Refreshing Methods

This section describes I/O refreshing for the High-speed Counter Units.

5-2-1 Types of I/O Refreshing Methods

Methods of I/O Refreshing between the CPU Unit and NX Units

The I/O refreshing methods that you can use between the CPU Unit and the NX Units depend on the connected CPU Unit.
Refer to the software user's manual for the connected CPU Unit for information on the I/O refreshing methods that you can use between the CPU Unit and the NX Units.

As an example, the I/O refreshing methods that you can use between the NX-series NX1P2 CPU Unit and the NX Units are shown below.

For the High-speed Counter Unit, synchronous I/O refreshing is always used.

I/O refreshing method *1	Outline of operation
Synchronous I/O refreshing	With this I/O refreshing method, the timing to read inputs or to refresh outputs is synchronized on a fixed interval between more than one NX Unit connected to a CPU Unit.

*1. Task period prioritized refreshing cannot be used for the NX1P2 CPU Unit.

Since the NX1P2 CPU Unit can execute all the above I/O refreshing methods at the same time, you can use NX Units with different I/O refreshing methods together.

Methods of I/O Refreshing between the Communications Coupler Unit and NX Units

The I/O refreshing methods that you can use between the Communications Coupler Unit and the NX Units depend on the Communications Coupler Unit that is used.
Refer to the user's manual for the connected Communications Coupler Unit for information on the I/O refreshing methods that you can use between the Communications Coupler Unit and the NX Units.

As an example, when an EtherCAT Coupler Unit is connected to the built-in EtherCAT port on an NJ/NX-series CPU Unit or NY-series Industrial PC, the I/O refreshing methods that you can use between the EtherCAT Coupler Unit and the NX Units are shown below.

I/O refreshing method	Outline of operation
Free-Run refreshing	With this I/O refreshing method, the refresh cycle of the NX bus and the I/O refresh cycles of the NX Units are asynchronous.
Synchronous I/O refreshing	With this I/O refreshing method, the timing to read inputs or to refresh outputs is synchronous on a fixed interval between more than one NX Unit on more than one Slave Terminal.
Task period prioritized refreshing *1	With this I/O refreshing method, shortening the task period is given priority over synchronizing the I/O timing with other NX Units. With this I/O refreshing method, the timing of I/O is not consistent with the timing of I/O for NX Units that use synchronous I/O refreshing.

*1. An NX-ECC203 EtherCAT Coupler Unit is required to use task period prioritized refreshing.

Since the EtherCAT Coupler Unit can execute all I/O refreshing methods at the same time, you can use NX Units with different I/O refreshing methods together in the EtherCAT Slave Terminal.

Additional Information

The EtherCAT Slave Terminals with enabled distributed clocks and all EtherCAT slaves that support DC synchronization execute I/O processing based on Sync0, which is shared on the EtherCAT network. However, because the specifications and performance for the timing to read inputs or to refresh outputs for EtherCAT slaves and NX Units are different, the timing to read inputs or to refresh outputs is not simultaneous.

5-2-2 Setting the I/O Refreshing Methods

Setting Methods between the CPU Unit and the NX Units

How to set an I/O refreshing method between the CPU Unit and the NX Units is determined by the connected CPU Unit.
Refer to descriptions of I/O refreshing methods in the software user's manual for the connected CPU Unit for information on the setting method for I/O refreshing between the CPU Unit and the NX Units.

An example of the setting operation for the NX-series NX102 CPU Unit is shown below.
For the NX102 CPU Unit, no setting operation is required, and the method is determined according to the following table.

NX Units that support only Free-Run refreshing	NX Units that support only synchronous I/O refreshing	NX Units that support both Free-Run refreshing and synchronous I/O refreshing	NX Units that support Free-Run refreshing, synchronous I/O refreshing, and task period prioritized refreshing	NX Units that support only time stamp refreshing*1
Free-Run refreshing	Synchronous I/O refreshing			Time stamp refreshing

*1. Two types of time stamp refreshing are available: one is input refreshing with input changed time and the other is output refreshing with specified time stamp.

Because the High-speed Counter Units are "NX Units that support Free-Run refreshing, synchronous I/O refreshing, and task period prioritized refreshing", so they operate using synchronous I/O refreshing.

Setting Methods between the Communications Coupler Unit and the NX Units

How to set an I/O refreshing method between the Communications Coupler Unit and the NX Units is determined by the connected Communications Coupler Unit.
Refer to the user's manual for the connected Communications Coupler Unit for information on how to set an I/O refreshing method between the Communications Coupler Unit and the NX Units.

An example when the EtherCAT Coupler Unit is connected to the built-in EtherCAT port on an NJ/NX-series CPU Unit or NY-series Industrial PC is shown below.
The I/O refreshing method between the EtherCAT Coupler Unit and each NX Unit depends on whether the DC is enabled in the EtherCAT Coupler Unit.

DC enable setting in the EtherCAT Coupler Unit	High-speed Counter Unit
Enabled (DC for synchronization)	Synchronous I/O refreshing
Enabled (DC with priority in cycle time)	Task period prioritized refreshing *1
Disabled (FreeRun)	Free-Run refreshing

*1. A High-speed Counter Unit and an NX-ECC203 EtherCAT Coupler Unit are required to use task period prioritized refreshing.

5-2-3 Restrictions in Refresh Cycles

The following table lists the restrictions in the refresh cycles for Free-Run refreshing, synchronous I/O refreshing, and task period prioritized refreshing for the High-speed Counter Units.

I/O refreshing method	Refresh cycle
Free-Run Refreshing	250 μs fixed
Synchronous I/O refreshing*1	250 μs to 10 ms*2
Task period prioritized refreshing*1*3	250 μs to 10 ms

*1. The refresh cycle depends on the specifications of the EtherCAT master and EtherCAT Coupler Unit. It also depends on the Unit configuration.
*2. When it is combined with the NX-ECC201, NX-ECC202, or NX-ECC203, the refresh cycle is 500 μs to 4 ms.
*3. A High-speed Counter Units and an NX-ECC203 EtherCAT Coupler Unit are required.

Precautions for Correct Use

If you use synchronous I/O refreshing or task period prioritized refreshing, set the task periods of the periodic tasks as follows.
- Less than or equal to the refresh cycle of the High-speed Counter Units
- A value longer than the NX bus refresh cycle that is automatically calculated by the Support Software

Also refer to the user's manual for the connected CPU Unit or EtherCAT Coupler Unit for information on setting the task periods of periodic tasks.

5-2-4 Operation of Free-Run Refreshing

With Free-Run refreshing, the NX bus refresh cycle and the NX Unit I/O refresh cycle operate asynchronously. For High-speed Counter Units, this is the refreshing method for when connected with a Slave Terminal.

Free-Run refreshing for a High-speed Counter Unit operates as follows:
- The Communications Coupler Unit performs I/O refreshing for NX Units. (Refer to (a) in the figure below.)
- The High-speed Counter Unit is not synchronized with NX bus I/O refreshing; it refreshes inputs at a 250 μs cycle. The Communications Coupler Unit reads the most recent input values when I/O refreshing. (Refer to (b) and (c) in the figure below.)
- The High-speed Counter Unit reads the most recent output value at a 250 μs cycle, without synchronizing the updated output values on the I/O refresh timing with the NX bus I/O refresh timing. (Refer to (b) and (c) in the figure below.)
- When the I/O is refreshed, the Communications Coupler Unit reads the most recent input values and the NX Units control the outputs with the most recent output values. (Refer to (c) and (d) in the figure below.)
- Within the same Slave Terminal, the timing of reading inputs and updating outputs is not the same for all of the NX Units. (Refer to (e) in the figure below.)
- The I/O refreshing interval changes according to the processing conditions of the Communications Coupler Unit and host communications master. Therefore, the interval of the timing to read inputs or to refresh outputs for NX Unit is not always the same. (Refer to (f) in the figure below.)

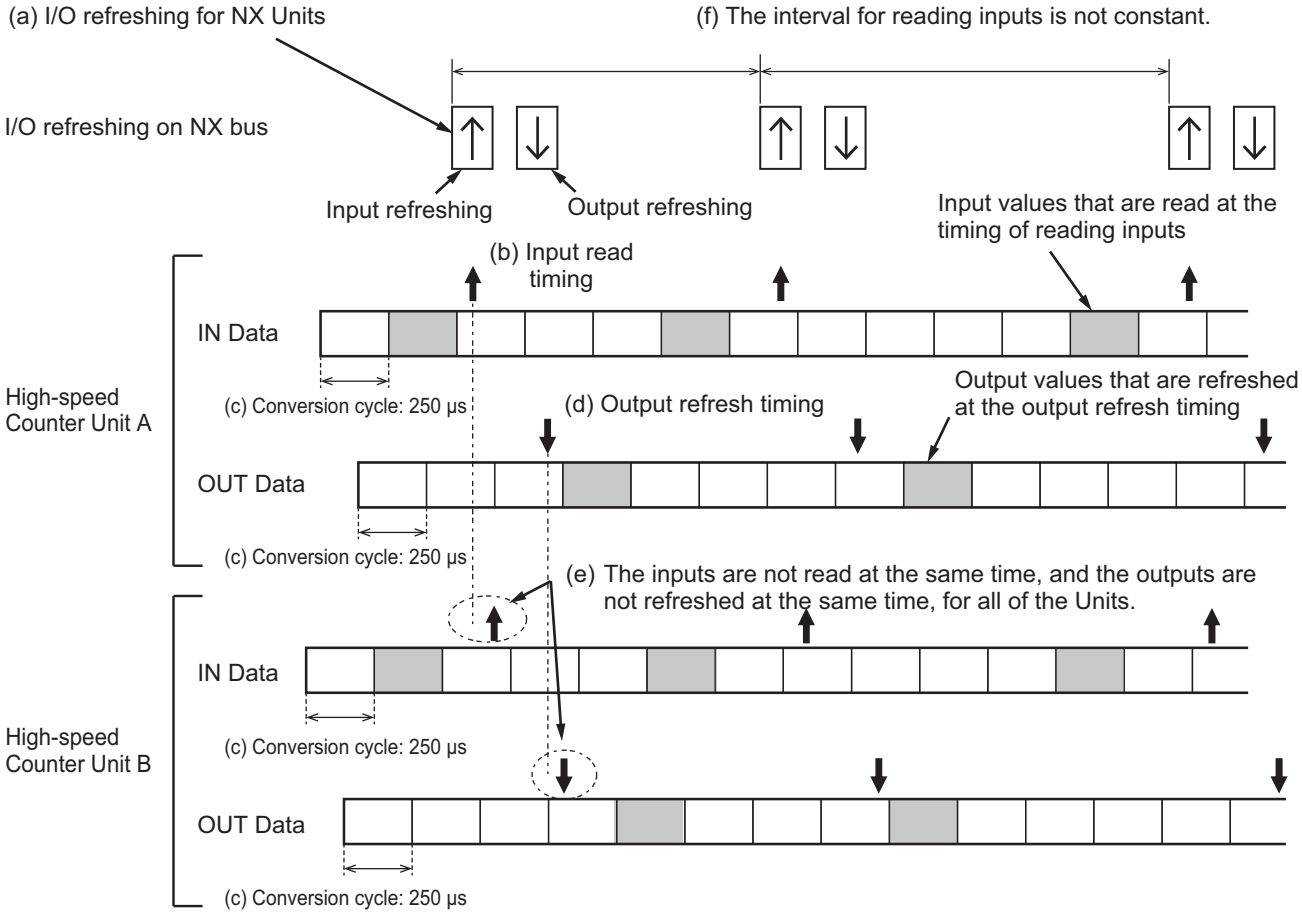

5-2-5 Operation of Synchronous I/O Refreshing

Synchronous I/O refreshing is the following I/O refreshing method. For High-speed Counter Units, this is the refreshing method for when they are connected to a CPU Unit or in an EtherCAT Slave Terminal.

- The timing to read inputs or to refresh outputs between more than one NX Unit connected to a CPU Unit is synchronized and the interval is fixed.
- The timing to read inputs or to refresh outputs between more than one NX Unit on more than one Slave Terminal is synchronized and the interval is fixed.

This section describes the operations of synchronous input refreshing and synchronous output refreshing.

Operation of Synchronous Input Refreshing

● CPU Unit operation

This section describes the operation for synchronous input refreshing methods between the NX-series CPU Unit and NX Units.

- All of the NX Units that are connected to a CPU Unit and that operate with synchronous input refreshing read inputs at a fixed interval based on the synchronization timing. (Refer to (a) in the figure below.)
- The CPU Unit reads the values that are read by the Units on the input read timing during the next I/O refresh. (Refer to (b) in the figure below.)

- The I/O refreshing interval changes according to the processing conditions of the CPU Unit (refer to (c) in the figure below), so the input read timing interval is constant. (Refer to (d) and (e) in the figure below.)
- The timing of reading inputs, the synchronization timing, and the maximum NX bus I/O refresh cycle are automatically calculated by the Sysmac Studio according to the input refresh cycles of the NX Units on the CPU Unit when the CPU Unit is configured and set up.

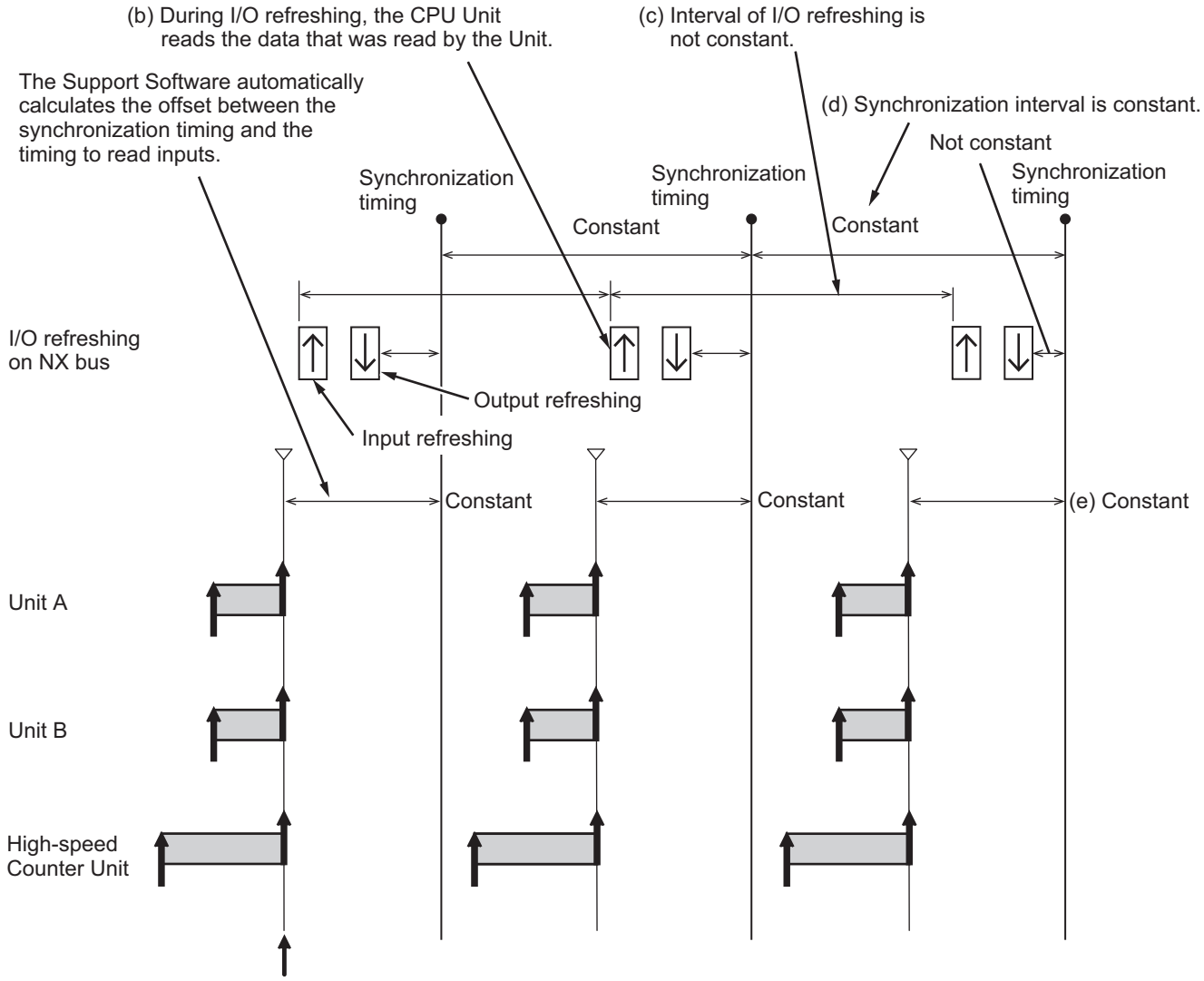

(a) All Input Units that operate with synchronous input refreshing read their inputs at the same time.

● Slave Terminal Operation

This section describes the synchronous input refreshing method for EtherCAT Slave Terminals connected to built-in EtherCAT ports.

- The NX Units that operate with synchronous input refreshing in a Slave Terminal read inputs at a fixed interval based on Sync0. (Refer to (a) in the figure below.)
  Refer to the *NX-series EtherCAT Coupler Unit User's Manual (Cat. No. W519)* for information on the Slave Terminals that operate with the same timing when more than one Slave Terminal is placed on the same EtherCAT network.
- The Communications Coupler Unit reads the values that are read by the Units on the input read timing during the next I/O refresh. (Refer to (b) in the figure below.)

- The I/O refreshing interval changes according to the processing conditions of the Communications Coupler Unit and host communications master (refer to (c) in the figure below), so the input read timing interval is constant. (Refer to (d) and (e) in the figure below.)
- The timing of reading inputs, Sync0, and the maximum NX bus I/O refresh cycle for multiple Slave Terminals are automatically calculated by the Sysmac Studio according to the input refresh cycles of the NX Units in the Slave Terminals when the Slave Terminals are configured and set up.

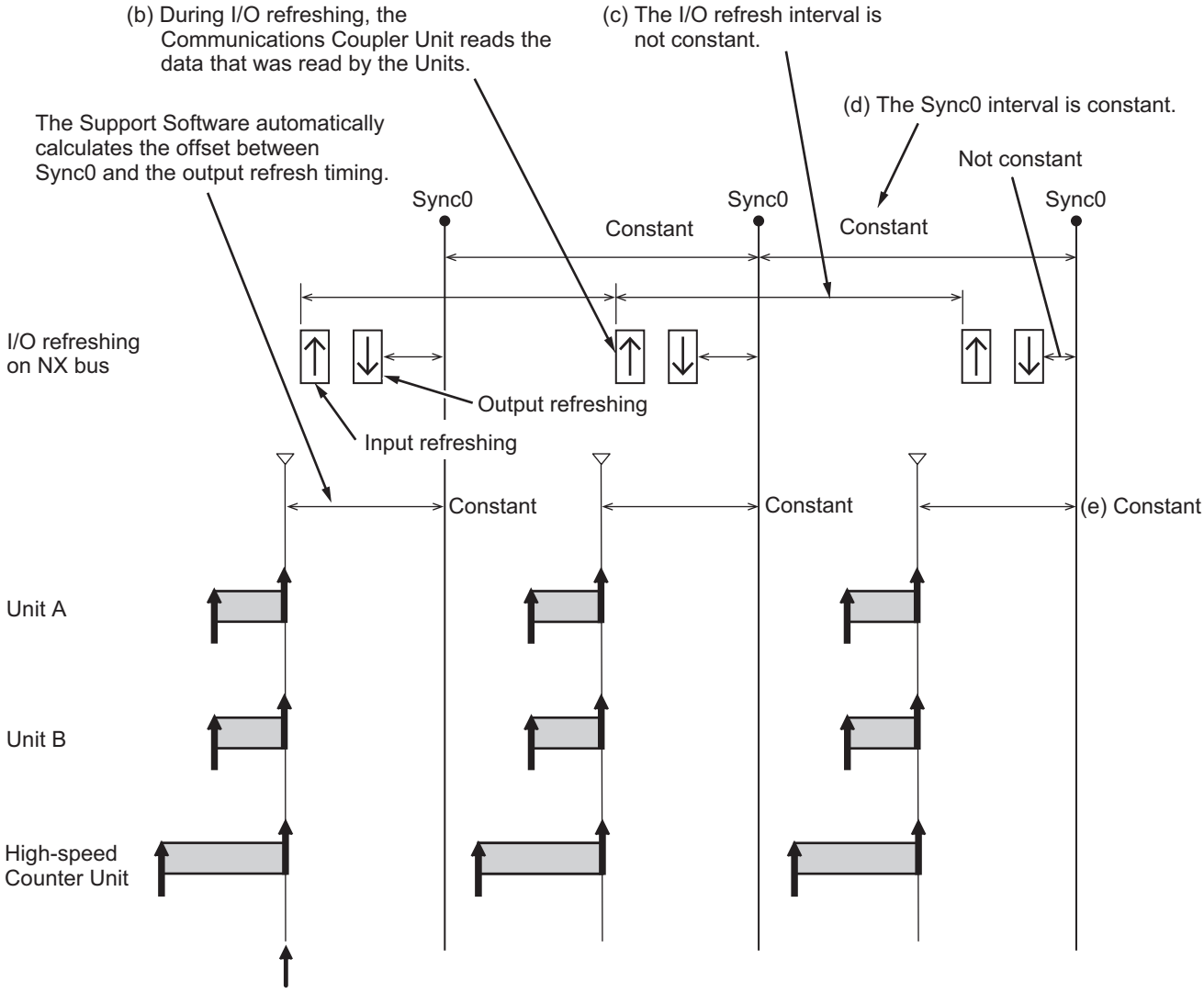

(a) All Input Units that support synchronous input refreshing read their inputs simultaneously.

Precautions for Correct Use

The NX bus refresh cycle is automatically set to agree with the task period of the primary period task or priority-5 periodic task, but the task period is not set automatically. Set the task period to a value that is greater than the refresh cycle of the NX bus that is calculated by the Sysmac Studio. Refer to the software user's manual for the connected CPU Unit or to the user's manual for the connected EtherCAT Coupler Unit for details on setting the task period for periodic tasks.

Operation of Synchronous Output Refreshing

● CPU Unit operation

This section describes the operation for synchronous output refreshing methods between the NX-series CPU Unit and the NX Units.

- All the NX Units that are connected to a CPU Unit and that operate with synchronous output refreshing refresh their outputs at a fixed interval based on the synchronization timing. (Refer to (a) in the figure below.)
- The CPU Unit refreshes the values of the outputs during I/O refreshing. (Refer to (b) in the figure below.)
- The I/O refreshing interval changes according to the processing conditions of the CPU Unit (refer to (c) in the figure below), so the output refresh interval is constant. (Refer to (d) and (e) in the figure below.)
- The timing of refreshing outputs, the synchronization timing, and the maximum NX bus I/O refresh cycle are automatically calculated by the Sysmac Studio according to the output refresh cycles of the NX Units on the CPU Unit when the CPU Unit is configured and set up.

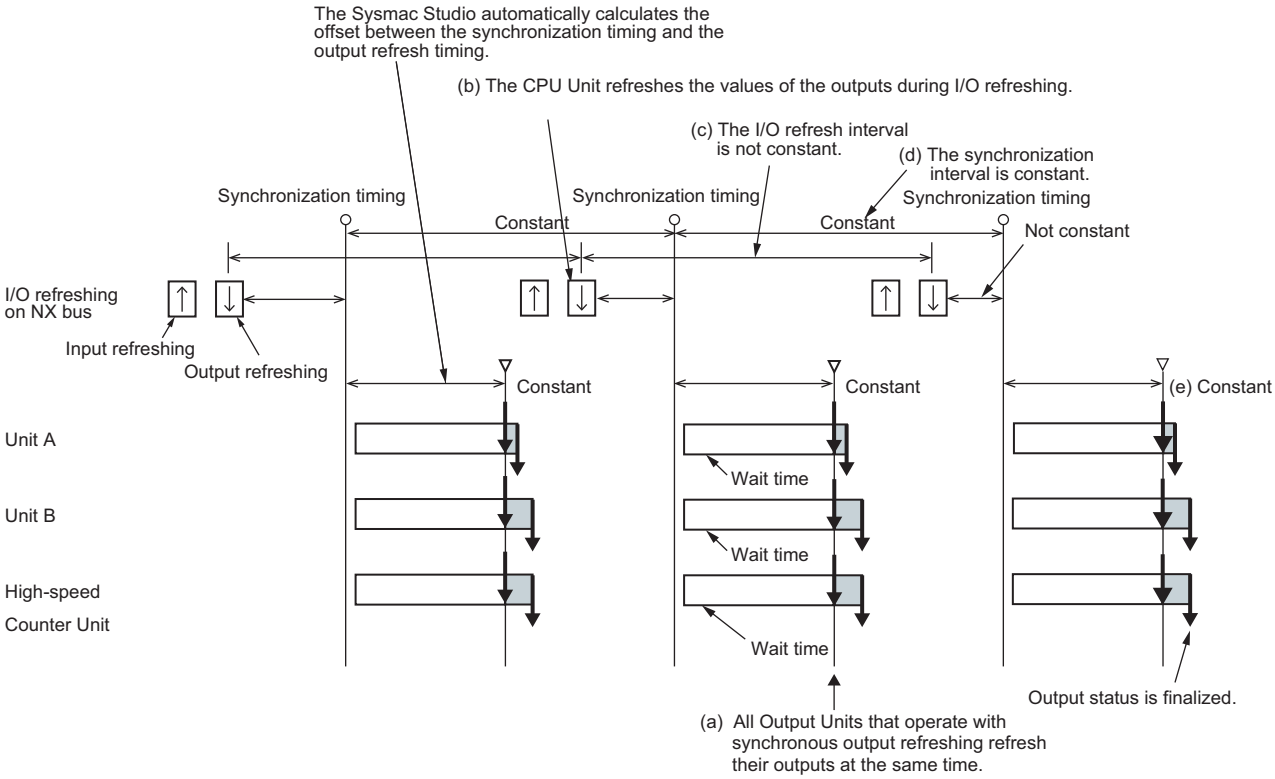

● Slave Terminal Operation

This section describes the synchronous output refreshing method for EtherCAT Slave Terminals connected to built-in EtherCAT ports.

- The NX Units that operate with synchronous output refreshing in a Slave Terminal refresh their outputs at a fixed interval based on Sync0. (Refer to (a) in the figure below.)
  Refer to the *NX-series EtherCAT Coupler Unit User's Manual (Cat. No. W519)* for information on the Slave Terminals that operate with the same timing when more than one Slave Terminal is placed on the same EtherCAT network.

- The Communications Coupler Unit refreshes the values of the output during I/O refreshing. (Refer to (b) in the figure below.)
- The I/O refreshing interval changes according to the processing conditions of the Communications Coupler Unit and host communications master (refer to (c) in the figure below), so the output refresh interval is constant. (Refer to (d) and (e) in the figure below.)
- The timing of refreshing outputs, Sync0, and the maximum NX bus I/O refresh cycle of the Slave Terminals are automatically calculated by the Sysmac Studio according to the output refresh cycle of the NX Units in the Slave Terminals when the Slave Terminals are configured and set up.

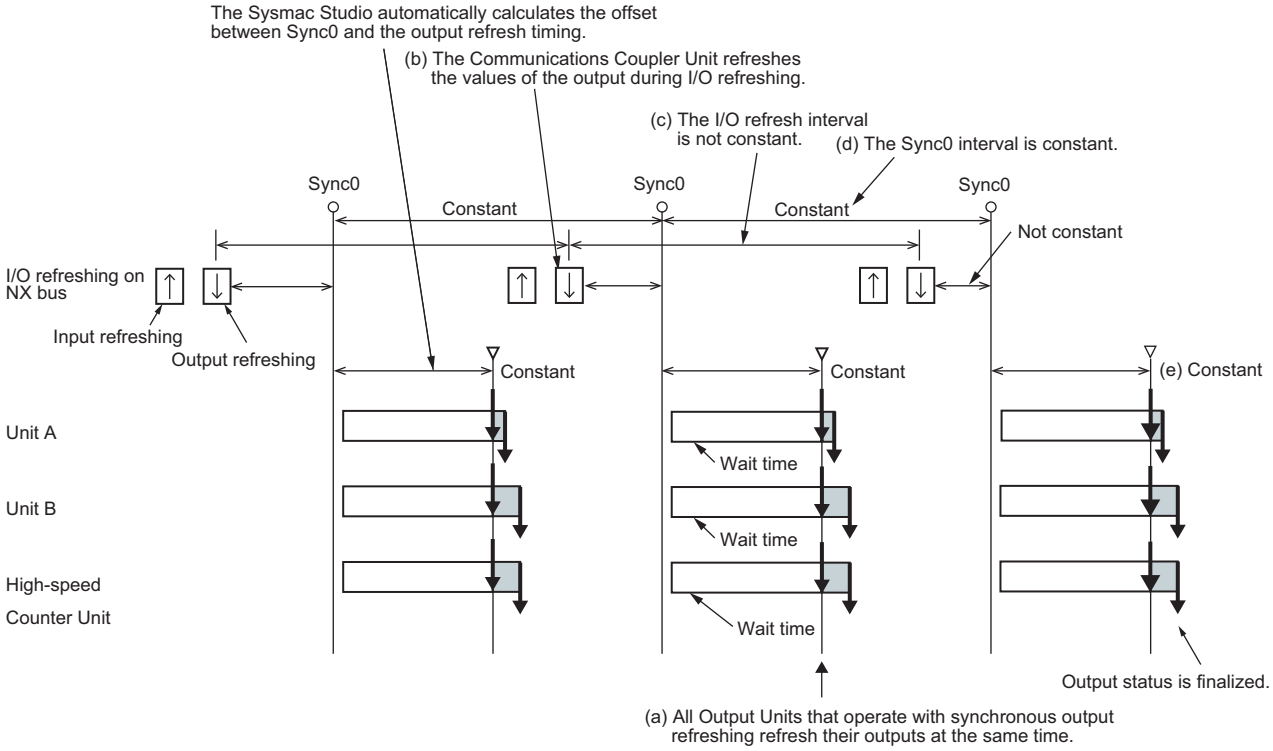

Precautions for Correct Use

The NX bus refresh cycle is automatically set to agree with the task period of the primary period task or priority-5 periodic task, but the task period is not set automatically. Set the task period to a value that is greater than the refresh cycle of the NX bus that is calculated by the Sysmac Studio. Refer to the software user's manual for the connected CPU Unit or to the user's manual for the connected EtherCAT Coupler Unit for details on setting the task period for periodic tasks.

Additional Information

Refer to the *NX-series EtherCAT Coupler Unit User's Manual (Cat. No. W519)* for details on the operation of I/O refreshing with connections that do not use the built-in EtherCAT port on the NJ/NX-series CPU Unit or NY-series Industrial PC.

5-2-6 Operation of Task Period Prioritized Refreshing

With task period prioritized refreshing, shortening the task period is given priority over synchronizing the I/O timing with other NX Units that use synchronous I/O refreshing. High-speed Counter Units operate with input prioritized refreshing.
This section describes the operations of input prioritized refreshing.

● Operation of Input Prioritized Refreshing

- The Communications Coupler Unit performs I/O processing so that the input values of NX Units are read during the next I/O refresh. (Refer to (a) in the figure below.)
- The I/O refreshing interval changes according to the processing conditions of the Communications Coupler Unit and host communications master (refer to (c) in the figure below), so the inputs are read at the next I/O refresh. (Refer to (b) in the figure below.)
- Because input processing is given priority, output processing is performed after input processing is completed. (Refer to (d) in the figure below.)

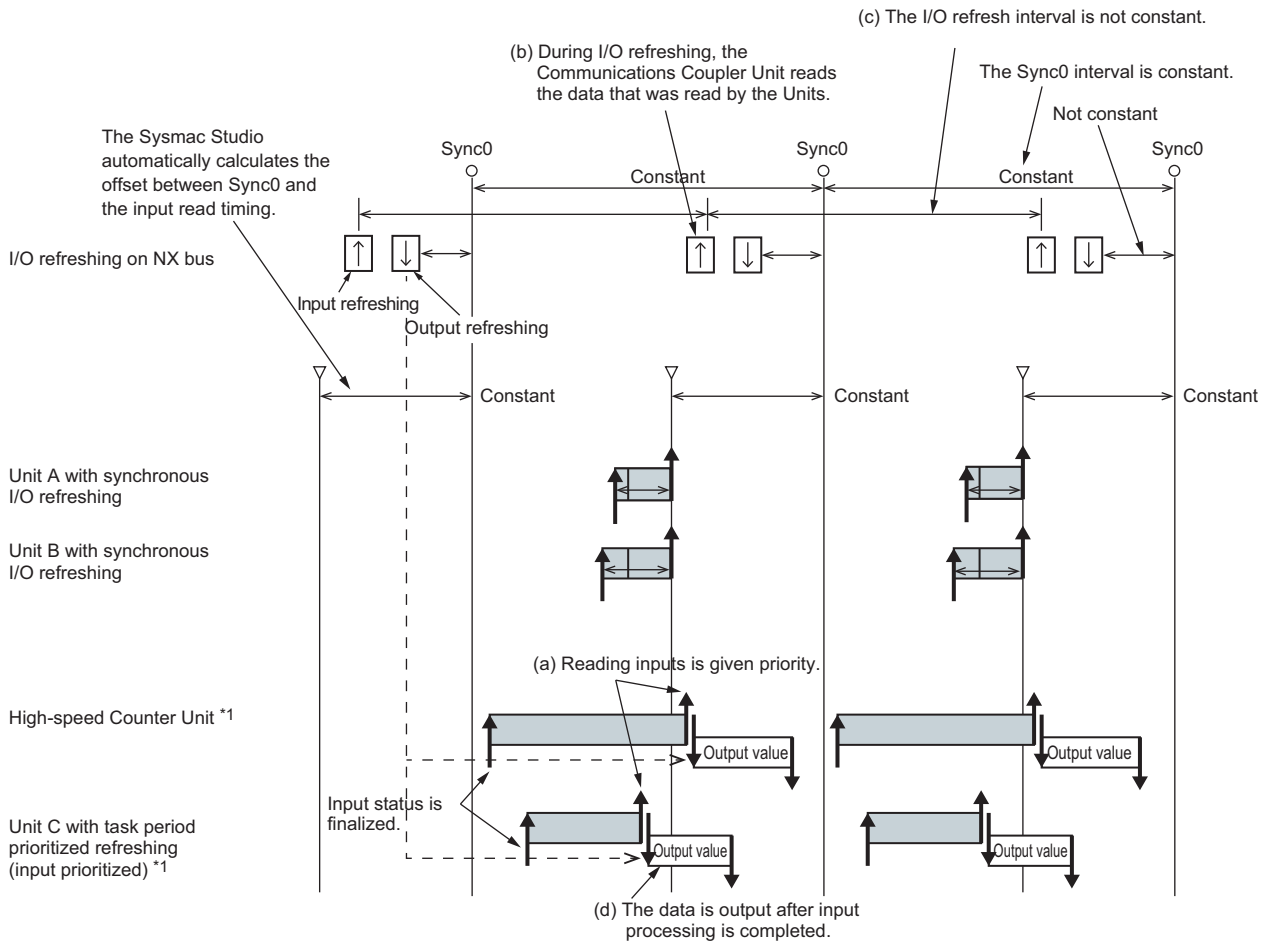

*1. The timing of I/O is given as an example. The actual timing will vary.

Additional Information

Refer to the *NX-series EtherCAT Coupler Unit User's Manual (Cat. No. W519)* for details on the operation of I/O refreshing with connections that do not use the built-in EtherCAT port on the NJ/NX-series CPU Unit or NY-series Industrial PC.

6

I/O Data and List of Settings

This section describes the I/O data specifications and settings for High-speed Counter Units.

6-1 Specifications of I/O Data 6-2
6-1-1 Data Items for Allocation to I/O 6-2
6-1-2 Aggregated Data Details 6-11

6-2 List of Settings 6-38
6-2-1 Counter Mode Switching Function Parameters 6-38
6-2-2 Counter Function Parameters 6-39
6-2-3 External Input Function Parameters 6-54
6-2-4 Comparison Function Parameters 6-55
6-2-5 External Output Function Parameters 6-63

6-1 Specifications of I/O Data

This section describes the I/O data for High-speed Counter Units.

6-1-1 Data Items for Allocation to I/O

An NX-series CPU Unit cyclically performs I/O refreshing with the NX Units.
A total of 6 I/O entry mappings, 3 for input and 3 for output, can be allocated to the High-speed Counter Unit I/O allocation settings.
The I/O entries for the High-speed Counter Unit are assigned to the I/O entry mappings. An I/O entry means the I/O data described in this section. An I/O entry mapping means a collection of I/O entries.

I/O entry mappings in the High-speed Counter Unit always have a fixed allocation to the *Data Set 1* in use. Also, when setting to 6ch mode, be sure to allocate *Data Set 2* in addition to *Data Set 1*.
When setting to 2ch mode, *Data Set 2* can be deleted.
Data Set 3 can be arbitrarily added or deleted. Allocate the I/O entry according to the function in use.
Refer to the user's manual for the connected CPU Unit or Communications Coupler Unit for information on how to add or delete I/O entries to/from I/O entry mapping.

The I/O entry mappings in the High-speed Counter Unit are described in the following table.

Allocatable I/O Data

This section describes the allocatable I/O data.

● Input Data Set 1

I/O data which can be allocated to Input Data Set 1 is displayed below. Input Data Set 1 has a fixed allocation and cannot be deleted.

Data Name	Function	Data type	Default value	I/O Port Name	Index (hex)	Subindex (hex)
Ch1 Counter Status*1	Aggregated counter status data for Ch1.	DWORD	00000000 hex	Ch1 Counter Status	6000	01
Ch2 Counter Status*1	Aggregated counter status data for Ch2.	DWORD	00000000 hex	Ch2 Counter Status		02
Ch1 Present Counter Value	Present counter value for Ch1.	DINT	0	Ch1 Present Counter Value	6002	01
Ch2 Present Counter Value	Present counter value for Ch2.	DINT	0	Ch2 Present Counter Value		02

*1. Refer to *6-1-2 Aggregated Data Details* on page 6-11 for detailed data.

● Input Data Set 2

I/O data which can be allocated to Input Data Set 2 is displayed below. When setting to 6ch mode, be sure to allocate Input Data Set 2 in addition to Input Data Set 1. When setting to 2ch mode, Input Data Set 2 can be deleted. When Input Data Set 2 is allocated, the following 8 I/O data can be allocated as a batch. It is not possible to allocate only part of the I/O data.

Data Name	Function	Data type	Default value	I/O Port Name	Index (hex)	Subindex (hex)
Ch3 Counter Status*1	Aggregated counter status data for Ch3.	WORD	0000 hex	Ch3 Counter Status	6000	03
Ch4 Counter Status*1	Aggregated counter status data for Ch4.	WORD	0000 hex	Ch4 Counter Status		04
Ch5 Counter Status*1	Aggregated counter status data for Ch5.	WORD	0000 hex	Ch5 Counter Status		05
Ch6 Counter Status*1	Aggregated counter status data for Ch6.	WORD	0000 hex	Ch6 Counter Status		06
Ch3 Present Counter Value	Present counter value for Ch3.	DINT	0	Ch3 Present Counter Value	6002	03
Ch4 Present Counter Value	Present counter value for Ch4.	DINT	0	Ch4 Present Counter Value		04
Ch5 Present Counter Value	Present counter value for Ch5.	DINT	0	Ch5 Present Counter Value		05
Ch6 Present Counter Value	Present counter value for Ch6.	DINT	0	Ch6 Present Counter Value		06

*1. Refer to *6-1-2 Aggregated Data Details* on page 6-11 for detailed data.

Input Data Set 3

Input Data Set 3 can be arbitrarily added or deleted. Allocate the I/O entry according to the function in use.

Data Name	Function	Data type	Default value	I/O Port Name	Index (hex)	Subindex (hex)
Ch1 Latch1 Count Data	Count data when Ch1 latch1 is complete.	DINT	0	Ch1 Latch1 Count Data	6004	01
Ch2 Latch1 Count Data	Count data when Ch2 latch1 is complete.	DINT	0	Ch2 Latch1 Count Data		02
Ch3 Latch1 Count Data	Count data when Ch3 latch1 is complete.	DINT	0	Ch3 Latch1 Count Data		03
Ch4 Latch1 Count Data	Count data when Ch4 latch1 is complete.	DINT	0	Ch4 Latch1 Count Data		04
Ch5 Latch1 Count Data	Count data when Ch5 latch1 is complete.	DINT	0	Ch5 Latch1 Count Data		05
Ch6 Latch1 Count Data	Count data when Ch6 latch1 is complete.	DINT	0	Ch6 Latch1 Count Data		06
Ch1 Latch2 Count Data	Count data when Ch1 latch2 is complete.	DINT	0	Ch1 Latch2 Count Data	6005	01
Ch2 Latch2 Count Data	Count data when Ch2 latch2 is complete.	DINT	0	Ch2 Latch2 Count Data		02
Ch1 Counter Log Status*1	Aggregated counter log status data for Ch1.	WORD	0000 hex	Ch1 Counter Log Status	6006	01
Ch1 Counter Log Valid Data Number	Counter log valid data number for Ch1. The range is from 0 to 16.	UINT	0	Ch1 Counter Log Valid Data Number	6007	01
Ch1 Counter Log Data1	Counter log data1 for Ch1.	DINT	0	Ch1 Counter Log Data1	6008	01
Ch1 Counter Log Data2	Counter log data2 for Ch1.	DINT	0	Ch1 Counter Log Data2		02
Ch1 Counter Log Data3	Counter log data3 for Ch1.	DINT	0	Ch1 Counter Log Data3		03
Ch1 Counter Log Data4	Counter log data4 for Ch1.	DINT	0	Ch1 Counter Log Data4		04
Ch1 Counter Log Data5	Counter log data5 for Ch1.	DINT	0	Ch1 Counter Log Data5		05
Ch1 Counter Log Data6	Counter log data6 for Ch1.	DINT	0	Ch1 Counter Log Data6		06
Ch1 Counter Log Data7	Counter log data7 for Ch1.	DINT	0	Ch1 Counter Log Data7		07
Ch1 Counter Log Data8	Counter log data8 for Ch1.	DINT	0	Ch1 Counter Log Data8		08
Ch1 Counter Log Data9	Counter log data9 for Ch1.	DINT	0	Ch1 Counter Log Data9		09
Ch1 Counter Log Data10	Counter log data10 for Ch1.	DINT	0	Ch1 Counter Log Data10		0A

Data Name	Function	Data type	Default value	I/O Port Name	Index (hex)	Subindex (hex)
Ch1 Counter Log Data11	Counter log data11 for Ch1.	DINT	0	Ch1 Counter Log Data11	6008	0B
Ch1 Counter Log Data12	Counter log data12 for Ch1.	DINT	0	Ch1 Counter Log Data12		0C
Ch1 Counter Log Data13	Counter log data13 for Ch1.	DINT	0	Ch1 Counter Log Data13		0D
Ch1 Counter Log Data14	Counter log data14 for Ch1.	DINT	0	Ch1 Counter Log Data14		0E
Ch1 Counter Log Data15	Counter log data15 for Ch1.	DINT	0	Ch1 Counter Log Data15		0F
Ch1 Counter Log Data16	Counter log data16 for Ch1.	DINT	0	Ch1 Counter Log Data16		10
Ch1 Pulse Rate	Ch1 pulse rate value.	DINT	0	Ch1 Pulse Rate	6003	01
Ch2 Pulse Rate	Ch2 pulse rate value.	DINT	0	Ch2 Pulse Rate		02
Ch3 Pulse Rate	Ch3 pulse rate value.	DINT	0	Ch3 Pulse Rate		03
Ch4 Pulse Rate	Ch4 pulse rate value.	DINT	0	Ch4 Pulse Rate		04
Ch5 Pulse Rate	Ch5 pulse rate value.	DINT	0	Ch5 Pulse Rate		05
Ch6 Pulse Rate	Ch6 pulse rate value.	DINT	0	Ch6 Pulse Rate		06
Ch1 Pulse Period Measured Value	Ch1 A-phase pulse period measured value.	UDINT	0	Ch1 Pulse Period Measured Value	6009	01
Ch2 Pulse Period Measured Value	Ch2 A-phase pulse period measured value.	UDINT	0	Ch2 Pulse Period Measured Value		02
Ch1 Time Stamp	When changed from the present counter value previously obtained in Ch1, the acquired DC time is displayed. The unit is ns.	ULINT	0	Ch1 Time Stamp	6018	01
Ch2 Time Stamp	When changed from the present counter value previously obtained in Ch2, the acquired DC time is displayed. The unit is ns.	ULINT	0	Ch2 Time Stamp		02
External Output Status*1	Aggregated external input status data.	WORD	0000 hex	External Input Status	6014	01
Comparison Setting Status*1	Aggregated comparison setting status data. Used when writing or reading target comparison data or range comparison data.	WORD	0000 hex	Comparison Setting Status	600C	01
Target Value of Target Comparison Read Data	Target value when reading target comparison data.	DINT	0	Target Value of Target Comparison Read Data	6011	01
Advance Time of Target Comparison Read Data	Time passed when reading target comparison data. The unit is μs.	DINT	0	Advance Time of Target Comparison Read Data	6012	01

Data Name	Function	Data type	Default value	I/O Port Name	Index (hex)	Subindex (hex)
pCV Crossing Output Pattern of Target Comparison Read Data*1	Aggregated target comparison addition match output pattern data when reading target comparison data.	WORD	0000 hex	pCV Crossing Output Pattern of Target Comparison Read Data	6013	01
mCV Crossing Output Pattern of Target Comparison Read Data*1	Aggregated target comparison subtraction match output pattern data when reading target comparison data.	WORD	0000 hex	mCV Crossing Output Pattern of Target Comparison Read Data		02
Lower Limit Value of Range Comparison Read Data	Range comparison lower limit value when reading range comparison setting data.	DINT	0	Lower Limit Value of Range Comparison Read Data	600D	01
Upper Limit Value of Range Comparison Read Data*1	Range comparison upper limit value when reading range comparison setting data.	DINT	0	Upper Limit Value of Range Comparison Read Data		02
Output Pattern of Range Comparison Read Data*1	Aggregated output pattern data when reading range comparison setting data.	DINT	0	Output Pattern of Range Comparison Read Data	600F	01
External Output0 PWM Status*1	Aggregated external output0 PWM status data.	WORD	0000 hex	External Output0 PWM Status	6016	01
External Output Status*1	Aggregated external output status data.	WORD	0000 hex	External Output Status	6014	01

*1. Refer to *6-1-2 Aggregated Data Details* on page 6-11 for detailed data.

Precautions for Correct Use

When setting the advance time to other than 0 μs (default) in target comparison, ensure that the total bytes size of input data is within 160 bytes (1280 bit).
By default, the total bytes size of input data is 40 bytes (320 bit).

● Output Data Set 1

I/O data which can be allocated to Output Data Set 1 is displayed below. Output Data Set 1 has a fixed allocation and cannot be deleted.

Data Name	Function	Data type	Default value	I/O Port Name	Index (hex)	Subindex (hex)
Ch1 Counter Operation Command*1	Aggregated counter operation command data for Ch1.	WORD	0000 hex	Ch1 Counter Operation Command	7000	01
Ch2 Counter Operation Command*1	Aggregated counter operation command data for Ch2.	WORD	0000 hex	Ch2 Counter Operation Command		02
External Output Force ON/OFF Command	Aggregated external output force ON/OFF operation command data.	WORD	0000 hex	External Output Force ON/OFF Command	701A	01

*1. Refer to *6-1-2 Aggregated Data Details* on page 6-11 for detailed data.

● Output Data Set 2

I/O data which can be allocated to Output Data Set 2 is displayed below. When setting to 6ch mode, be sure to allocate Output Data Set 2 in addition to Output Data Set 1. When setting to 2ch mode, Output Data Set 2 can be deleted. When Output Data Set 2 is allocated, the following 4 I/O data can be allocated as a batch. It is not possible to allocate only part of the I/O data.

Data Name	Function	Data type	Default value	I/O Port Name	Index (hex)	Subindex (hex)
Ch3 Counter Operation Command*1	Aggregated counter operation command data for Ch3.	WORD	0000 hex	Ch3 Counter Operation Command	7000	03
Ch4 Counter Operation Command*1	Aggregated counter operation command data for Ch4.	WORD	0000 hex	Ch4 Counter Operation Command		04
Ch5 Counter Operation Command*1	Aggregated counter operation command data for Ch5.	WORD	0000 hex	Ch5 Counter Operation Command		05
Ch6 Counter Operation Command*1	Aggregated counter operation command data for Ch6.	WORD	0000 hex	Ch6 Counter Operation Command		06

*1. Refer to *6-1-2 Aggregated Data Details* on page 6-11 for detailed data.

Output Data Set 3

Output Data Set 3 can be arbitrarily added or deleted. Allocate the I/O entry according to the function in use.

Data Name	Function	Data type	Default value	I/O Port Name	Index (hex)	Sub-index (hex)
Ch1 Preset Command Value	Preset command value for Ch1.	DINT	0	Ch1 Preset Command Value	7003	01
Ch2 Preset Command Value	Preset command value for Ch2.	DINT	0	Ch2 Preset Command Value		02
Ch3 Preset Command Value	Preset command value for Ch3.	DINT	0	Ch3 Preset Command Value		03
Ch4 Preset Command Value	Preset command value for Ch4.	DINT	0	Ch4 Preset Command Value		04
Ch5 Preset Command Value	Preset command value for Ch5.	DINT	0	Ch5 Preset Command Value		05
Ch6 Preset Command Value	Preset command value for Ch6.	DINT	0	Ch6 Preset Command Value		06
Ch1 Counter Log Operation Command*1	Aggregated counter log operation command data for Ch1.	WORD	0000 hex	Ch1 Counter Log Operation Command	7001	01
Ch1 Pulse Period Measurement Command	Aggregated Pulse Period Measurement Command data for Ch1.	WORD	0000 hex	Ch1 Pulse Period Measurement Command	7008	01
Ch2 Pulse Period Measurement Command	Aggregated Pulse Period Measurement Command data for Ch2.	WORD	0000 hex	Ch2 Pulse Period Measurement Command		02
Comparison Setting Command*1	Aggregated comparison setting command data. Used when writing or reading target comparison data or range comparison data.	WORD	0000 hex	Comparison Setting Command	700C	01
Comparison Setting Data Number*1	Sets comparison data number when writing or reading target comparison data or range comparison data. The setting range is from 0 to 31.	UINT	0	Comparison Setting Data Number	700D	01
Target Value of Target Comparison Write Data	Target value when writing target comparison data.	DINT	0	Target Value of Target Comparison Write Data	7011	01
Advance Time of Target Comparison Write Data	Time passed when writing target comparison data. The unit is μs.	UINT	0	Advance Time of Target Comparison Write Data	7012	01
pCV Crossing Output Pattern of Target Comparison Write Data*1	Aggregated target comparison addition match output pattern data when writing target comparison data.	WORD	0000 hex	pCV Crossing Output Pattern of Target Comparison Write Data	7013	01
mCV Crossing Output Pattern of Target Comparison Write Data*1	Aggregated target match comparison subtraction match output pattern data when writing target comparison data.	WORD	0000 hex	mCV Crossing Output Pattern of Target Comparison Write Data		02

Data Name	Function	Data type	Default value	I/O Port Name	Index (hex)	Sub-index (hex)
Output Pattern at Ch1 Counter Reset/Preset of Target Comparison*1	Aggregated Ch1 counter reset/preset of target comparison output pattern data.	WORD	0000 hex	Output Pattern at Ch1 Counter Reset/Preset of Target Comparison	701B	01
Output Pattern at Ch2 Counter Reset/Preset of Target Comparison*1	Aggregated Ch2 counter reset/preset of target comparison output pattern data.	WORD	0000 hex	Output Pattern at Ch2 Counter Reset/Preset of Target Comparison		02
Lower Limit Value of Range Comparison Write Data	Range comparison lower limit value when writing range comparison setting data.	DINT	0	Lower Limit Value of Range Comparison Write Data	700E	01
Upper Limit Value of Range Comparison Write Data	Range comparison upper limit value when writing range comparison setting data.	DINT	0	Upper Limit Value of Range Comparison Write Data		02
Output Pattern of Range Comparison Write Data*1	Aggregated output pattern data when writing range comparison setting data. Setting is not required for 6ch mode range comparison.	WORD	0000 hex	Output Pattern of Range Comparison Write Data	700F	01
Ch1 Comparison Setting Data Enable1*1	Aggregated Ch1 comparison setting data enable1 data. Sets range comparison data0 to 15 or target comparison data0 to 15 to Enable/Disable.	WORD	0000 hex	Ch1 Comparison Setting Data Enable1	7014	01
Ch2 Comparison Setting Data Enable1*1	Aggregated Ch2 comparison setting data enable1 data. Sets range comparison data0 to 15 or target comparison data0 to 15 to Enable/Disable.	WORD	0000 hex	Ch2 Comparison Setting Data Enable1		02
Ch1 Comparison Setting Data Enable2*1	Aggregated Ch1 comparison setting data enable2 data. Sets range comparison data16 to 31 or target comparison data16 to 31 to Enable/Disable.	WORD	0000 hex	Ch1 Comparison Setting Data Enable2		03
Ch2 Comparison Setting Data Enable2*1	Aggregated Ch2 comparison setting data enable2 data. Sets range comparison data16 to 31 or target comparison data16 to 31 to Enable/Disable.	WORD	0000 hex	Ch2 Comparison Setting Data Enable2		04
Comparison Setting Data Enable 6ch Mode*1	Aggregated comparison setting data enable data in 6ch mode.	WORD	0000 hex	Comparison Setting Data Enable for 6ch Mode	7016	01
External Output0 PWM Operation Command*1	Aggregated external output0 PWM operation command data.	WORD	0000 hex	External Output0 PWM Operation Command	7017	01

Data Name	Function	Data type	Default value	I/O Port Name	Index (hex)	Sub-index (hex)
External Output0 PWM Frequency Setting	PWM frequency setting for external output0. When the frequency unit setting is 0.1 Hz, the setting range is 1 (0.1 Hz) to 65535 (6553.5 Hz); when the frequency unit setting is 1 Hz, the setting range is 1 (1 Hz) to 32800 (32800 Hz).	UINT	0	External Output0 PWM Frequency Setting	7018	01
External Output0 PWM Duty Setting	PWM duty setting for external output0. The duty unit is 0.1%. The setting range is from 0 (0.0%) to 1000 (100.0%).	UINT	0	External Output0 PWM Duty Setting	7019	01

*1. Refer to *6-1-2 Aggregated Data Details* on page 6-11 for detailed data.

6-1-2 Aggregated Data Details

The details of each type of aggregated data are given below.

- Ch1 to 2 Counter Status
- Ch3 to 6 Counter Status
- Ch1 Counter Log Status
- External Input Status
- Comparison Setting Status
- pCV Crossing Output Pattern of Target Comparison Read Data
- mCV Crossing Output Pattern of Target Comparison Read Data
- Output Pattern of Range Comparison Read Data
- External Output0 PWM Status
- External Output Status
- Ch□ Counter Operation Command
- External Output Force ON/OFF Command
- Ch1 Counter Log Operation Command
- Ch□Pulse Period Measurement Command
- Comparison Setting Command
- pCV Crossing Output Pattern of Target Comparison Write Data
- mCV Crossing Output Pattern of Target Comparison Write Data
- Ch□ Counter Reset/Preset of Target Comparison Output Pattern
- Output Pattern of Range Comparison Write Data
- Ch□ Comparison Setting Data Enable1
- Ch□ Comparison Setting Data Enable2
- Comparison Setting Data Enable 6ch Mode
- External Output0 PWM Operation Command

Ch1 to 2 Counter Status

Aggregated counter status data.

Data Name	Data type	Default value	I/O Port Name	Index (hex)	Subindex (hex)
Ch1 Counter Status	DWORD	00000000 hex	Ch1 Counter Status	6000	01
Ch2 Counter Status		00000000 hex	Ch2 Counter Status		02

The details of counter status for Ch□ are given in the following table.

Bit	Data Name	Function	Data type	I/O Port Name
0	Counter Enabled	1: Counter operating. 0: Counter stopped.	BOOL	Ch□ Counter Enabled
1	Count Direction Flag	This bit indicates the count direction based on the last pulse input. *1 1: Reverse direction. 0: Forward direction.	BOOL	Ch□ Count Direction Flag
2	Counter Underflow Flag	1: Counter underflow error occurred. 0: Counter underflow error did not occur.	BOOL	Ch□ Counter Underflow Flag
3	Counter Overflow Flag	1: Counter overflow error occurred. 0: Counter overflow error did not occur.	BOOL	Ch□ Counter Overflow Flag
4	Internal Counter Reset Completed	This is the completed flag for the internal counter reset execution bit of the counter operation command parameter. 0→1: Counter reset execution is complete. 1→0: The internal counter reset execution bit in the counter operation command parameter is set to 0.	BOOL	Ch□ Internal Counter Reset Completed
5	Internal Counter Preset Completed	This is the completed flag for the internal counter preset execution bit of the counter operation command parameter. 0→1: Counter preset execution is complete. 1→0: The internal counter preset execution bit in the counter operation command parameter is set to 0.	BOOL	Ch□ Internal Counter Preset Completed
6	External Input Counter Reset Completed Flag	1: External input counter reset is complete. 0: External input counter reset is not complete.	BOOL	Ch□ External Input Counter Reset Completed Flag
7	External Input Counter Preset Completed Flag	1: External input counter preset is complete. 0: External input counter preset is not complete.	BOOL	Ch□ External Input Counter Preset Completed Flag
8	Counter Latch1 Completed Flag	1: Counter latch1 data latch is complete. 0: Counter latch1 data latch is not complete.	BOOL	Ch□ Counter Latch1 Completed Flag
9	External Input Counter Reset Enabled Flag	0: Counter reset disabled by external input, Z-phase, target comparison. 1: Counter reset enabled by external input, Z-phase, target comparison.	BOOL	Ch□ External Counter Reset Enabled Flag
10	External Input Counter Preset Enabled Flag	0: Counter preset disabled by external input or target comparison. 1: Counter preset enabled by external input or target comparison.	BOOL	Ch□ External Counter Preset Enabled Flag
11	Counter Latch1 Enabled Flag	0: Counter latch1 disabled. 1: Counter latch1 enabled.	BOOL	Ch□ Counter Latch1 Enabled Flag

Bit	Data Name	Function	Data type	I/O Port Name
12	Counter Preset Value Error Flag	1: Setting error occurred. 0: No setting errors occurred.	BOOL	Ch□ Counter Preset Value Error Flag
13 to 15	Reserved	---	---	---
16	Phase Z Counter Reset Completed Flag	1: Counter reset for phase-Z signal is complete. 0: Counter reset for phase-Z signal is not complete.	BOOL	Ch□ Phase Z Counter Reset Completed Flag
17	Target Comparison Counter Reset Completed Flag	1: Counter reset by target comparison is complete. 0: Counter reset by target comparison is not complete.	BOOL	Ch□ Target Comparison Counter Reset Completed Flag
18	Target Comparison Counter Preset Completed Flag	1: Counter preset by target comparison is complete. 0: Counter preset by target comparison is not complete.	BOOL	Ch□ Target Comparison Counter Preset Completed Flag
19	Counter Latch2 Completed Flag	1: Data was latched for counter latch2. 0: Data was not latched for counter latch2.	BOOL	Ch□ Counter Latch2 Completed Flag
20	Counter Latch2 Enabled Flag	0: Counter latch2 disabled. 1: Counter latch2 enabled.	BOOL	Ch□ Counter Latch2 Enabled Flag
21	Pulse Period Measurement Enabled	1: Pulse period measurement enabled. 0: Pulse period measurement disabled.	BOOL	Ch□ Pulse Period Measurement Enabled Flag
22	Pulse Period Measurement Value Clear Completed bit	1: Pulse period measurement value clear completed. 0: Pulse period measurement value clear bit set to 0.	BOOL	Ch□ Pulse Period Measurement Value Clear Completed Flag
23	Pulse Period Measurement Value Overflow Flag	1: Pulse period measurement value overflow occurred. 0: Pulse period measurement value overflow did not occur.	BOOL	Ch□ Pulse Period Measurement Value Overflow Flag
24 to 31	Reserved	---	---	---

*1. The indicated count direction is based on the setting of the **Count Direction** parameter.
This bit indicates the count direction based on the last pulse input. Therefore, the direction given by the *Count Direction Flag* and the difference between the previous and current values of the Counter Current Position parameter may not agree if there is oscillation in the pulse input.

Ch3 to 6 Counter Status

Aggregated counter status data.

Data Name	Data type	Default value	I/O Port Name	Index (hex)	Subindex (hex)
Ch3 Counter Status	WORD	0000 hex	Ch3 Counter Status	6000	03
Ch4 Counter Status		0000 hex	Ch4 Counter Status		04
Ch5 Counter Status		0000 hex	Ch4 Counter Status		05
Ch6 Counter Status		0000 hex	Ch4 Counter Status		06

The details of counter status for Ch□ are given in the following table.

Bit	Data Name	Function	Data type	I/O Port Name
0	Counter Enabled	1: Counter operating. 0: Counter stopped.	BOOL	Ch□ Counter Enabled

Bit	Data Name	Function	Data type	I/O Port Name
1	Count Direction Flag	This bit indicates the count direction based on the last pulse input. *1 1: Reverse direction. 0: Forward direction.	BOOL	Ch□ Count Direction Flag
2	Counter Underflow Flag	1: Counter underflow error occurred. 0: Counter underflow error did not occur.	BOOL	Ch□ Counter Underflow Flag
3	Counter Overflow Flag	1: Counter overflow error occurred. 0: Counter overflow error did not occur.	BOOL	Ch□ Counter Overflow Flag
4	Internal Counter Reset Completed	This is the completed flag for the internal counter reset execution bit of the counter operation command parameter. 0→1: Counter reset execution is complete. 1→0: The internal counter reset execution bit in the counter operation command parameter is set to 0.	BOOL	Ch□ Internal Counter Reset Completed
5	Internal Counter Preset Completed	This is the completed flag for the internal counter preset execution bit of the counter operation command parameter. 0→1: Counter preset execution is complete. 1→0: The internal counter preset execution bit in the counter operation command parameter is set to 0.	BOOL	Ch□ Internal Counter Preset Completed
6	External Input Counter Reset Completed Flag	1: External input counter reset is complete. 0: External input counter reset is not complete.	BOOL	Ch□ External Input Counter Reset Completed Flag
7	External Input Counter Preset Completed Flag	1: External input counter preset is complete. 0: External input counter preset is not complete.	BOOL	Ch□ External Input Counter Preset Completed Flag
8	Counter Latch1 Completed Flag	1: Counter latch1 data latch is complete. 0: Counter latch1 data latch is not complete.	BOOL	Ch□ Counter Latch1 Completed Flag
9	External Input Counter Reset Enabled Flag	0: Counter reset disabled by external input, Z-phase, target comparison. 1: Counter reset enabled by external input, Z-phase, target comparison.	BOOL	Ch□ External Counter Reset Enabled Flag
10	External Input Counter Preset Enabled Flag	0: Counter reset disabled by external input or target comparison. 1: Counter reset enabled by external input or target comparison.	BOOL	Ch□ External Counter Preset Enabled Flag
11	Counter Latch1 Enabled Flag	0: Counter latch1 disabled. 1: Counter latch1 enabled.	BOOL	Ch□ Counter Latch1 Enabled Flag
12	Counter Preset Value Error Flag	1: Setting error occurred. 0: No setting errors occurred.	BOOL	Ch□ Counter Preset Value Error Flag
13 to 15	Reserved	---	---	---

*1. The indicated count direction is based on the setting of the **Count Direction** parameter.
This bit indicates the count direction based on the last pulse input. Therefore, the direction given by the *Count Direction Flag* and the difference between the previous and current values of the Counter Current Position parameter may not agree if there is oscillation in the pulse input.

Ch1 Counter Log Status

Aggregated counter log status data for Ch1. Ch2 to 6 have no counter log function.

Data Name	Data type	Default value	I/O Port Name	Index (hex)	Subindex (hex)
Ch1 Counter Log Status	WORD	0000 hex	Ch1 Counter Log Status	6006	01

The details of Counter Log Status for Ch1 are given in the following table.

Bit	Data Name	Function	Data type	I/O Port Name
0	Counter Log Enabled Flag	0: Counter log disabled. 1: Counter log enabled.	BOOL	Ch1 Counter Log Enabled Flag
1	Counter Log Buffer Full	0: No full buffer. 1: Unit internal 4096 buffers have all been used.	BOOL	Ch1 Counter Log Buffer Full
2	Counter Log Data Available Flag	0: All data within buffer read. 1: Unread data remains within buffer.	BOOL	Ch1 Counter Log Data Available Flag
3	Counter Log Read Completed Flag	This is the completed flag for the counter log read execution bit of the counter log operation command parameter. 0→1: Counter log read execution is complete. 1→0: The counter log read execution bit in the counter log operation command parameter is set to 0.	BOOL	Ch1 Counter Log Read Completed Flag
4 to 15	Reserved	---	---	---

External Input Status

Aggregated external input status data.

Data Name	Data type	Default value	I/O Port Name	Index (hex)	Subindex (hex)
External Input Status	WORD	0000 hex	External Input Status	6001	01

The details of External Input Status are given in the following table.

Bit	Data Name	Function	Data type	I/O Port Name
0	External Input0 Status	1: External input0 ON. 0: External input0 OFF.	BOOL	External Input0 Status
1	External Input1 Status	1: External input1 ON. 0: External input1 OFF.	BOOL	External Input1 Status
2	External Input2 Status	1: External input2 ON. 0: External input2 OFF.	BOOL	External Input2 Status
3	External Input3 Status	1: External input3 ON. 0: External input3 OFF.	BOOL	External Input3 Status
4	External Input4 Status	1: External input4 ON. 0: External input4 OFF.	BOOL	External Input4 Status
5	External Input5 Status	1: External input5 ON. 0: External input5 OFF.	BOOL	External Input5 Status
6 to 15	Reserved	---	---	---

Comparison Setting Status

Aggregated comparison setting status data.
Displays setting status for Target Comparison Data or Range Comparison Data.

Data Name	Data type	Default value	I/O Port Name	Index (hex)	Subindex (hex)
Comparison Setting Status	WORD	0000 hex	Comparison Setting Status	600C	01

The details of Comparison Setting Status are given in the following table.

Bit	Data Name	Function	Data type	I/O Port Name
0	Comparison Data Setting Completed	This is the comparison setting command comparison data setting request completed flag. 0→1: Comparison data setting request processing complete. 1→0: Bit set to 0 when comparison setting command comparison data setting request is set to 0.	BOOL	Comparison Data Setting Completed
1	Comparison Setting Write Error Flag	1: Error when writing settings. *1 0: No error when writing settings.	BOOL	Comparison Setting Write Error Flag
2	Comparison Setting Read Error Flag	1: Error when reading settings. *2 0: No error when reading settings.	BOOL	Comparison Setting Read Error Flag
3 to 15	Reserved	---	---	---

*1. For target comparison, the following situations will lead to an error.
- Target value set out of range.
- *Comparison data setting request* multiple bits set simultaneously to 1.
- *Comparison Setting Data Number* set out of range.

For range comparison, the following situations will lead to an error.
- Upper or lower limit set out of range.
- In linear mode, upper limit set below lower limit.
- *Comparison data setting request* multiple bits set simultaneously to 1.
- *Comparison Setting Data Number* set out of range.

*2. The following situations will lead to an error.
- No valid data when reading settings (not written).
- *Comparison data setting request* multiple bits set simultaneously to 1.
- *Comparison Setting Data Number* set out of range.

pCV Crossing Output Pattern of Target Comparison Read Data

Aggregated data for pCV Crossing Output Pattern of Target Comparison Read Data.
During Present Counter Value addition, operation is displayed when the target value is matched.
When reading Target Comparison Data, the subtraction match output pattern of the Target Comparison Data Number specified by the Comparison Setting Data Number is stored.
Target comparison external output and counter reset/preset operation enable/disable are displayed with bits 0 to 7. When bits 0 to 7 are *enabled*, operation is displayed with bits 8 to 15.

Data Name	Data type	Default value	I/O Port Name	Index (hex)	Subindex (hex)
pCV Crossing Output Pattern of Target Comparison Read Data	WORD	0000 hex	pCV Crossing Output Pattern of Target Comparison Read Data	6013	01

The details of pCV Crossing Output Pattern of Target Comparison Read Data are given in the following table.

Bit	Data Name	Function	Data type	I/O Port Name
0	pCV Crossing Output Pattern of Target Comparison Read Data External Output0 Enable	0: Disable *1 1: Enable	BOOL	External Output0 Enable of pCV Crossing Read Data
1	pCV Crossing Output Pattern of Target Comparison Read Data External Output1 Enable	0: Disable *1 1: Enable	BOOL	External Output1 Enable of pCV Crossing Read Data
2	pCV Crossing Output Pattern of Target Comparison Read Data External Output2 Enable	0: Disable *1 1: Enable	BOOL	External Output2 Enable of pCV Crossing Read Data
3	pCV Crossing Output Pattern of Target Comparison Read Data External Output3 Enable	0: Disable *1 1: Enable	BOOL	External Output3 Enable of pCV Crossing Read Data
4	pCV Crossing Output Pattern of Target Comparison Read Data External Output4 Enable	0: Disable *1 1: Enable	BOOL	External Output4 Enable of pCV Crossing Read Data
5	pCV Crossing Output Pattern of Target Comparison Read Data External Output5 Enable	0: Disable *1 1: Enable	BOOL	External Output5 Enable of pCV Crossing Read Data
6	pCV Crossing Output Pattern of Target Comparison Read Data Ch1 Counter Reset Preset Enable	0: Disable *2 1: Enable	BOOL	Ch1 Counter Reset Preset Enable of pCV Crossing Read Data
7	pCV Crossing Output Pattern of Target Comparison Read Data Ch2 Counter Reset Preset Enable	0: Disable *2 1: Enable	BOOL	Ch2 Counter Reset Preset Enable of pCV Crossing Read Data
8	pCV Crossing Output Pattern of Target Comparison Read Data External Output0 Set or Reset	0: Reset when crossing the target. 1: Set when crossing the target.	BOOL	External Output0 Set or Reset of pCV Crossing Read Data
9	pCV Crossing Output Pattern of Target Comparison Read Data External Output1 Set or Reset	0: Reset when crossing the target. 1: Set when crossing the target.	BOOL	External Output1 Set or Reset of pCV Crossing Read Data

Bit	Data Name	Function	Data type	I/O Port Name
10	pCV Crossing Output Pattern of Target Comparison Read Data External Output2 Set or Reset	0: Reset when crossing the target. 1: Set when crossing the target.	BOOL	External Output2 Set or Reset of pCV Crossing Read Data
11	pCV Crossing Output Pattern of Target Comparison Read Data External Output3 Set or Reset	0: Reset when crossing the target. 1: Set when crossing the target.	BOOL	External Output3 Set or Reset of pCV Crossing Read Data
12	pCV Crossing Output Pattern of Target Comparison Read Data External Output4 Set or Reset	0: Reset when crossing the target. 1: Set when crossing the target.	BOOL	External Output4 Set or Reset of pCV Crossing Read Data
13	pCV Crossing Output Pattern of Target Comparison Read Data External Output5 Set or Reset	0: Reset when crossing the target. 1: Set when crossing the target.	BOOL	External Output5 Set or Reset of pCV Crossing Read Data
14	pCV Crossing Output Pattern of Target Comparison Read Data Ch1 Counter Reset or Preset	0: Execute counter reset when crossing the target. 1: Execute counter preset when crossing the target.	BOOL	Ch1 Counter Reset or Preset of pCV Crossing Read Data
15	pCV Crossing Output Pattern of Target Comparison Read Data Ch2 Counter Reset or Preset	0: Execute counter reset when crossing the target. 1: Execute counter preset when crossing the target.	BOOL	Ch2 Counter Reset or Preset of pCV Crossing Read Data

*1. *Enable*: When the target matches, external output is set or reset.
Disable: Output does not change according to the designated Target Comparison Data Number.

*2. *Enable*: When the target matches, counter reset or counter preset is executed.
Disable: Counter reset/counter preset are not completed according to the designated Target Comparison Data Number.

mCV Crossing Output Pattern of Target Comparison Read Data

Aggregated data for mCV Crossing Output Pattern of Target Comparison Read Data.
During Present Counter Value subtraction, operation is displayed when the target value is matched.
When reading Target Comparison Data, the subtraction match output pattern of the Target Comparison Data Number specified by the Comparison Setting Data Number is stored.
Target comparison external output and counter reset/preset operation enable/disable are displayed with bits 0 to 7. When bits 0 to 7 are *enabled*, operation is displayed with bits 8 to 15.

Data Name	Data type	Default value	I/O Port Name	Index (hex)	Subindex (hex)
mCV Crossing Output Pattern of Target Comparison Read Data	WORD	0000 hex	mCV Crossing Output Pattern of Target Comparison Read Data	6013	02

The details of mCV Crossing Output Pattern of Target Comparison Read Data are given in the following table.

Bit	Data Name	Function	Data type	I/O Port Name
0	mCV Crossing Output Pattern of Target Comparison Read Data External Output0 Enable	0: Disable *1 1: Enable	BOOL	External Output0 Enable of mCV Crossing Read Data
1	mCV Crossing Output Pattern of Target Comparison Read Data External Output1 Enable	0: Disable *1 1: Enable	BOOL	External Output1 Enable of mCV Crossing Read Data
2	mCV Crossing Output Pattern of Target Comparison Read Data External Output2 Enable	0: Disable *1 1: Enable	BOOL	External Output2 Enable of mCV Crossing Read Data
3	mCV Crossing Output Pattern of Target Comparison Read Data External Output3 Enable	0: Disable *1 1: Enable	BOOL	External Output3 Enable of mCV Crossing Read Data
4	mCV Crossing Output Pattern of Target Comparison Read Data External Output4 Enable	0: Disable *1 1: Enable	BOOL	External Output4 Enable of mCV Crossing Read Data
5	mCV Crossing Output Pattern of Target Comparison Read Data External Output5 Enable	0: Disable *1 1: Enable	BOOL	External Output5 Enable of mCV Crossing Read Data
6	mCV Crossing Output Pattern of Target Comparison Read Data Ch1 Counter Reset Preset Enable	0: Disable *2 1: Enable	BOOL	Ch1 Counter Reset Preset Enable of mCV Crossing Read Data
7	pCV Crossing Output Pattern of Target Comparison Read Data Ch2 Counter Reset Preset Enable	0: Disable *2 1: Enable	BOOL	Ch2 Counter Reset Preset Enable of mCV Crossing Read Data
8	mCV Crossing Output Pattern of Target Comparison Read Data External Output0 Set or Reset	0: Reset when crossing the target. 1: Set when crossing the target.	BOOL	External Output0 Set or Reset of mCV Crossing Read Data
9	mCV Crossing Output Pattern of Target Comparison Read Data External Output1 Set or Reset	0: Reset when crossing the target. 1: Set when crossing the target.	BOOL	External Output1 Set or Reset of mCV Crossing Read Data
10	mCV Crossing Output Pattern of Target Comparison Read Data External Output2 Set or Reset	0: Reset when crossing the target. 1: Set when crossing the target.	BOOL	External Output2 Set or Reset of mCV Crossing Read Data
11	mCV Crossing Output Pattern of Target Comparison Read Data External Output3 Set or Reset	0: Reset when crossing the target. 1: Set when crossing the target.	BOOL	External Output3 Set or Reset of mCV Crossing Read Data
12	mCV Crossing Output Pattern of Target Comparison Read Data External Output4 Set or Reset	0: Reset when crossing the target. 1: Set when crossing the target.	BOOL	External Output4 Set or Reset of mCV Crossing Read Data
13	mCV Crossing Output Pattern of Target Comparison Read Data External Output5 Set or Reset	0: Reset when crossing the target. 1: Set when crossing the target.	BOOL	External Output5 Set or Reset of mCV Crossing Read Data

Bit	Data Name	Function	Data type	I/O Port Name
14	mCV Crossing Output Pattern of Target Comparison Read Data Ch1 Counter Reset or Preset	0: Execute counter reset when crossing the target. 1: Execute counter preset when crossing the target.	BOOL	Ch1 Counter Reset or Preset of mCV Crossing Read Data
15	mCV Crossing Output Pattern of Target Comparison Read Data Ch2 Counter Reset or Preset	0: Execute counter reset when crossing the target. 1: Execute counter preset when crossing the target.	BOOL	Ch2 Counter Reset or Preset of mCV Crossing Read Data

*1. *Enable*: When the target matches, external output is set or reset.
Disable: Output does not change according to the designated Target Comparison Data Number.

*2. *Enable*: When the target matches, counter reset or counter preset is executed.
Disable: Counter reset/counter preset are not completed according to the designated Target Comparison Data Number.

Output Pattern of Range Comparison Read Data

Aggregated data for Output Pattern of Range Comparison Read Data.
When reading the target value setting, the subtraction match output pattern data of the Range Comparison Data Number specified by the Comparison Setting Data Number is stored.

Data Name	Data type	Default value	I/O Port Name	Index (hex)	Subindex (hex)
Output Pattern of Range Comparison Read Data	WORD	0000 hex	Output Pattern of Range Comparison Read Data	600F	01

The details of the Output Pattern of Range Comparison Read Data are given in the following table.

Bit	Data Name	Function *1	Data type	I/O Port Name
0	Output Pattern of Range Comparison Read Data External Output0 Enable	0: Disable 1: Enable	BOOL	External Output0 Enable of Range Comparison Read Data
1	Output Pattern of Range Comparison Read Data External Output1 Enable	0: Disable 1: Enable	BOOL	External Output1 Enable of Range Comparison Read Data
2	Output Pattern of Range Comparison Read Data External Output2 Enable	0: Disable 1: Enable	BOOL	External Output2 Enable of Range Comparison Read Data
3	Output Pattern of Range Comparison Read Data External Output3 Enable	0: Disable 1: Enable	BOOL	External Output3 Enable of Range Comparison Read Data
4	Output Pattern of Range Comparison Read Data External Output4 Enable	0: Disable 1: Enable	BOOL	External Output4 Enable of Range Comparison Read Data
5	Output Pattern of Range Comparison Read Data External Output5 Enable	0: Disable 1: Enable	BOOL	External Output5 Enable of Range Comparison Read Data
6 to 15	Reserved	---	---	---

*1. *Enable*: When the counter value is within the Range Comparison Data Number setting range, external output turns ON.
Disable: Output does not change according to the designated Range Comparison Data Number.

External Output0 PWM Status

Aggregated External Output0 PWM Status data.
Monitors PWM output status.

Data Name	Data type	Default value	I/O Port Name	Index (hex)	Subindex (hex)
External Output0 PWM Status	WORD	0000 hex	External Output0 PWM Status	6016	01

The details of External Output0 PWM Status are given in the following table.

Bit	Data Name	Function	Data type	I/O Port Name
0	External Output0 PWM Internal Setting Write Completed	This is the PWM operation command *PWM Output Internal Setting Write Execution* completed flag. 0→1: PWM output setting write execution is complete. 1→0: When PWM operation command *PWM Output Internal Setting Write Execution* is set to *0*, this bit is *0*.	BOOL	External Output0 PWM Internal Setting Write Completed
1	Reserved	---	---	---
2	External Output0 PWM Stop Completed	This is the PWM operation command *PWM Output Stop Execution* completed flag. 0→1: PWM output stop execution is complete. 1→0: When PWM operation command *PWM Output Stop Execution* is set to *0*, this bit is *0*.	BOOL	External Output0 PWM Stop Completed
3	External Output0 PWM Start Completed	This is the PWM operation command *PWM Output Execution Enabled* completed flag. 0→1: PWM output execution enabled is complete. 1→0: When PWM operation command *PWM Output Execution Enabled* is set to *0*, this bit is *0*.	BOOL	External Output0 PWM Start Completed
4	External Output0 PWM Active	1: PWM output is active. 0: PWM output is idle.	BOOL	External Output0 PWM Active
5 to 15	Reserved	---	---	---

External Output Status

Aggregated external output status data.

Data Name	Data type	Default value	I/O Port Name	Index (hex)	Subindex (hex)
External Output Status	WORD	0000 hex	External Output Status	6014	01

The details of External Output Status are given in the following table.

Bit	Data Name	Function	Data type	I/O Port Name
0	External Output0 Status	1: External output0 ON. 0: External output0 OFF.	BOOL	External Output0 Status
1	External Output1 Status	1: External output1 ON. 0: External output1 OFF.	BOOL	External Output1 Status
2	External Output2 Status	1: External output2 ON. 0: External output2 OFF.	BOOL	External Output2 Status
3	External Output3 Status	1: External output3 ON. 0: External output3 OFF.	BOOL	External Output3 Status
4	External Output4 Status	1: External output4 ON. 0: External output4 OFF.	BOOL	External Output4 Status
5	External Output5 Status	1: External output5 ON. 0: External output5 OFF.	BOOL	External Output5 Status
6 to 15	Reserved	---	---	---

Ch□ Counter Operation Commands

Aggregated Counter Operation Command data.

Data Name	Data type	Default value	I/O Port Name	Index (hex)	Subindex (hex)
Ch1 Counter Operation Command	WORD	0000 hex	Ch1 Counter Operation Command	7000	01
Ch2 Counter Operation Command			Ch2 Counter Operation Command		02
Ch3 Counter Operation Command			Ch3 Counter Operation Command		03
Ch4 Counter Operation Command			Ch4 Counter Operation Command		04
Ch5 Counter Operation Command			Ch5 Counter Operation Command		05
Ch6 Counter Operation Command			Ch6 Counter Operation Command		06

The details of Counter Operation Commands for Ch□ are given in the following table.

Bit	Data Name	Function	Data type	I/O Port Name
0	Counter Enable	1: Enable counter. 0: Stop counter.	BOOL	Ch□ Counter Enable
1	Internal Counter Reset Execution	0→1: Execute counter reset. 1→0: Reset the *Internal Counter Reset Completed* in the counter status to 0.	BOOL	Ch□ Internal Counter Reset Execution
2	Internal Counter Preset Execution	0→1: Execute counter preset. 1→0: Reset the *Internal Counter Preset Completed* in the counter status to 0.	BOOL	Ch□ Internal Counter Preset Execution
3	Reserved	---	---	---

Bit	Data Name	Function	Data type	I/O Port Name
4	Counter Latch1 Enable	1: Enable counter latch1. 0: Disable counter latch1.	BOOL	Ch□ Counter Latch1 Enable
5	Counter Latch2 Enable *1	1: Enable counter latch2. 0: Disable counter latch2.	BOOL	Ch□ Counter Latch2 Enable
6	Counter Latch1 Completed Flag Clear	0→1: Clear counter latch1 completed flag.	BOOL	Ch□ Counter Latch1 Completed Flag Clear
7	Counter Latch2 Completed Flag Clear *1	0→1: Clear counter latch2 completed flag.	BOOL	Ch□ Counter Latch2 Completed Flag Clear
8	External Input Counter Reset Completed Flag Clear	0→1: Clear counter reset completed flag through external input.	BOOL	Ch□ External Input Counter Reset Completed Flag Clear
9	Phase Z Counter Reset Completed Flag Clear *1	0→1: Clear counter reset completed flag through Z-phase.	BOOL	Ch□ Phase Z Counter Reset Completed Flag Clear
10	External Input Counter Preset Completed Flag Clear	0→1: Clear counter preset completed flag through external input.	BOOL	Ch□ External Input Counter Preset Completed Flag Clear
11	Target Comparison Counter Reset Completed Flag Clear *1	0→1: Clear counter reset completed flag through target comparison.	BOOL	Ch□ Target Comparison Counter Reset Completed Flag Clear
12	Target Comparison Counter Preset Completed Flag Clear *1	0→1: Clear counter preset completed flag through target comparison.	BOOL	Ch□ Target Comparison Counter Preset Completed Flag Clear
13	External Counter Reset Enable	0: Disable counter reset by external input, Z-phase, target comparison. 1: Enable counter reset by external input, Z-phase, target comparison.	BOOL	Ch□ External Counter Reset Enable
14	External Counter Preset Enable	0: Disable counter preset by external input or target comparison. 1: Enable counter preset by external input or target comparison.	BOOL	Ch□ External Counter Preset Enable
15	External Counter Reset Mode	0: When an external input, Z-phase, or target comparison counter reset request is generated, counter reset is constantly executed. 1: When an external input, Z-phase, or target comparison counter reset request is generated, counter reset is executed only once after being enabled.	BOOL	Ch□ External Counter Reset Mode

*1. In 6ch mode, this setting is disabled.

External Output Force ON/OFF Operation Command

Aggregated external output force ON/OFF operation command data.
Sets force ON/OFF Enable/Disable for each external output to bits 0 to 5. When bits 0 to 5 are enabled, it sets ON/OFF with bits 8 to 13.

Data Name	Data type	Default value	I/O Port Name	Index (hex)	Subindex (hex)
External Output Force ON/OFF Command	WORD	0000 hex	External Output Force ON/OFF Command	701A	01

The details of External Output Force ON/OFF Operation Command are given in the following table.

Bit	Data Name	Function	Data type	I/O Port Name
0	External Output0 Enables Force ON/OFF	0: Disable 1: Enable	BOOL	External Output0 Force ON/OFF Enable
1	External Output1 Enables Force ON/OFF	0: Disable 1: Enable	BOOL	External Output1 Force ON/OFF Enable
2	External Output2 Enables Force ON/OFF	0: Disable 1: Enable	BOOL	External Output2 Force ON/OFF Enable
3	External Output3 Enables Force ON/OFF	0: Disable 1: Enable	BOOL	External Output3 Force ON/OFF Enable
4	External Output4 Enables Force ON/OFF	0: Disable 1: Enable	BOOL	External Output4 Force ON/OFF Enable
5	External Output5 Enables Force ON/OFF	0: Disable 1: Enable	BOOL	External Output5 Force ON/OFF Enable
6 to 7	Reserved	---	---	---
8	External Output0 Force ON/OFF Setting	1: Output ON. 0: Output OFF.	BOOL	External Output0 Force ON/OFF Setting
9	External Output1 Force ON/OFF Setting	1: Output ON. 0: Output OFF.	BOOL	External Output1 Force ON/OFF Setting
10	External Output2 Force ON/OFF Setting	1: Output ON. 0: Output OFF.	BOOL	External Output2 Force ON/OFF Setting
11	External Output3 Force ON/OFF Setting	1: Output ON. 0: Output OFF.	BOOL	External Output3 Force ON/OFF Setting
12	External Output4 Force ON/OFF Setting	1: Output ON. 0: Output OFF.	BOOL	External Output4 Force ON/OFF Setting
13	External Output5 Force ON/OFF Setting	1: Output ON. 0: Output OFF.	BOOL	External Output5 Force ON/OFF Setting
14 to 15	Reserved	---	---	---

Ch1 Counter Log Operation Commands

Aggregated Counter Log Operation Command data for Ch1.

Data Name	Data type	Default value	I/O Port Name	Index (hex)	Subindex (hex)
Counter Log Operation Command	WORD	0000 hex	Ch1 Counter Log Operation Command	7001	01

The details of Counter Log Operation Commands for Ch1 are given in the following table.

Bit	Data Name	Function	Data type	I/O Port Name
0	Counter Log Enable	1: Enable counter log. 0: Disable counter log.	BOOL	Ch1 Counter Log Enable
1	Counter Log Read Execution	0→1: Execute counter log read. 1→0: Reset the *Counter Log Read Completed* in the counter log status to 0.	BOOL	Ch1 Counter Log Read Execution
2 to 15	Reserved	---	---	---

Ch□ Pulse Period Measurement Commands

Aggregated Pulse Period Measurement Command data.

Data Name	Data type	Default value	I/O Port Name	Index (hex)	Subindex (hex)
Ch1 Pulse Period Measurement Command	WORD	0000 hex	Ch1 Pulse Period Measurement Command	7008	01
Ch2 Pulse Period Measurement Command	WORD	0000 hex	Ch2 Pulse Period Measurement Command		02

Details on pulse period measurement commands are provided in the following table.

Bit	Data Name	Function	Data type	I/O Port Name
0	Pulse Period Measurement Enable*1	1: Pulse period measurement enable. 0: Pulse period measurement disable.	BOOL	Ch□ Pulse Period Measurement Enable
1	Pulse Period Measurement Value Clear*2	0→1: Pulse Period Measurement Value Clear.	BOOL	Ch□ Pulse Period Measurement Value Clear
2	Pulse Period Measurement Value Overflow Flag Clear *2	0→1: Pulse Period Measurement Value Overflow Flag Clear Execution.	BOOL	Ch□ Pulse Period Measurement Value Overflow Flag Clear
3 to 15	Reserved	---	---	---

*1. If the parameter **Ch□ Edge Detection Method** is set to 0, the function is disabled regardless of the status of this bit.
*2. This can be performed only when pulse period measurement is enabled.

Comparison Setting Commands

Aggregated comparison setting command data.

Data Name	Data type	Default value	I/O Port Name	Index (hex)	Subindex (hex)
Comparison Setting Command	WORD	0000 hex	Comparison Setting Command	700C	01

The details of Comparison Setting Commands are given in the following table.

Bit	Data Name	Function	Data type	I/O Port Name
0	Ch1 Comparison Setting Data Request	0→1: Execute Ch1 comparison data setting command. 1→0: Reset comparison setting status *Comparison Data Setting Completed* to 0.	BOOL	Ch1 Comparison Setting Data Request
1	Ch2 Comparison Setting Data Request	0→1: Execute Ch2 comparison data setting command. 1→0: Reset comparison setting status *Comparison Data Setting Completed* to 0.	BOOL	Ch2 Comparison Setting Data Request
2	Ch3 Comparison Setting Data Request*1	0→1: Execute Ch3 comparison data setting command. 1→0: Reset comparison setting status *Comparison Data Setting Completed* to 0.	BOOL	Ch3 Comparison Setting Data Request
3	Ch4 Comparison Setting Data Request*1	0→1: Execute Ch4 comparison data setting command. 1→0: Reset comparison setting status *Comparison Data Setting Completed* to 0.	BOOL	Ch4 Comparison Setting Data Request
4	Ch5 Comparison Setting Data Request*1	0→1: Execute Ch5 comparison data setting command. 1→0: Reset comparison setting status *Comparison Data Setting Completed* to 0.	BOOL	Ch5 Comparison Setting Data Request
5	Ch6 Comparison Setting Data Request*1	0→1: Execute Ch6 comparison data setting command. 1→0: Reset comparison setting status *Comparison Data Setting Completed* to 0.	BOOL	Ch6 Comparison Setting Data Request
6 to 14	Reserved	---	---	---
15	Comparison Data Setting Read or Write	0: Execute setting read. 1: Execute setting write.	BOOL	Comparison Setting Data Read or Write

*1. In 2ch mode, *Ch3 to Ch6 Comparison Setting Data Requests* are not in use.

Additional Information

Do not set multiple *Ch1 to Ch6 Comparison Setting Data Requests* simultaneously to *1*. If set simultaneously to *1*, the *Comparison Setting Status Comparison Setting Write Error Flag* will come ON when writing and the *Comparison Setting Read Error Flag* when reading.

pCV Crossing Output Pattern of Target Comparison Write Data

Aggregated data for pCV Crossing Output Pattern of Target Comparison Write Data.
During Present Counter Value addition, operation is set when the target value is matched.
When reading Target Comparison Data, the subtraction match output pattern of the Target Comparison Data Number specified by the Comparison Setting Data Number is stored.
Target comparison external output and counter reset/preset operation enable/disable are set with bits 0 to 7. When bits 0 to 7 are *enabled*, operation is set with bits 8 to 15.

Data Name	Data type	Default value	I/O Port Name	Index (hex)	Subindex (hex)
pCV Crossing Output Pattern of Target Comparison Write Data	WORD	0000 hex	pCV Crossing Output Pattern of Target Comparison Write Data	7013	01

The details of pCV Crossing Output Pattern of Target Comparison Write Data are given in the following table.

Bit	Data Name	Function	Data type	I/O Port Name
0	pCV Crossing Output Pattern of Target Comparison Write Data External Output0 Enable	0: Disable *1 1: Enable	BOOL	External Output0 Enable of pCV Crossing Write Data
1	pCV Crossing Output Pattern of Target Comparison Write Data External Output1 Enable	0: Disable *1 1: Enable	BOOL	External Output1 Enable of pCV Crossing Write Data
2	pCV Crossing Output Pattern of Target Comparison Write Data External Output2 Enable	0: Disable *1 1: Enable	BOOL	External Output2 Enable of pCV Crossing Write Data
3	pCV Crossing Output Pattern of Target Comparison Write Data External Output3 Enable	0: Disable *1 1: Enable	BOOL	External Output3 Enable of pCV Crossing Write Data
4	pCV Crossing Output Pattern of Target Comparison Write Data External Output4 Enable	0: Disable *1 1: Enable	BOOL	External Output4 Enable of pCV Crossing Write Data
5	pCV Crossing Output Pattern of Target Comparison Write Data External Output5 Enable	0: Disable *1 1: Enable	BOOL	External Output5 Enable of pCV Crossing Write Data
6	pCV Crossing Output Pattern of Target Comparison Write Data Ch1 Counter Reset Preset Enable	0: Disable *2 1: Enable	BOOL	Ch1 Counter Reset Preset Enable of pCV Crossing Write Data
7	pCV Crossing Output Pattern of Target Comparison Write Data Ch2 Counter Reset Preset Enable	0: Disable *2 1: Enable	BOOL	Ch2 Counter Reset Preset Enable of pCV Crossing Write Data
8	pCV Crossing Output Pattern of Target Comparison Write Data External Output0 Set or Reset	0: Reset when crossing the target. 1: Set when crossing the target.	BOOL	External Output0 Set or Reset of pCV Crossing Write Data
9	pCV Crossing Output Pattern of Target Comparison Write Data External Output1 Set or Reset	0: Reset when crossing the target. 1: Set when crossing the target.	BOOL	External Output1 Set or Reset of pCV Crossing Write Data

Bit	Data Name	Function	Data type	I/O Port Name
10	pCV Crossing Output Pattern of Target Comparison Write Data External Output2 Set or Reset	0: Reset when crossing the target. 1: Set when crossing the target.	BOOL	External Output2 Set or Reset of pCV Crossing Write Data
11	pCV Crossing Output Pattern of Target Comparison Write Data External Output3 Set or Reset	0: Reset when crossing the target. 1: Set when crossing the target.	BOOL	External Output3 Set or Reset of pCV Crossing Write Data
12	pCV Crossing Output Pattern of Target Comparison Write Data External Output4 Set or Reset	0: Reset when crossing the target. 1: Set when crossing the target.	BOOL	External Output4 Set or Reset of pCV Crossing Write Data
13	pCV Crossing Output Pattern of Target Comparison Write Data External Output5 Set or Reset	0: Reset when crossing the target. 1: Set when crossing the target.	BOOL	External Output5 Set or Reset of pCV Crossing Write Data
14	pCV Crossing Output Pattern of Target Comparison Write Data Ch1 Counter Reset or Preset	0: Execute counter reset when crossing the target. 1: Execute counter preset when crossing the target.	BOOL	Ch1 Counter Reset or Preset of pCV Crossing Write Data
15	pCV Crossing Output Pattern of Target Comparison Write Data Ch2 Counter Reset or Preset	0: Execute counter reset when crossing the target. 1: Execute counter preset when crossing the target.	BOOL	Ch2 Counter Reset or Preset of pCV Crossing Write Data

*1. *Enable*: When the target matches, external output is set or reset.
Disable: Output does not change according to the designated Target Comparison Data Number.

*2. *Enable*: When the target matches, counter reset or counter preset is executed.
Disable: Counter reset/counter preset are not completed according to the designated Target Comparison Data Number.

mCV Crossing Output Pattern of Target Comparison Write Data

Aggregated data for mCV Crossing Output Pattern of Target Comparison Write Data.
During Present Counter Value subtraction, operation is set when the target value is matched.
When writing Target Comparison Data, the subtraction match output pattern of the Target Comparison Data Number specified by the Comparison Setting Data Number is stored.
Target comparison external output and counter reset/preset operation enable/disable are set with bits 0 to 7. When bits 0 to 7 are *enabled*, operation is set with bits 8 to 15.

Data Name	Data type	Default value	I/O Port Name	Index (hex)	Subindex (hex)
mCV Crossing Output Pattern of Target Comparison Write Data	WORD	0000 hex	mCV Crossing Output Pattern of Target Comparison Write Data	7013	02

The details of mCV Crossing Output Pattern of Target Comparison Write Data are given in the following table.

Bit	Data Name	Function	Data type	I/O Port Name
0	mCV Crossing Output Pattern of Target Comparison Write Data External Output0 Enable	0: Disable *1 1: Enable	BOOL	External Output0 Enable of mCV Crossing Write Data
1	mCV Crossing Output Pattern of Target Comparison Write Data External Output1 Enable	0: Disable *1 1: Enable	BOOL	External Output1 Enable of mCV Crossing Write Data
2	mCV Crossing Output Pattern of Target Comparison Write Data External Output2 Enable	0: Disable *1 1: Enable	BOOL	External Output2 Enable of mCV Crossing Write Data
3	mCV Crossing Output Pattern of Target Comparison Write Data External Output3 Enable	0: Disable *1 1: Enable	BOOL	External Output3 Enable of mCV Crossing Write Data
4	mCV Crossing Output Pattern of Target Comparison Write Data External Output4 Enable	0: Disable *1 1: Enable	BOOL	External Output4 Enable of mCV Crossing Write Data
5	mCV Crossing Output Pattern of Target Comparison Write Data External Output5 Enable	0: Disable *1 1: Enable	BOOL	External Output5 Enable of mCV Crossing Write Data
6	mCV Crossing Output Pattern of Target Comparison Write Data Ch1 Counter Reset Preset Enable	0: Disable *2 1: Enable	BOOL	Ch1 Counter Reset Preset Enable of mCV Crossing Write Data
7	mCV Crossing Output Pattern of Target Comparison Write Data Ch2 Counter Reset Preset Enable	0: Disable *2 1: Enable	BOOL	Ch2 Counter Reset Preset Enable of mCV Crossing Write Data
8	mCV Crossing Output Pattern of Target Comparison Write Data External Output0 Set or Reset	0: Reset when crossing the target. 1: Set when crossing the target.	BOOL	External Output0 Set or Reset of mCV Crossing Write Data
9	mCV Crossing Output Pattern of Target Comparison Write Data External Output1 Set or Reset	0: Reset when crossing the target. 1: Set when crossing the target.	BOOL	External Output1 Set or Reset of mCV Crossing Write Data
10	mCV Crossing Output Pattern of Target Comparison Write Data External Output2 Set or Reset	0: Reset when crossing the target. 1: Set when crossing the target.	BOOL	External Output2 Set or Reset of mCV Crossing Write Data
11	mCV Crossing Output Pattern of Target Comparison Write Data External Output3 Set or Reset	0: Reset when crossing the target. 1: Set when crossing the target.	BOOL	External Output3 Set or Reset of mCV Crossing Write Data
12	mCV Crossing Output Pattern of Target Comparison Write Data External Output4 Set or Reset	0: Reset when crossing the target. 1: Set when crossing the target.	BOOL	External Output4 Set or Reset of mCV Crossing Write Data
13	mCV Crossing Output Pattern of Target Comparison Write Data External Output5 Set or Reset	0: Reset when crossing the target. 1: Set when crossing the target.	BOOL	External Output5 Set or Reset of mCV Crossing Write Data

Bit	Data Name	Function	Data type	I/O Port Name
14	mCV Crossing Output Pattern of Target Comparison Write Data Ch1 Counter Reset or Preset	0: Execute counter reset when crossing the target. 1: Execute counter preset when crossing the target.	BOOL	Ch1 Counter Reset or Preset of mCV Crossing Write Data
15	mCV Crossing Output Pattern of Target Comparison Write Data Ch2 Counter Reset or Preset	0: Execute counter reset when crossing the target. 1: Execute counter preset when crossing the target.	BOOL	Ch2 Counter Reset or Preset of mCV Crossing Write Data

*1. *Enable*: When the target matches, external output is set or reset.
Disable: Output does not change according to the designated Target Comparison Data Number.

*2. *Enable*: When the target matches, counter reset or counter preset is executed.
Disable: Counter reset/counter preset are not completed according to the designated Target Comparison Data Number.

Ch□ Counter Reset/Preset of Target Comparison Output Pattern

Aggregated Ch□ Counter Reset/Preset of Target Comparison Output Pattern data.
Sets external output operation when Ch□ Counter Reset/Preset are complete in target comparison mode.
In target comparison, when counter reset/preset are complete, external output operation enable/disable is displayed with bits 0 to 5. When *enabled*, operation is displayed with bits 8 to 15.
When operating in range comparison mode, this setting is disabled.

Data Name	Data type	Default value	I/O Port Name	Index (hex)	Subindex (hex)
Output Pattern at Ch1 Counter Reset/Preset of Target Comparison	WORD	0000 hex	Output Pattern at Ch1 Counter Reset/Preset of Target Comparison	701B	01
Output Pattern at Ch2 Counter Reset/Preset of Target Comparison			Output Pattern at Ch2 Counter Reset/Preset of Target Comparison		02

The details of the output pattern at Ch□ Counter Reset/Preset of Target Comparison are given in the following table.

Bit	Data Name	Function	Data type	I/O Port Name
0	At Ch□ Counter Reset/Preset of Target Comparison External Output0 Enable	0: Disable *1 1: Enable	BOOL	External Output0 Enable at Ch□ Counter Reset/Preset
1	At Ch□ Counter Reset/Preset of Target Comparison External Output1 Enable	0: Disable *1 1: Enable	BOOL	External Output1 Enable at Ch□ Counter Reset/Preset
2	At Ch□ Counter Reset/Preset of Target Comparison External Output2 Enable	0: Disable *1 1: Enable	BOOL	External Output2 Enable at Ch□ Counter Reset/Preset
3	At Ch□ Counter Reset/Preset of Target Comparison External Output3 Enable	0: Disable *1 1: Enable	BOOL	External Output3 Enable at Ch□ Counter Reset/Preset

Bit	Data Name	Function	Data type	I/O Port Name
4	At Ch☐ Counter Reset/Preset of Target Comparison External Output4 Enable	0: Disable *1 1: Enable	BOOL	External Output4 Enable at Ch☐ Counter Reset/Preset
5	At Ch☐ Counter Reset/Preset of Target Comparison External Output5 Enable	0: Disable *1 1: Enable	BOOL	External Output5 Enable at Ch☐ Counter Reset/Preset
6 to 7	Reserved	---	---	---
8	At Ch☐ Counter Reset/Preset of Target Comparison External Output0 Set/Reset	0: Reset 1: Set	BOOL	External Output0 Set or Reset at Ch ☐ Counter Reset/Preset
9	At Ch☐ Counter Reset/Preset of Target Comparison External Output1 Set/Reset	0: Reset 1: Set	BOOL	External Output1 Set or Reset at Ch ☐ Counter Reset/Preset
10	At Ch☐ Counter Reset/Preset of Target Comparison External Output2 Set/Reset	0: Reset 1: Set	BOOL	External Output2 Set or Reset at Ch ☐ Counter Reset/Preset
11	At Ch☐ Counter Reset/Preset of Target Comparison External Output3 Set/Reset	0: Reset 1: Set	BOOL	External Output3 Set or Reset at Ch ☐ Counter Reset/Preset
12	At Ch☐ Counter Reset/Preset of Target Comparison External Output4 Set/Reset	0: Reset 1: Set	BOOL	External Output4 Set or Reset at Ch ☐ Counter Reset/Preset
13	At Ch☐ Counter Reset/Preset of Target Comparison External Output5 Set/Reset	0: Reset 1: Set	BOOL	External Output5 Set or Reset at Ch ☐ Counter Reset/Preset
14 to 15	Reserved	---	---	---

*1. *Enable*: Sets or resets external output when Counter Reset/Preset are complete in target comparison mode.
Disable: Output does not change when Counter Reset/Preset are complete in target comparison mode.

Output Pattern of Range Comparison Write Data

Aggregated data for Output Pattern of Range Comparison Write Data.
Used in 2ch mode. Not used in 6ch mode.
In 2ch mode, the counter value sets the external output which turns ON when in the band comparison range. Multiple external outputs can also be set. When setting the corresponding bit to *Enabled*, the external output will turn ON.
In 6ch mode, the external outputs corresponding to each channel are fixed. Ch1 can only use external output0, Ch2 external output1, Ch3 external output2, Ch4 external output3, Ch5 external output4, and Ch6 external output5. Therefore, in 6ch mode, setting the output pattern is not required.

Data Name	Data type	Default value	I/O Port Name	Index (hex)	Subindex (hex)
Output Pattern of Range Comparison Write Data	WORD	0000 hex	Output Pattern of Range Comparison Write Data	700F	01

The details of the output pattern at Ch□ Counter Reset/Preset of Target Comparison are given in the following table.

Bit	Data Name	Function *1	Data type	I/O Port Name
0	Output Pattern of Range Comparison Write Data External Output0 Enable	0: Disable 1: Enable	BOOL	External Output0 Enable of Range Comparison Write Data
1	Output Pattern of Range Comparison Write Data External Output1 Enable	0: Disable 1: Enable	BOOL	External Output1 Enable of Range Comparison Write Data
2	Output Pattern of Range Comparison Write Data External Output2 Enable	0: Disable 1: Enable	BOOL	External Output2 Enable of Range Comparison Write Data
3	Output Pattern of Range Comparison Write Data External Output3 Enable	0: Disable 1: Enable	BOOL	External Output3 Enable of Range Comparison Write Data
4	Output Pattern of Range Comparison Write Data External Output4 Enable	0: Disable 1: Enable	BOOL	External Output4 Enable of Range Comparison Write Data
5	Output Pattern of Range Comparison Write Data External Output5 Enable	0: Disable 1: Enable	BOOL	External Output5 Enable of Range Comparison Write Data
6 to 15	Reserved	---	---	---

*1. *Enable*: When the counter value is within the Range Comparison Data Number setting range, external output turns ON.
Disable: Output does not change according to the designated Range Comparison Data Number.

Ch□ Comparison Setting Data Enable1

Aggregated Ch□ Comparison Setting Data Enable1 data.
Comparison operation will not be performed for comparison setting data when setting is disabled.
Sets Range Comparison Data0 to 15 or Target Comparison Data0 to 15 to Enable/Disable. When setting Range Comparison Data16 to 31 or Target Comparison Data16 to 31 to Enable/Disable, *Ch □ Comparison Setting Data Enable2* is used.
This setting is not used in 6ch mode. Use *Comparison Setting Data Enable 6ch mode*.

Data Name	Data type	Default value	I/O Port Name	Index (hex)	Subindex (hex)
Ch1 Comparison Setting Data Enable1	WORD	0000 hex	Ch1 Comparison Setting Data Enable1	7014	01
Ch2 Comparison Setting Data Enable1			Ch2 Comparison Setting Data Enable1		02

The details of Ch□ Comparison Setting Data Enable1 are given in the following table.

Bit	Data Name	Function	Data type	I/O Port Name
0	Ch□ Comparison Setting Data0 Enable	0: Disable 1: Enable	BOOL	Ch□ Comparison Setting Data0 Enable
1	Ch□ Comparison Setting Data1 Enable	0: Disable 1: Enable	BOOL	Ch□ Comparison Setting Data1 Enable
2	Ch□ Comparison Setting Data2 Enable	0: Disable 1: Enable	BOOL	Ch□ Comparison Setting Data2 Enable
3	Ch□ Comparison Setting Data3 Enable	0: Disable 1: Enable	BOOL	Ch□ Comparison Setting Data3 Enable
4	Ch□ Comparison Setting Data4 Enable	0: Disable 1: Enable	BOOL	Ch□ Comparison Setting Data4 Enable
5	Ch□ Comparison Setting Data5 Enable	0: Disable 1: Enable	BOOL	Ch□ Comparison Setting Data5 Enable
6	Ch□ Comparison Setting Data6 Enable	0: Disable 1: Enable	BOOL	Ch□ Comparison Setting Data6 Enable
7	Ch□ Comparison Setting Data7 Enable	0: Disable 1: Enable	BOOL	Ch□ Comparison Setting Data7 Enable
8	Ch□ Comparison Setting Data8 Enable	0: Disable 1: Enable	BOOL	Ch□ Comparison Setting Data8 Enable
9	Ch□ Comparison Setting Data9 Enable	0: Disable 1: Enable	BOOL	Ch□ Comparison Setting Data9 Enable
10	Ch□ Comparison Setting Data10 Enable	0: Disable 1: Enable	BOOL	Ch□ Comparison Setting Data10 Enable
11	Ch□ Comparison Setting Data11 Enable	0: Disable 1: Enable	BOOL	Ch□ Comparison Setting Data11 Enable
12	Ch□ Comparison Setting Data12 Enable	0: Disable 1: Enable	BOOL	Ch□ Comparison Setting Data12 Enable
13	Ch□ Comparison Setting Data13 Enable	0: Disable 1: Enable	BOOL	Ch□ Comparison Setting Data13 Enable
14	Ch□ Comparison Setting Data14 Enable	0: Disable 1: Enable	BOOL	Ch□ Comparison Setting Data14 Enable
15	Ch□ Comparison Setting Data15 Enable	0: Disable 1: Enable	BOOL	Ch□ Comparison Setting Data15 Enable

Ch□ Comparison Setting Data Enable2

Aggregated Ch□ Comparison Setting Data Enable1 data.
Comparison operation will not be performed for comparison setting data when setting is disabled.
Sets Range Comparison Data16 to 31 or Target Comparison Data16 to 31 to Enable/Disable. When setting Range Comparison Data0 to 15 or Target Comparison Data0 to 15 to Enable/Disable, *Ch □ Comparison Setting Data Enable1* is used.
This setting is not used in 6ch mode. Use *Comparison Setting Data Enable 6ch mode*.

Data Name	Data type	Default value	I/O Port Name	Index (hex)	Subindex (hex)
Ch1 Comparison Setting Data Enable2	WORD	0000 hex	Ch1 Comparison Setting Data Enable2	7014	03
Ch2 Comparison Setting Data Enable2			Ch2 Comparison Setting Data Enable2		04

The details of Ch□ Comparison Setting Data Enable2 are given in the following table.

Bit	Data Name	Function	Data type	I/O Port Name
0	Ch□ Comparison Setting Data16 Enable	0: Disable 1: Enable	BOOL	Ch□ Comparison Setting Data16 Enable
1	Ch□ Comparison Setting Data17 Enable	0: Disable 1: Enable	BOOL	Ch□ Comparison Setting Data17 Enable
2	Ch□ Comparison Setting Data18 Enable	0: Disable 1: Enable	BOOL	Ch□ Comparison Setting Data18 Enable
3	Ch□ Comparison Setting Data19 Enable	0: Disable 1: Enable	BOOL	Ch□ Comparison Setting Data19 Enable
4	Ch□ Comparison Setting Data20 Enable	0: Disable 1: Enable	BOOL	Ch□ Comparison Setting Data20 Enable
5	Ch□ Comparison Setting Data21 Enable	0: Disable 1: Enable	BOOL	Ch□ Comparison Setting Data21 Enable
6	Ch□ Comparison Setting Data22 Enable	0: Disable 1: Enable	BOOL	Ch□ Comparison Setting Data22 Enable
7	Ch□ Comparison Setting Data23 Enable	0: Disable 1: Enable	BOOL	Ch□ Comparison Setting Data23 Enable
8	Ch□ Comparison Setting Data24 Enable	0: Disable 1: Enable	BOOL	Ch□ Comparison Setting Data24 Enable
9	Ch□ Comparison Setting Data25 Enable	0: Disable 1: Enable	BOOL	Ch□ Comparison Setting Data25 Enable
10	Ch□ Comparison Setting Data26 Enable	0: Disable 1: Enable	BOOL	Ch□ Comparison Setting Data26 Enable
11	Ch□ Comparison Setting Data27 Enable	0: Disable 1: Enable	BOOL	Ch□ Comparison Setting Data27 Enable
12	Ch□ Comparison Setting Data28 Enable	0: Disable 1: Enable	BOOL	Ch□ Comparison Setting Data28 Enable
13	Ch□ Comparison Setting Data29 Enable	0: Disable 1: Enable	BOOL	Ch□ Comparison Setting Data29 Enable
14	Ch□ Comparison Setting Data30 Enable	0: Disable 1: Enable	BOOL	Ch□ Comparison Setting Data30 Enable
15	Ch□ Comparison Setting Data31 Enable	0: Disable 1: Enable	BOOL	Ch□ Comparison Setting Data31 Enable

Comparison Setting Data Enable: 6ch Mode

Aggregated Comparison Setting Data Enable data in 6ch mode.
Comparison operation will not be performed for comparison setting data when setting is disabled.
In 6ch mode, sets Range Comparison Data0 to Enable/Disable.
This setting is not used in 2ch mode. Use *Ch□ Comparison Setting Data Enable1* and *Ch □Comparison Setting Data Enable2*.

Data Name	Data type	Default value	I/O Port Name	Index (hex)	Subindex (hex)
Comparison Setting Data Enable 6ch Mode	WORD	0000 hex	Comparison Setting Data Enable for 6ch Mode	7016	01

The details of Comparison Setting Data Enable in 6ch mode are given in the following table.

Bit	Data Name	Function	Data type	I/O Port Name
0	Ch1 Comparison Setting Data0 Enable for 6ch Mode	0: Disable 1: Enable	BOOL	Ch1 Comparison Setting Data0 Enable for 6ch Mode
1	Ch2 Comparison Setting Data0 Enable for 6ch Mode	0: Disable 1: Enable	BOOL	Ch2 Comparison Setting Data0 Enable for 6ch Mode
2	Ch3 Comparison Setting Data0 Enable for 6ch Mode	0: Disable 1: Enable	BOOL	Ch3 Comparison Setting Data0 Enable for 6ch Mode
3	Ch4 Comparison Setting Data0 Enable for 6ch Mode	0: Disable 1: Enable	BOOL	Ch4 Comparison Setting Data0 Enable for 6ch Mode
4	Ch5 Comparison Setting Data0 Enable for 6ch Mode	0: Disable 1: Enable	BOOL	Ch5 Comparison Setting Data0 Enable for 6ch Mode
5	Ch6 Comparison Setting Data0 Enable for 6ch Mode	0: Disable 1: Enable	BOOL	Ch6 Comparison Setting Data0 Enable for 6ch Mode
6	Reserved	---	---	---

External Output0 PWM Operation Command

Aggregated external output0 PWM operation command data.

Data Name	Data type	Default value	I/O Port Name	Index (hex)	Subindex (hex)
External Output0 PWM Operation Command	WORD	0000 hex	External Output0 PWM Operation Command	7017	01

The details of External Output0 PWM Operation Command are given in the following table.

Bit	Data Name	Function	Data type	I/O Port Name
0	External Output0 PWM internal setting write execution.	0→1: Write external output0 PWM internal setting. 1→0: Reset external output0 PWM status *External Output0 PWM Internal Setting Write Completed* to 0.	BOOL	External Output0 PWM Internal Setting Write
1	Reserved	---	---	---
2	External Output0 PWM output stop execution.	0→1: Execute reset. 1→0: Reset PWM output status *External Output0 PWM Stop Completed* to 0.	BOOL	External Output0 PWM Stop
3	External Output0 PWM output execution enabled.	0→1: Execute set. 1→0: Reset external output □ PWM status *External Output0 PWM Start Completed* to 0.	BOOL	External Output0 PWM Start
4 to 15	Reserved	---	---	---

6-2 List of Settings

The followings are the setting descriptions, setting ranges, and default values of the functions that can be used in the High-speed Counter Units.
If you change any parameter that does not change until after the Unit is restarted, restart the NX Unit. The settings are reflected after the Unit is restarted.
It is not necessary to restart the NX Unit for parameters that are updated immediately. The settings are updated immediately after the new settings are transferred even if the NX Unit is not restarted.

Precautions for Safe Use

If you transfer parameters for Unit operation settings that are updated when the Unit is restarted after the settings are changed on the Sysmac Studio, the Unit will be restarted after the transfer is completed. Always sufficiently check the safety at the connected devices before you transfer the Unit operation settings.

The setting items are set with one of the following methods.
- Setting is done in the Unit operation settings of the Support Software.
- Set the relevant NX object with message communications such as dedicated commands.

The method to access NX objects through instructions or other messages depends on where the NX Unit is connected.
If the NX Unit is connected to a CPU Unit, access is possible with the Read NX Unit Object instruction and the Write NX Unit Object instruction of the NJ/NX-series Controller. When the NX Unit is connected to a Communications Coupler Unit, the method depends on the connected Communications Coupler Unit or communications master.
Refer to the user's manual for the connected Communications Coupler Unit for method to use messages to access NX objects on Slave Terminals.

6-2-1 Counter Mode Switching Function Parameters

The Counter Mode switching function parameters are given in the following table.

Setting name	Description	Default value	Setting range	Unit	Index number (hex)	Subindex number (hex)	Update timing	Sections
Counter Mode	Set this object to the Counter Mode. 0: 2ch mode. 1: 6ch mode.	0	0/1	---	5000	01	After the Unit is restarted	*7-2 Counter Mode Switching Function* on page 7-12

6-2-2 Counter Function Parameters

The Counter Mode switching function parameters are given in the following table.

Setting name	Description	Default value	Setting range	Unit	Index number (hex)	Subindex number (hex)	Update timing	Sections
Ch1 Counter Noise Filter (For NX-CT2120/CT2220)	Sets the Counter Noise Filter. 1: 250 kHz 2: 200 kHz 3: 100 kHz 4: 50 kHz 5: 20 kHz 6: 10 kHz 7: 5 kHz 8: 2 kHz 9: 1 kHz 10: 500 Hz 11: 200 Hz 12: 100 Hz	4	1 to 12	---	5007	01	After the Unit is restarted	*7-3-1 Counter Noise Filter* on page 7-15
Ch2 Counter Noise Filter (For NX-CT2120/CT2220)						02		
Ch1 Counter Noise Filter (For NX-CT2320/CT2420)	Sets the Counter Noise Filter. 0: 1 MHz 1: 500 kHz 2: 200 kHz 3: 100 kHz 4: 50 kHz 5: 20 kHz 6: 10 kHz 7: 5 kHz 8: 2 kHz 9: 1 kHz 10: 500 Hz 11: 200 Hz 12: 100 Hz	4	0 to 12	---	5007	01		
Ch2 Counter Noise Filter (For NX-CT2320/CT2420)						02		
Counter Noise Filter (6ch Mode)	Sets the Counter Noise Filter. 0: 100 kHz 1: 50 kHz 2: 20 kHz 3: 10 kHz 4: 5 kHz 5: 2 kHz 6: 1 kHz 7: 500 Hz 8: 200 Hz 9: 100 Hz	1	0 to 9	---	5007	03	After the Unit is restarted	

Setting name	Description	Default value	Setting range	Unit	Index number (hex)	Subindex number (hex)	Update timing	Sections
Ch1 Pulse Input Method	Sets the Pulse Input Method. 0: Phase differential pulse x1. 1: Phase differential pulse x2. 2: Phase differential pulse x4. 3: Pulse + direction. 4: Up and down pulses.	2	0 to 4	---	5004	01	After the Unit is restarted	*7-3-2 Pulse Input Method* on page 7-19
Ch2 Pulse Input Method						02		
Ch1 Count Direction	Sets the Count Direction. 0: Positive direction of phase A. 1: Positive direction of phase B.	0	0/1	---	5005	01	After the Unit is restarted	*7-3-3 Count Direction* on page 7-23
Ch2 Count Direction						02		
Ch1 Counter Type	Set this object to the counter type. 0: Ring counter. 1: Linear counter.	0	0/1	---	5001	01	After the Unit is restarted	*7-3-4 Counter Types* on page 7-26
Ch2 Counter Type						02		
Ch3 Counter Type						03		
Ch4 Counter Type						04		
Ch5 Counter Type						05		
Ch6 Counter Type						06		
Ch1 Maximum Counter Value	Set this object to the maximum value of the counter.	214748364747	1 to 2147483647	---	5002	01	After the Unit is restarted	
Ch2 Maximum Counter Value						02		
Ch3 Maximum Counter Value						03		
Ch4 Maximum Counter Value						04		
Ch5 Maximum Counter Value						05		
Ch6 Maximum Counter Value						06		

Setting name	Description	Default value	Setting range	Unit	Index number (hex)	Subindex number (hex)	Update timing	Sections
Ch1 Minimum Counter Value	Set this object to the minimum value of the counter.	-2147483648	-2147483648 to 0	---	5003	01	After the Unit is restarted	
Ch2 Minimum Counter Value						02		
Ch3 Minimum Counter Value						03		
Ch4 Minimum Counter Value						04		
Ch5 Minimum Counter Value						05		
Ch6 Minimum Counter Value						06		
Ch1 External Input0 Gate control Enable/Disable Setting	Sets Ch1 gate control with external input0 to 5. 0: Function not allocated. 1: Gate open at ON/gate closed at OFF. 2: Gate closed at ON/gate open at OFF.	0	0 to 2	---	5008	01	After the Unit is restarted	*7-3-5 Gate control* on page 7-28
Ch1 External Input1 Gate control Enable/Disable Setting						07		
Ch1 External Input2 Gate control Enable/Disable Setting						0D		
Ch1 External Input3 Gate control Enable/Disable Setting						13		
Ch1 External Input4 Gate control Enable/Disable Setting						19		
Ch1 External Input5 Gate control Enable/Disable Setting						1F		

Setting name	Description	Default value	Setting range	Unit	Index number (hex)	Subindex number (hex)	Update timing	Sections
Ch1 External Input0 Reset Execution Conditions Setting	Sets Ch1 Counter Reset Execution Setting with external input0 to 5. 0: Function not allocated. 1: Executed at rising edge. 2: Executed at falling edge. 3: Executed at both edges.	0	0 to 3	---	5008	02	After the Unit is restarted	*7-3-6 Counter reset* on page 7-30
Ch1 External Input1 Reset Execution Conditions Setting						08		
Ch1 External Input2 Reset Execution Conditions Setting						0E		
Ch1 External Input3 Reset Execution Conditions Setting						14		
Ch1 External Input4 Reset Execution Conditions Setting						1A		
Ch1 External Input5 Reset Execution Conditions Setting						20		

Setting name	Description	Default value	Setting range	Unit	Index number (hex)	Subindex number (hex)	Update timing	Sections
Ch1 External Input0 Preset Execution Conditions Setting	Sets Ch1 Counter Preset Execution Setting with external input0 to 5. 0: Function not allocated. 1: Executed at rising edge. 2: Executed at falling edge. 3: Executed at both edges.	0	0 to 3	---	5008	03	After the Unit is restarted	*7-3-7 Counter Preset* on page 7-35
Ch1 External Input1 Preset Execution Conditions Setting						09		
Ch1 External Input2 Preset Execution Conditions Setting						0F		
Ch1 External Input3 Preset Execution Conditions Setting						15		
Ch1 External Input4 Preset Execution Conditions Setting						1B		
Ch1 External Input5 Preset Execution Conditions Setting						21		

Setting name	Description	Default value	Setting range	Unit	Index number (hex)	Subindex number (hex)	Update timing	Sections
Ch1 External Input0 Latch1 Execution Conditions Setting	Sets Ch1 Counter Latch1 Execution Setting with external input0 to 5. 0: Function not allocated. 1: Executed at rising edge. 2: Executed at falling edge. 3: Executed at both edges.	0	0 to 3	---	5008	04	After the Unit is restarted	*7-3-8 Counter Latch* on page 7-40
Ch1 External Input1 Latch1 Execution Conditions Setting						0A		
Ch1 External Input2 Latch1 Execution Conditions Setting						10		
Ch1 External Input3 Latch1 Execution Conditions Setting						16		
Ch1 External Input4 Latch1 Execution Conditions Setting						1C		
Ch1 External Input5 Latch1 Execution Conditions Setting						22		

Setting name	Description	Default value	Setting range	Unit	Index number (hex)	Subindex number (hex)	Update timing	Sections
Ch1 External Input0 Latch2 Execution Conditions Setting	Sets Ch1 Counter Latch2 Execution Setting with external input0 to 5. 0: Function not allocated. 1: Executed at rising edge. 2: Executed at falling edge. 3: Executed at both edges.	0	0 to 3	---	5008	05	After the Unit is restarted	*7-3-8 Counter Latch* on page 7-40
Ch1 External Input1 Latch2 Execution Conditions Setting						0B		
Ch1 External Input2 Latch2 Execution Conditions Setting						11		
Ch1 External Input3 Latch2 Execution Conditions Setting						17		
Ch1 External Input4 Latch2 Execution Conditions Setting						1D		
Ch1 External Input5 Latch2 Execution Conditions Setting						23		

Setting name	Description	Default value	Setting range	Unit	Index number (hex)	Subindex number (hex)	Update timing	Sections
Ch1 External Input0 Counter Log Enable Setting	Sets Ch1 Counter Log Enable/Disable Setting with external input0 to 5. 0: Function not allocated. 1: Enable at ON. 2: Enable at OFF.	0	0 to 2	---	5008	06	After the Unit is restarted	*7-3-9 Counter Log Function* on page 7-44
Ch1 External Input1 Counter Log Enable Setting						0C		
Ch1 External Input2 Counter Log Enable Setting						12		
Ch1 External Input3 Counter Log Enable Setting						18		
Ch1 External Input4 Counter Log Enable Setting						1E		
Ch1 External Input5 Counter Log Enable Setting						24		

Setting name	Description	Default value	Setting range	Unit	Index number (hex)	Subindex number (hex)	Update timing	Sections
Ch2 External Input0 Gate control Enable/Disable Setting	Sets Ch2 gate control with external input0 to 5. 0: Function not allocated. 1: Gate open at ON/gate closed at OFF. 2: Gate closed at ON/gate open at OFF.	0	0 to 2	---	5009	01	After the Unit is restarted	*7-3-5 Gate control* on page 7-28
Ch2 External Input1 Gate control Enable/Disable Setting						06		
Ch2 External Input2 Gate control Enable/Disable Setting						0B		
Ch2 External Input3 Gate control Enable/Disable Setting						10		
Ch2 External Input4 Gate control Enable/Disable Setting						15		
Ch2 External Input5 Gate control Enable/Disable Setting						1A		

Setting name	Description	Default value	Setting range	Unit	Index number (hex)	Subindex number (hex)	Update timing	Sections
Ch2 External Input0 Reset Execution Conditions Setting	Sets Ch2 Counter Reset Execution Setting with external input0 to 5. 0: Function not allocated. 1: Executed at rising edge. 2: Executed at falling edge. 3: Executed at both edges.	0	0 to 3	---	5009	02	After the Unit is restarted	*7-3-6 Counter reset* on page 7-30
Ch2 External Input1 Reset Execution Conditions Setting						07		
Ch2 External Input2 Reset Execution Conditions Setting						0C		
Ch2 External Input3 Reset Execution Conditions Setting						11		
Ch2 External Input4 Reset Execution Conditions Setting						16		
Ch2 External Input5 Reset Execution Conditions Setting						1B		

Setting name	Description	Default value	Setting range	Unit	Index number (hex)	Subindex number (hex)	Update timing	Sections
Ch2 External Input0 Preset Execution Conditions Setting	Sets Ch2 Counter Preset Execution Setting with external input0 to 5. 0: Function not allocated. 1: Executed at rising edge. 2: Executed at falling edge. 3: Executed at both edges.	0	0 to 3	---	5009	03	After the Unit is restarted	*7-3-7 Counter Preset* on page 7-35
Ch2 External Input1 Preset Execution Conditions Setting						08		
Ch2 External Input2 Preset Execution Conditions Setting						0D		
Ch2 External Input3 Preset Execution Conditions Setting						12		
Ch2 External Input4 Preset Execution Conditions Setting						17		
Ch2 External Input5 Preset Execution Conditions Setting						1C		

Setting name	Description	Default value	Setting range	Unit	Index number (hex)	Subindex number (hex)	Update timing	Sections
Ch2 External Input0 Latch1 Execution Conditions Setting	Sets Ch2 Counter Latch1 Execution Setting with external input0 to 5. 0: Function not allocated. 1: Executed at rising edge. 2: Executed at falling edge. 3: Executed at both edges.	0	0 to 3	---	5009	04	After the Unit is restarted	*7-3-8 Counter Latch* on page 7-40
Ch2 External Input1 Latch1 Execution Conditions Setting						09		
Ch2 External Input2 Latch1 Execution Conditions Setting						0E		
Ch2 External Input3 Latch1 Execution Conditions Setting						13		
Ch2 External Input4 Latch1 Execution Conditions Setting						18		
Ch2 External Input5 Latch1 Execution Conditions Setting						1D		

Setting name	Description	Default value	Setting range	Unit	Index number (hex)	Subindex number (hex)	Update timing	Sections
Ch2 External Input0 Latch2 Execution Conditions Setting	Sets Ch2 Counter Latch2 Execution Setting with external input0 to 5. 0: Function not allocated. 1: Executed at rising edge. 2: Executed at falling edge. 3: Executed at both edges.	0	0 to 3	---	5009	05	After the Unit is restarted	*7-3-8 Counter Latch* on page 7-40
Ch2 External Input1 Latch2 Execution Conditions Setting						0A		
Ch2 External Input2 Latch2 Execution Conditions Setting						0F		
Ch2 External Input3 Latch2 Execution Conditions Setting						14		
Ch2 External Input4 Latch2 Execution Conditions Setting						19		
Ch2 External Input5 Latch2 Execution Conditions Setting						1E		

Setting name	Description	Default value	Setting range	Unit	Index number (hex)	Subindex number (hex)	Update timing	Sections
Ch3 External Input2 Reset Execution Conditions Setting	Sets Ch3 Counter Reset Execution Setting with external input2. 0: Function not allocated. 1: Executed at rising edge. 2: Executed at falling edge. 3: Executed at both edges.	0	0 to 3	---	500A	01	After the Unit is restarted	*7-3-6 Counter reset* on page 7-30
Ch3 External Input2 Preset Execution Conditions Setting	Sets Ch3 Counter Preset Execution Setting with external input2. 0: Function not allocated. 1: Executed at rising edge. 2: Executed at falling edge. 3: Executed at both edges.	0	0 to 3	---		02		*7-3-7 Counter Preset* on page 7-35
Ch3 External Input2 Latch1 Execution Conditions Setting	Sets Ch3 Counter Latch1 Execution Setting with external input2. 0: Function not allocated. 1: Executed at rising edge. 2: Executed at falling edge. 3: Executed at both edges.	0	0 to 3	---		03		*7-3-8 Counter Latch* on page 7-40
Ch4 External Input3 Reset Execution Conditions Setting	Sets Ch4 Counter Reset Execution Setting with external input3. 0: Function not allocated. 1: Executed at rising edge. 2: Executed at falling edge. 3: Executed at both edges.	0	0 to 3	---		04		*7-3-6 Counter reset* on page 7-30
Ch4 External Input3 Preset Execution Conditions Setting	Sets Ch4 Counter Preset Execution Setting with external input3. 0: Function not allocated. 1: Executed at rising edge. 2: Executed at falling edge. 3: Executed at both edges.	0	0 to 3	---		05		*7-3-7 Counter Preset* on page 7-35
Ch4 External Input3 Latch1 Execution Conditions Setting	Sets Ch4 Counter Latch1 Execution Setting with external input3. 0: Function not allocated. 1: Executed at rising edge. 2: Executed at falling edge. 3: Executed at both edges.	0	0 to 3	---		06		*7-3-8 Counter Latch* on page 7-40
Ch5 External Input4 Reset Execution Conditions Setting	Sets Ch5 Counter Reset Execution Setting with external input4. 0: Function not allocated. 1: Executed at rising edge. 2: Executed at falling edge. 3: Executed at both edges.	0	0 to 3	---		07		*7-3-6 Counter reset* on page 7-30

Setting name	Description	Default value	Setting range	Unit	Index number (hex)	Subindex number (hex)	Update timing	Sections
Ch5 External Input4 Preset Execution Conditions Setting	Sets Ch5 Counter Preset Execution Setting with external input4. 0: Function not allocated. 1: Executed at rising edge. 2: Executed at falling edge. 3: Executed at both edges.	0	0 to 3	---	500A	08	After the Unit is restarted	*7-3-7 Counter Preset* on page 7-35
Ch5 External Input4 Latch1 Execution Conditions Setting	Sets Ch5 Counter Latch1 Execution Setting with external input4. 0: Function not allocated. 1: Executed at rising edge. 2: Executed at falling edge. 3: Executed at both edges.	0	0 to 3	---		09		*7-3-8 Counter Latch* on page 7-40
Ch6 External Input5 Reset Execution Conditions Setting	Sets Ch6 Counter Reset Execution Setting with external input5. 0: Function not allocated. 1: Executed at rising edge. 2: Executed at falling edge. 3: Executed at both edges.	0	0 to 3	---		0A		*7-3-6 Counter reset* on page 7-30
Ch6 External Input5 Preset Execution Conditions Setting	Sets Ch6 Counter Preset Execution Setting with external input5. 0: Function not allocated. 1: Executed at rising edge. 2: Executed at falling edge. 3: Executed at both edges.	0	0 to 3	---		0B		*7-3-7 Counter Preset* on page 7-35
Ch6 External Input5 Latch1 Execution Conditions Setting	Sets Ch6 Counter Latch1 Execution Setting with external input5. 0: Function not allocated. 1: Executed at rising edge. 2: Executed at falling edge. 3: Executed at both edges.	0	0 to 3	---		0C		*7-3-8 Counter Latch* on page 7-40
Counter Log Mode	Select Counter Log Mode. 0: Latch Log mode. 1: Cyclic Log mode.	0	0/1	---	5000	03	After the Unit is restarted	*7-3-9 Counter Log Function* on page 7-44
Counter Log Cycle Time Setting	Set Counter Log cycle time setting.	1000	1 to 65535	μs	501B	01	After the Unit is restarted	

Setting name	Description	Default value	Setting range	Unit	Index number (hex)	Subindex number (hex)	Update timing	Sections
Ch1 Time Window	Sets this object to the time window for pulse rate measurement.	0	0 to 65535	ms	5006	01	Immediately	*7-3-10 Pulse Rate Measurement Function* on page 7-49
Ch2 Time Window						02		
Ch3 Time Window						03		
Ch4 Time Window						04		
Ch5 Time Window						05		
Ch6 Time Window						06		
Ch1 Edge Detection Method	Sets the edge detection method for pulse period measurement. 0: Disable the function. 1: Measure every rising edge. 2: Measure every falling edge. 3: Measure every rising and falling edge.	0	0 to 4	---	500B	01	After the Unit is restarted	*7-3-11 Pulse Period Measurement Function* on page 7-50
Ch2 Edge Detection Method						02		

6-2-3 External Input Function Parameters

The external input function parameters are given in the following table.

Setting name	Description	Default value	Setting range	Unit	Index number (hex)	Subindex number (hex)	Update timing	Sections
External Input Noise Filter	Sets the time constant for external input0 to 5 noise filter. 0: 1 μs 1: 5 μs 2: 10 μs 3: 50 μs 4: 100 μs 5: 500 μs 6: 1 ms 7: 5 ms 8: 10 ms	3	0 to 8	---	500E	01	After the Unit is restarted	*7-4-1 External Input Noise Filter* on page 7-55

6-2-4 Comparison Function Parameters

The comparison function parameters are given in the following table.

Setting name	Description	Default value	Setting range	Unit	Index number (hex)	Subindex number (hex)	Update timing	Sections
Comparison Function Mode	Sets Comparison Mode in 2ch mode. 0: Target comparison mode. 1: Range comparison mode.	0	0/1	---	5000	02	After the Unit is restarted	*7-5-1 Comparison Function Mode Switching* on page 7-59
Ch1 Target Comparison Data0 Initial Target Value	Sets initial value for Ch1 Target Comparison Data0.	0	-2147483648 to 2147483647	---	5011	01	After the Unit is restarted	*7-5-2 Target Comparison* on page 7-61
Ch1 Target Comparison Data0 Initial Advance Time		0	0 to 65535	μs	5012	01		
Ch1 Target Comparison Data0 Initial pCV Output Pattern		0000 hex	0000 to FFFF hex	---	5013	01		
Ch1 Target Comparison Data0 Initial mCV Output Pattern		0000 hex	0000 to FFFF hex	---		09		
Ch1 Target Comparison Data1 Initial Target Value	Sets initial value for Ch1 Target Comparison Data1.	0	-2147483648 to 2147483647	---	5011	02		
Ch1 Target Comparison Data1 Initial Advance Time		0	0 to 65535	μs	5012	02		
Ch1 Target Comparison Data1 Initial pCV Output Pattern		0000 hex	0000 to FFFF hex	---	5013	02		
Ch1 Target Comparison Data1 Initial mCV Output Pattern		0000 hex	0000 to FFFF hex	---		0A		

Setting name	Description	Default value	Setting range	Unit	Index number (hex)	Subindex number (hex)	Update timing	Sections
Ch1 Target Comparison Data2 Initial Target Value	Sets initial value for Ch1 Target Comparison Data2.	0	-2147483648 to 2147483647	---	5011	03	After the Unit is restarted	*7-5-2 Target Comparison* on page 7-61
Ch1 Target Comparison Data2 Initial Advance Time		0	0 to 65535	μs	5012	03		
Ch1 Target Comparison Data2 Initial pCV Output Pattern		0000 hex	0000 to FFFF hex	---	5013	03		
Ch1 Target Comparison Data2 Initial mCV Output Pattern		0000 hex	0000 to FFFF hex	---		0B		
Ch1 Target Comparison Data3 Initial Target Value	Sets initial value for Ch1 Target Comparison Data3.	0	-2147483648 to 2147483647	---	5011	04		
Ch1 Target Comparison Data3 Initial Advance Time		0	0 to 65535	μs	5012	04		
Ch1 Target Comparison Data3 Initial pCV Output Pattern		0000 hex	0000 to FFFF hex	---	5013	04		
Ch1 Target Comparison Data3 Initial mCV Output Pattern		0000 hex	0000 to FFFF hex	---		0C		

Setting name	Description	Default value	Setting range	Unit	Index number (hex)	Subindex number (hex)	Update timing	Sections
Ch2 Target Comparison Data0 Initial Target Value	Sets initial value for Ch2 Target Comparison Data0.	0	-2147483648 to 2147483647	---	5011	05	After the Unit is restarted	*7-5-2 Target Comparison* on page 7-61
Ch2 Target Comparison Data0 Initial Advance Time		0	0 to 65535	μs	5012	05		
Ch2 Target Comparison Data0 Initial pCV Output Pattern		0000 hex	0000 to FFFF hex	---	5013	05		
Ch2 Target Comparison Data0 Initial mCV Output Pattern		0000 hex	0000 to FFFF hex	---		0D		
Ch2 Target Comparison Data1 Initial Target Value	Sets initial value for Ch2 Target Comparison Data1.	0	-2147483648 to 2147483647	---	5011	06		
Ch2 Target Comparison Data1 Initial Advance Time		0	0 to 65535	μs	5012	06		
Ch2 Target Comparison Data1 Initial pCV Output Pattern		0000 hex	0000 to FFFF hex	---	5013	06		
Ch2 Target Comparison Data1 Initial mCV Output Pattern		0000 hex	0000 to FFFF hex	---		0E		

Setting name	Description	Default value	Setting range	Unit	Index number (hex)	Subindex number (hex)	Update timing	Sections
Ch2 Target Comparison Data2 Initial Target Value	Sets initial value for Ch2 Target Comparison Data2.	0	-2147483648 to 2147483647	---	5011	07	After the Unit is restarted	*7-5-2 Target Comparison* on page 7-61
Ch2 Target Comparison Data2 Initial Advance Time		0	0 to 65535	μs	5012	07		
Ch2 Target Comparison Data2 Initial pCV Output Pattern		0000 hex	0000 to FFFF hex	---	5013	07		
Ch2 Target Comparison Data2 Initial mCV Output Pattern		0000 hex	0000 to FFFF hex	---		0F		
Ch2 Target Comparison Data3 Initial Target Value	Sets initial value for Ch2 Target Comparison Data3.	0	-2147483648 to 2147483647	---	5011	08		
Ch2 Target Comparison Data3 Initial Advance Time		0	0 to 65535	μs	5012	08		
Ch2 Target Comparison Data3 Initial pCV Output Pattern		0000 hex	0000 to FFFF hex	---	5013	08		
Ch2 Target Comparison Data3 Initial mCV Output Pattern		0000 hex	0000 to FFFF hex	---		10		

Setting name	Description	Default value	Setting range	Unit	Index number (hex)	Subindex number (hex)	Update timing	Sections
Advance Time Range Setting	Sets time range for measurement of count values per 1 μs. 0: 0.256 ms 1: 0.512 ms 2: 1.024 ms 3: 2.048 ms 4: 4.096 ms 5: 8.192 ms 6: 16.384 ms 7: 32.768 ms 8: 65.536 ms 9: 131.072 ms 10: 524.288 ms 11: 2097.152 ms 12: 8388.608 ms	8	0 to 12	---	5010	01	After the Unit is restarted	*7-5-2 Target Comparison* on page 7-61
Ch1 Range Comparison Data0 Initial Lower Limit Value	Sets initial value for Ch1 Range Comparison Data0.	0	-2147483648 to 2147483647	---	501C	01	After the Unit is restarted	*7-5-3 2ch mode Range Comparison* on page 7-75 *7-5-4 6ch mode Range Comparison* on page 7-86
Ch1 Range Comparison Data0 Initial Upper Limit Value		0	-2147483648 to 2147483647	---		02		
Ch1 Range Comparison Data0 Initial Output Pattern		0000 hex	0000 to 003F hex	---		03		
Ch2 Range Comparison Data0 Initial Lower Limit Value	Sets initial value for Ch2 Range Comparison Data0.	0	-2147483648 to 2147483647	---		04		
Ch2 Range Comparison Data0 Initial Upper Limit Value		0	-2147483648 to 2147483647	---		05		
Ch2 Range Comparison Data0 Initial Output Pattern		0000 hex	0000 to 003F hex	---		06		

Setting name	Description	Default value	Setting range	Unit	Index number (hex)	Subindex number (hex)	Update timing	Sections
Ch3 Range Comparison Data0 Initial Lower Limit Value	Sets initial value for Ch3 Range Comparison Data0.	0	-2147483648 to 2147483647	---	501C	07	After the Unit is restarted	*7-5-4 6ch mode Range Comparison* on page 7-86
Ch3 Range Comparison Data0 Initial Upper Limit Value		0	-2147483648 to 2147483647	---		08		
Ch4 Range Comparison Data0 Initial Lower Limit Value	Sets initial value for Ch4 Range Comparison Data0.	0	-2147483648 to 2147483647	---		09		
Ch4 Range Comparison Data0 Initial Upper Limit Value		0	-2147483648 to 2147483647	---		0A		

Setting name	Description	Default value	Setting range	Unit	Index number (hex)	Subindex number (hex)	Update timing	Sections
Ch5 Range Comparison Data0 Initial Lower Limit Value	Sets initial value for Ch5 Range Comparison Data0.	0	-2147483648 to 2147483647	---	501C	0B	After the Unit is restarted	*7-5-4 6ch mode Range Comparison* on page 7-86
Ch5 Range Comparison Data0 Initial Upper Limit Value		0	-2147483648 to 2147483647	---		0C		
Ch6 Range Comparison Data0 Initial Lower Limit Value	Sets initial value for Ch6 Range Comparison Data0.	0	-2147483648 to 2147483647	---		0D		
Ch6 Range Comparison Data0 Initial Upper Limit Value		0	-2147483648 to 2147483647	---		0E		
Ch1 Hysteresis Data for Range Comparison Mode	Sets hysteresis width in 2ch mode range comparison. 0: No hysteresis. 1 to 255: Hysteresis width.	0	0 to 255	---	5014	01		*7-5-3 2ch mode Range Comparison* on page 7-75
Ch2 Hysteresis Data for Range Comparison Mode						02		

Setting name	Description	Default value	Setting range	Unit	Index number (hex)	Subindex number (hex)	Update timing	Sections
External Output0 Inter-Channel Logical Setting for Range Comparison Mode	In 2ch mode range comparison, sets operation when output by Ch1 and Ch2 counter range comparison is allocated to the same external output. 0: OR setting. 1: AND setting.	0	0/1	---	5015	01	After the Unit is restarted	*7-5-3 2ch mode Range Comparison* on page 7-75
External Output1 Inter-Channel Logical Setting for Range Comparison Mode						02		
External Output2 Inter-Channel Logical Setting for Range Comparison Mode						03		
External Output3 Inter-Channel Logical Setting for Range Comparison Mode						04		
External Output4 Inter-Channel Logical Setting for Range Comparison Mode						05		
External Output5 Inter-Channel Logical Setting for Range Comparison Mode						06		

6-2-5 External Output Function Parameters

The external output function parameters are given in the following table.

Setting name	Description	Default value	Setting range	Unit	Index number (hex)	Subindex number (hex)	Update timing	Sections
External Output0 Pulse ON-Delay Time	Sets the external output0 to 1 ON-delay time with Target Comparison and Range Comparison.	0	0 to 50	ms	5016	01	After the Unit is restarted	*7-6-1 Output Delay Function* on page 7-90
External Output1 Pulse ON-Delay Time						02		
External Output0 Pulse Duration Time	Sets the external output0 to 1 ON duration with Target Comparison and Range Comparison.	0	0 to 50	ms	5017	01		
External Output1 Pulse Duration Time						02		
External Output0 Function Setting	Select from external output0 functions. 0: Target comparison output. 1: PWM output.	0	0/1	---	5018	01	After the Unit is restarted	*7-6-2 PWM Output Function* on page 7-93
External Output0 PWM Unit Setting	Sets PWM output frequency unit. 0: Frequency unit 0.1 Hz. 1: Frequency unit 1 Hz.	0	0/1	---	5019	01		

Setting name	Description	Default value	Setting range	Unit	Index number (hex)	Subindex number (hex)	Update timing	Sections
External Output0 Load Rejection Output Setting	Set the output at load OFF. 0: OFF 1: Holds the present value. During PWM output, the PWM output when the error occurred continues.	0	0/1	---	501A	01	After the Unit is restarted	*7-6-5 Load Rejection External Output Setting* on page 7-98
External Output1 Load Rejection Output Setting						02		
External Output2 Load Rejection Output Setting						03		
External Output3 Load Rejection Output Setting						04		
External Output4 Load Rejection Output Setting						05		
External Output5 Load Rejection Output Setting						06		

7

Functions

This section describes the functions of the High-speed Counter Units.

7-1 Function Block Diagram 7-3
7-1-1 Counter Mode Switching Function 7-4
7-1-2 Counter Functions 7-5
7-1-3 External Input Function 7-6
7-1-4 Comparison Function 7-7
7-1-5 External Output Function 7-11

7-2 Counter Mode Switching Function 7-12
7-2-1 Overview and Applications 7-12
7-2-2 Details on the Function 7-12
7-2-3 Setting Method 7-13

7-3 Counter Functions 7-15
7-3-1 Counter Noise Filter 7-15
7-3-2 Pulse Input Method 7-19
7-3-3 Count Direction 7-23
7-3-4 Counter Types 7-26
7-3-5 Gate control 7-28
7-3-6 Counter reset 7-30
7-3-7 Counter Preset 7-35
7-3-8 Counter Latch 7-40
7-3-9 Counter Log Function 7-44
7-3-10 Pulse Rate Measurement Function 7-49
7-3-11 Pulse Period Measurement Function 7-50
7-3-12 Time Stamping 7-54

7-4 External Input Function 7-55
7-4-1 External Input Noise Filter 7-55
7-4-2 External Input Status 7-56
7-4-3 External Input Function Selection 7-57

7-5 Comparison Function 7-59
7-5-1 Comparison Function Mode Switching 7-59
7-5-2 Target Comparison 7-61
7-5-3 2ch mode Range Comparison 7-75
7-5-4 6ch mode Range Comparison 7-86

7-6 External Output Function 7-90
7-6-1 Output Delay Function 7-90
7-6-2 PWM Output Function 7-93
7-6-3 External Output Force ON/OFF Function 7-96
7-6-4 External Output Status 7-97

7-6-5 Load Rejection External Output Setting 7-98

7-1 Function Block Diagram

The overall High-speed Counter Unit function block diagram is as shown below.

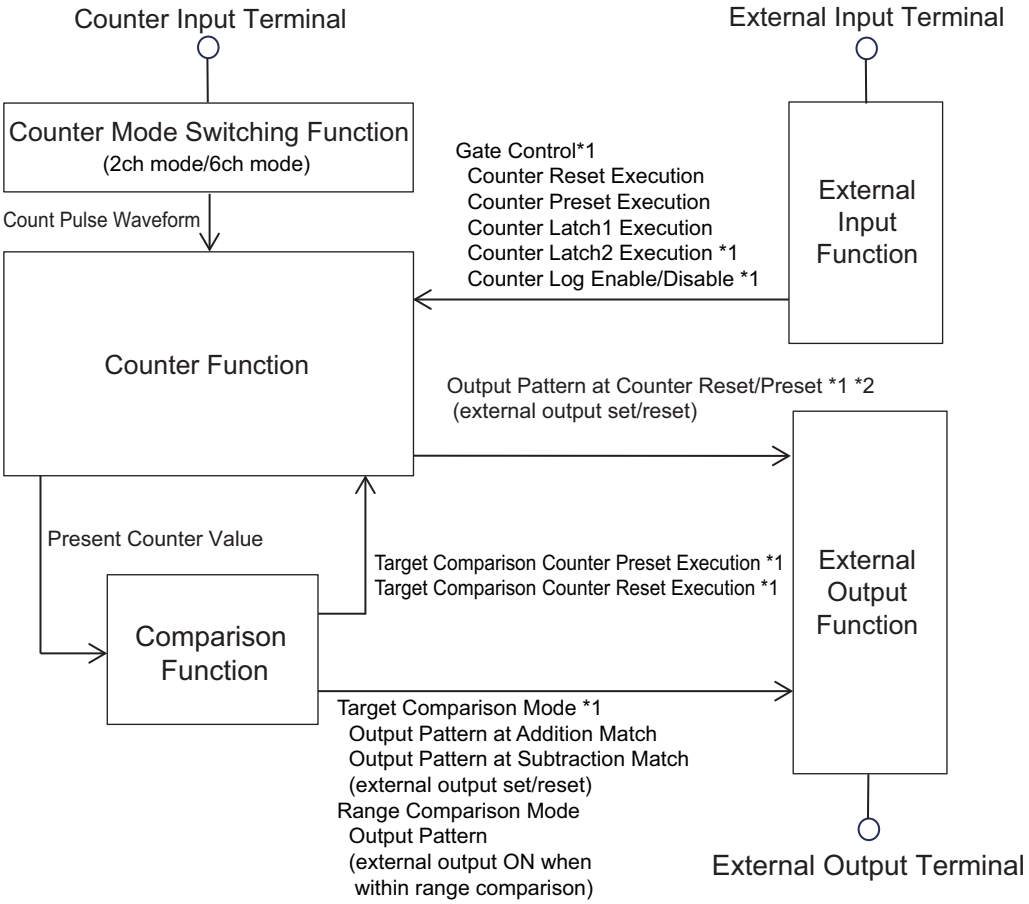

*1: Not usable in 6ch mode.

*2: Comparison Function Mode is for Target Comparison Mode only.

Below are the details of each block.

7-1-1 Counter Mode Switching Function

The following table shows the Counter Mode Switching Function block diagram.
The available functions, including the Counter Function, Comparison Function, External Input Function, and External Output Function, differ by counter mode switching.

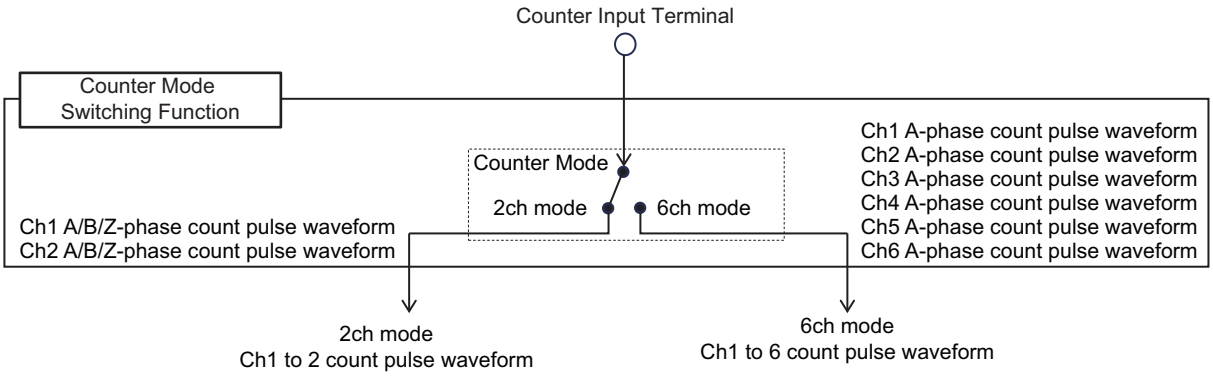

7-1-2 Counter Functions

The following table shows the counter function block diagram.

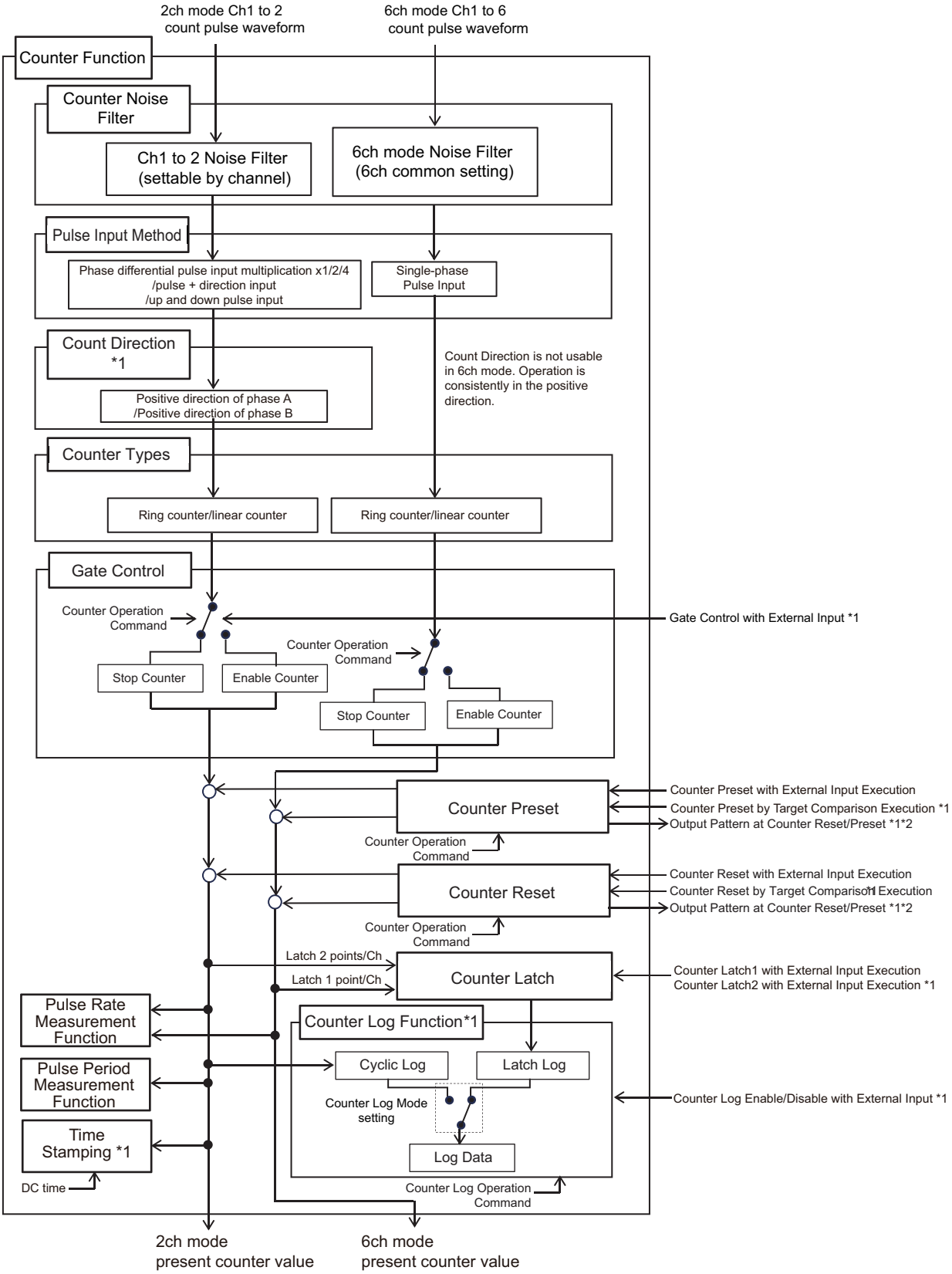

*1: Not usable in 6ch mode.

*2: Comparison Function Mode is for Target Comparison Mode only.

7-1-3 External Input Function

The following table shows the External Input Function block diagram.

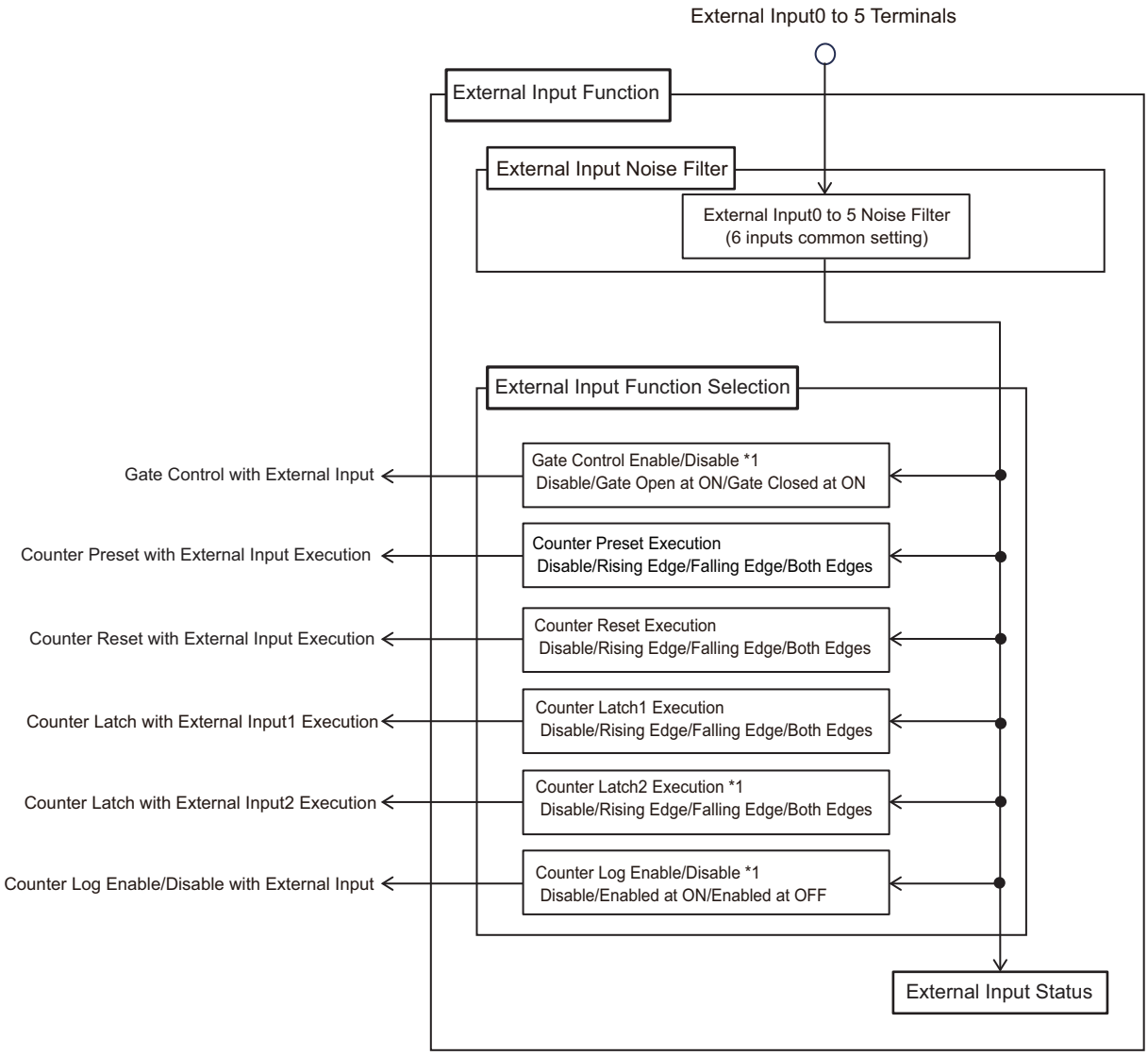

*1 Gate Control Enable/Disable, Counter Latch2 Execute, and Counter Log Enable/Disable cannot be used in 6ch mode.

7-1-4 Comparison Function

The following table shows the comparison function block diagram.
For 2ch mode, select either target comparison or range comparison.
For 6ch mode, only range comparison is available.
Depending on the selected mode, the comparison function operation differs.

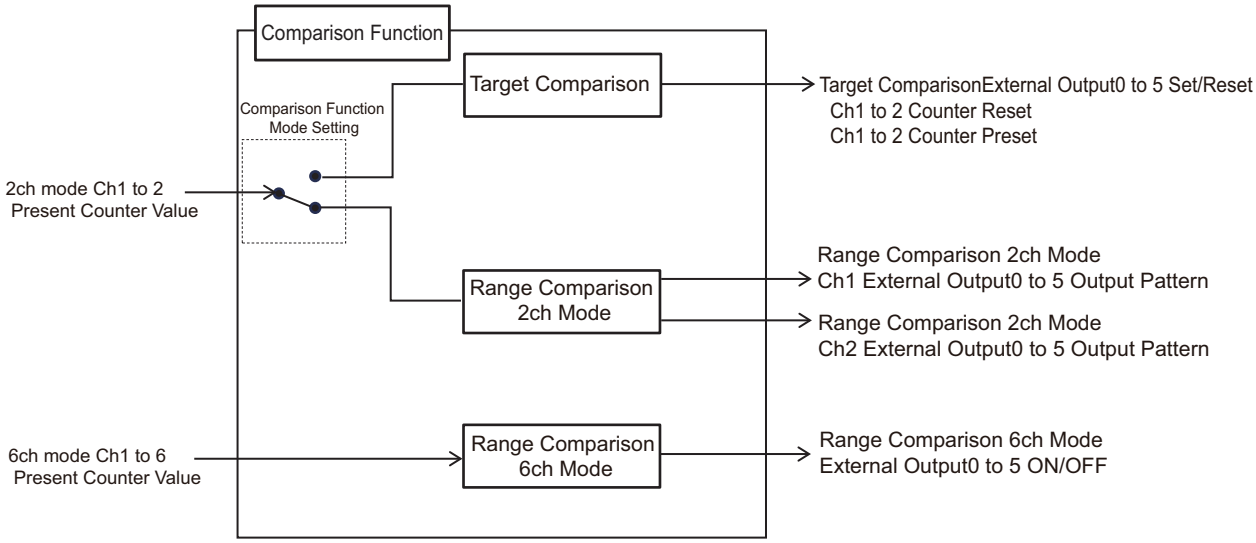

Below is a description of the details of Target Comparison, Range Comparison 2ch Mode, and Range Comparison 6ch Mode.

Target Comparison

The following table shows the Target Comparison Mode block diagram.
Target comparison can be used only in 2ch mode.
Up to 32 target comparison data items can be set for each channel. External output set/reset or counter reset/counter preset is possible for each target comparison data item at addition match and subtraction match.

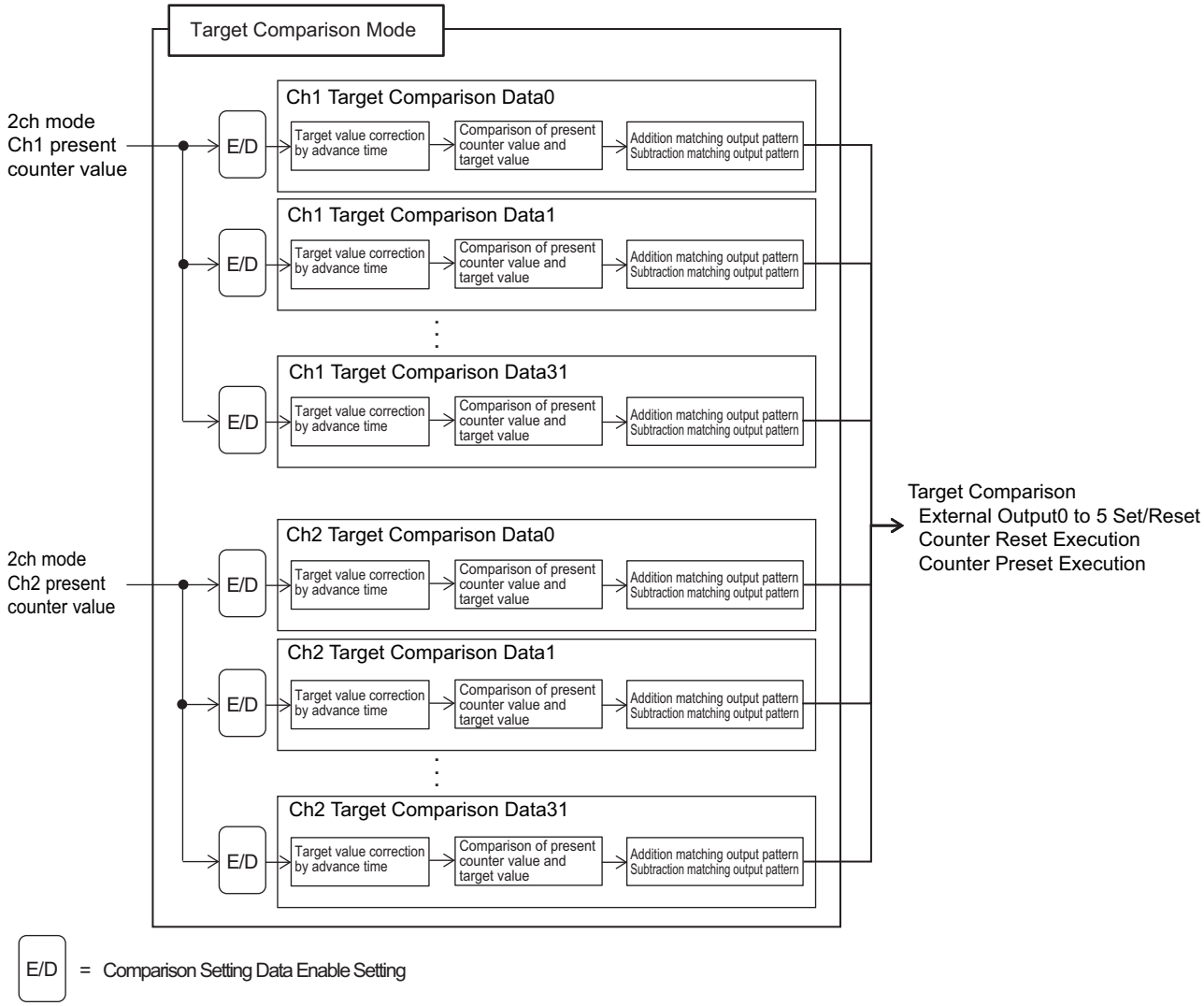

Range Comparison 2ch Mode

The following table shows the Range Comparison 2ch Mode block diagram.
Up to 32 range comparison data items can be set for each channel. The comparison results for each range comparison data can be output to arbitrary external outputs.

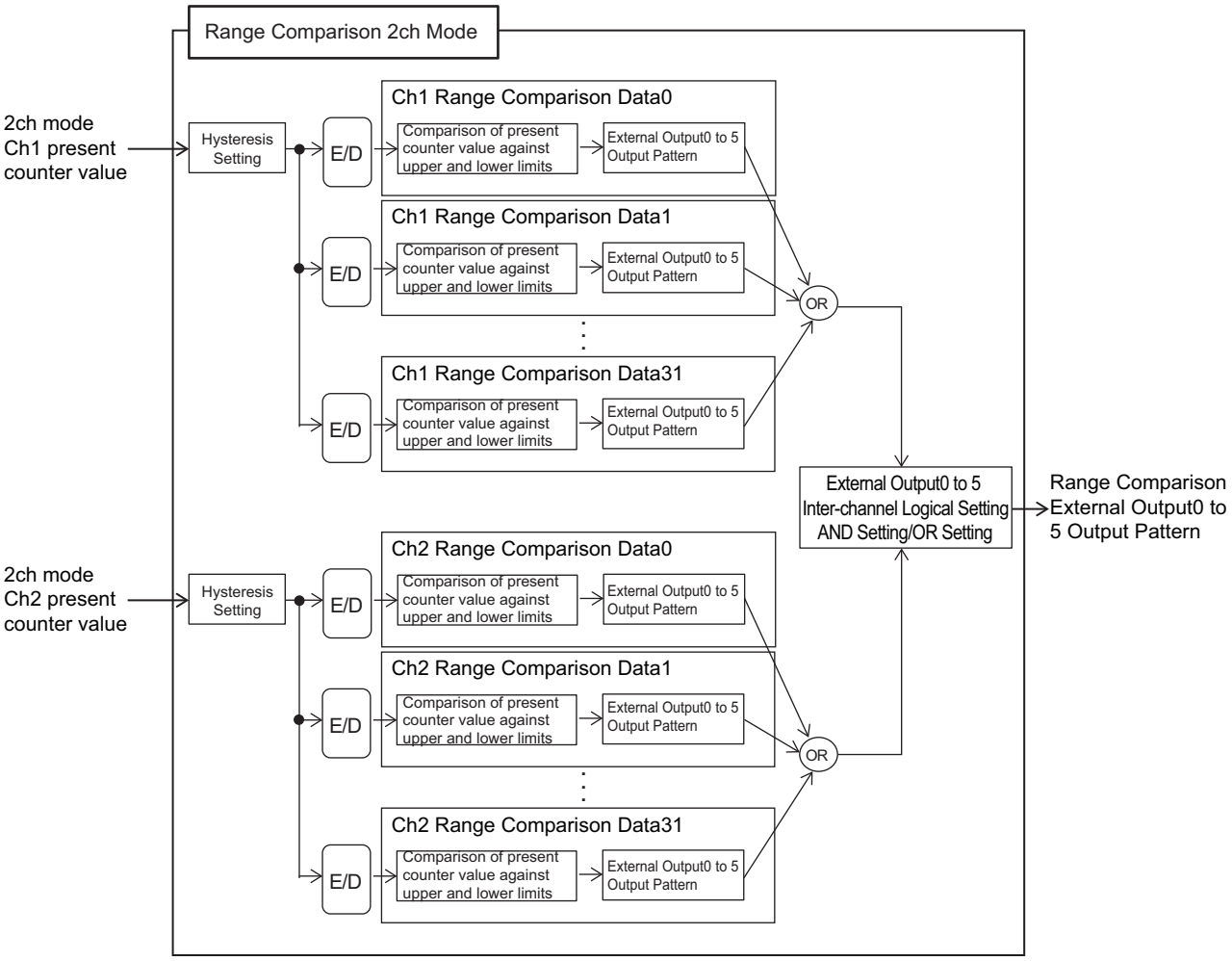

E/D = Comparison Setting Data Enable Setting

Range Comparison 6ch Mode

The following table shows the Range Comparison 6ch Mode block diagram.
In 6ch mode, the external outputs corresponding to each channel are fixed.

Ch	External output
Ch1	External Output0
Ch2	External Output1
Ch3	External Output2
Ch4	External Output3
Ch5	External Output4
Ch6	External Output5

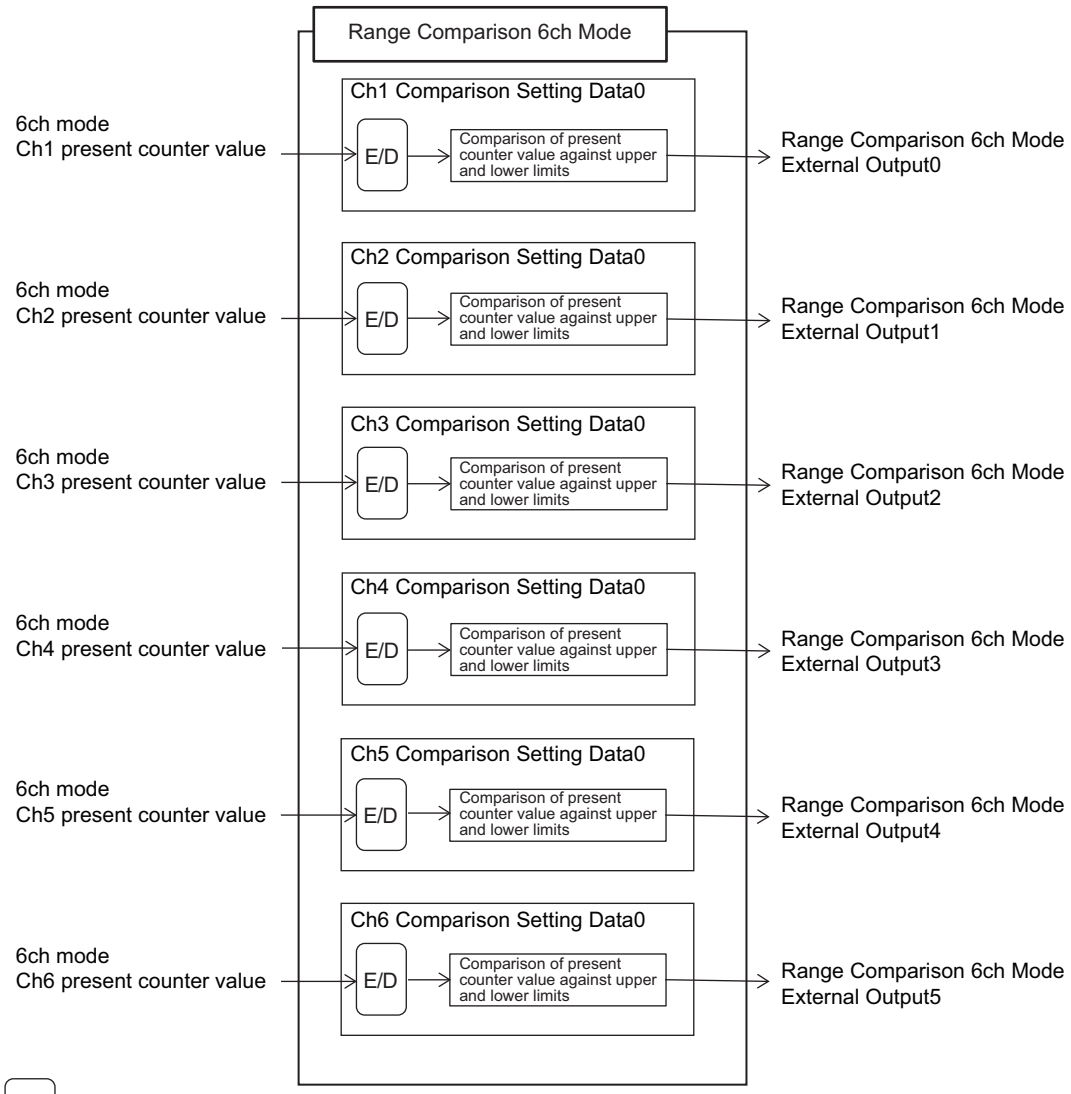

E/D = Comparison Setting Data Enable: 6ch Mode

7-1-5 External Output Function

The following table shows the External Output Function block diagram.
The External Output Function operates differently depending on comparison function selection from Target Comparison, Range Comparison 2ch Mode, and Range Comparison 6ch Mode. Target Comparison external output and Range Comparison 2ch Mode external output cannot be used in 6ch mode. Range Comparison 6ch Mode external output cannot be used in 2ch mode.
Also, when the External Output Force ON/OFF function is enabled, external output operation is possible with the force ON/OFF setting.

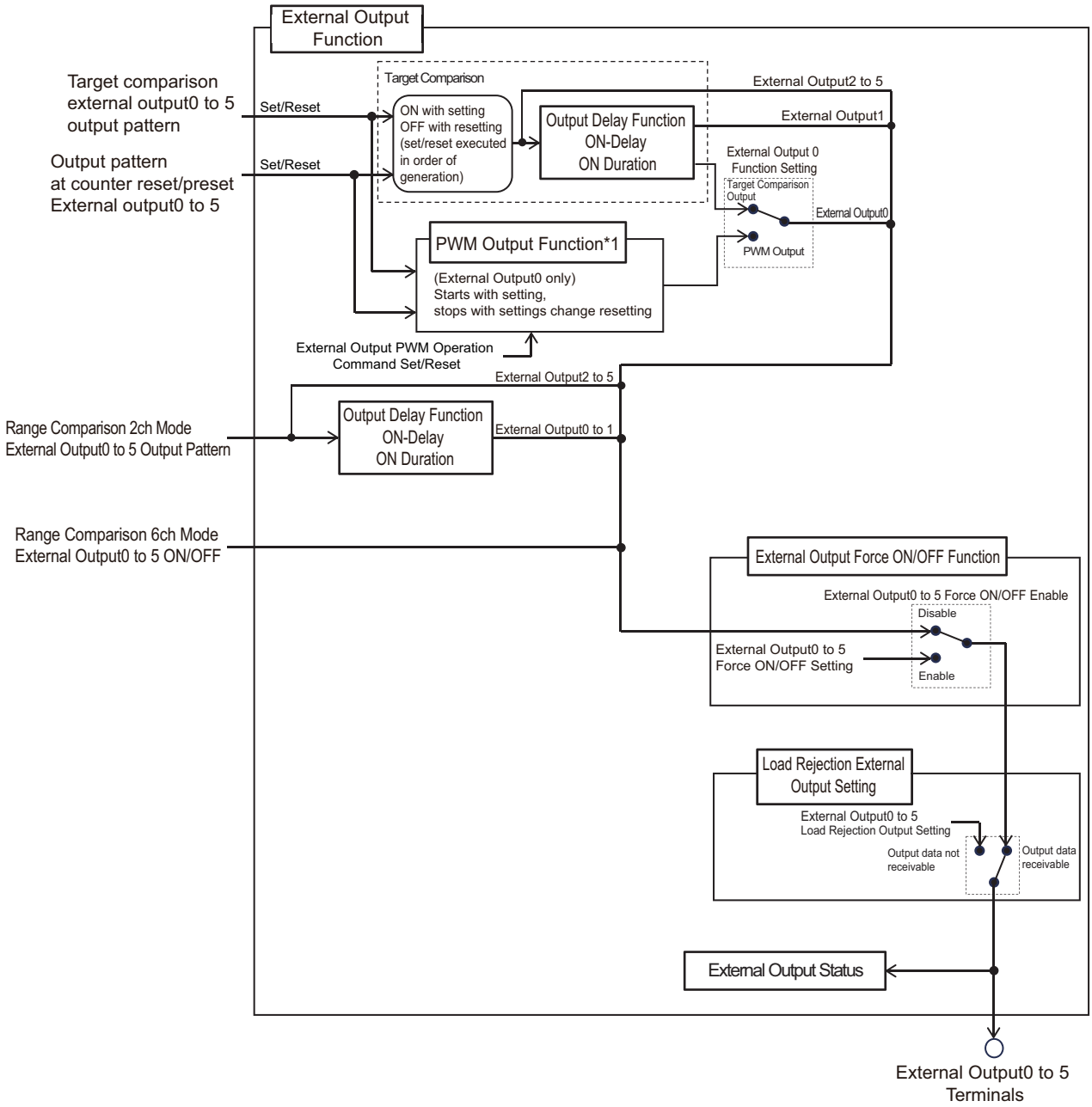

*1 The PWM Output Function can be used only with external output0. The PWM Output Function cannot be used with external output1 to 5.

7-2 Counter Mode Switching Function

This section describes the Counter Mode Switching Function.

7-2-1 Overview and Applications

For the High-speed Counter Unit, the counter mode can be selected from 2ch mode and 6ch mode in accordance with the application in use. 2ch mode offers two counter point number channels and supports various functions. 6ch mode offers six counter point number channels and supports limited functions.

7-2-2 Details on the Function

Select the Counter Mode from 2ch mode and 6ch mode.

Setting

The settings are shown in the following table.

Setting name	Description	Default value	Setting range	Unit	Update timing
Counter Mode	Set this object to the Counter Mode. 0: 2ch mode. 1: 6ch mode.	0	0/1	---	After the Unit is restarted

Differences Between 2ch Mode and 6ch Mode

Below are the differences between 2ch mode and 6ch mode.

Function	2ch mode	6ch mode
Counter functions		
Counter input terminal	A-phase, B-phase, Z-phase	A-phase only
Maximum response frequency	NX-CT2120/CT2220: 1 MHz NX-CT2320/CT2420: 4 MHz (at phase differential pulse x4)	100 kHz (for single-phase)
Counter Noise Filter	Yes (individual setting possible)	Yes (6ch common)
Pulse Input Method	Phase differential pulse (multiplication x1/2/4), pulse + direction, or up and down pulses	Single-phase only
Count Direction	Yes	No (addition only)
Counter Type	Select ring counter or linear counter	
Gate control	Counter operation command and external input can be used	Counter operation command only
Counter reset	Counter operation command, external input, Z-phase input, and target comparison can be used	Counter operation command and external input can be used

Function	2ch mode	6ch mode
Counter preset	Counter operation command, external input, and target comparison can be used	Counter operation command and external input can be used
Counter Latch	Latch count: 2/Ch Latch with External Input	Latch count: 1/Ch Latch with External Input
Counter Log Function	Yes	None
Pulse Rate Measurement Function	Yes	
Pulse Period Measurement Function	Yes	None
Time stamping	Yes	None
External Input Function		
External Input Noise Filter	Yes	
External Input Status	Yes	
External Input Function Selection	Gate Control, Counter Reset, Counter Preset, Counter Latch, and Counter Log Enable/Disable functions can be set. Multiple functions can be allocated to 1 external input.	Counter reset, counter preset, and counter latch can be set for each external input. Multiple functions can be allocated to 1 external input.
Comparison Function		
Comparison Function Mode Switching	Yes	None
Target comparison	Yes	None
Range comparison	Range Comparison 2ch Mode Range comparison data: 32/Ch Hysteresis setting: Yes External Output Inter-Channel Logical Setting: Yes	Range Comparison 6ch Mode Range comparison data: 1/Ch Hysteresis setting: No External Output Inter-Channel Logical Setting: No
External Output Function		
Output Delay Function	Yes	None
PWM Output Function	Yes	None
External Output Force ON/OFF Function	Yes	
External Output Status	Yes	
Load Rejection External Output Setting	Yes	

7-2-3 Setting Method

This section gives the setting method for Sysmac Studio.
Even if using support software other than Sysmac Studio, set the parameters given in the procedure in the Edit Unit Operation Settings Tab Page and transfer them to the NX Units.
Refer to the operation manual for support software for how to display the Edit Unit Operation Settings Tab Page and how to transfer settings to the NX Unit with support software other than Sysmac Studio.

1 Display the Edit Unit Operation Settings Tab Page.
Refer to *A-8 Displaying the Edit Unit Operation Settings Tab Page* on page A-90 for the display methods.

2 Select either **2ch Mode** or **6ch Mode** from the **Counter Mode Setting** list.
Refer to *A-9 Edit Unit Operation Settings Tab Page* on page A-93 for how to edit unit operation settings.

3 Click the **Transfer to Unit** Button.
The settings are transferred from the Sysmac Studio to the NX Unit.
The settings are reflected after the Unit is restarted.

Precautions for Safe Use

If you transfer parameters for Unit operation settings that are updated when the Unit is restarted after the settings are changed on the Sysmac Studio, the Unit will be restarted after the transfer is completed. Always sufficiently check the safety at the connected devices before you transfer the Unit operation settings.

7-3 Counter Functions

This section describes the Counter Function.

7-3-1 Counter Noise Filter

This section describes the counter noise filter.

Overview and Applications

This function eliminates the noise contained in counter input signal wires.
The use of the counter noise filter eliminates electrical noise contained in counter input signals and prevents miscounting.

Keeping the regulated interval between counter noise filter settings, when the signal input into counter input A-phase/B-phase/Z-phase is read 3 times and all are ON (or OFF), the input signal will be turned ON (or OFF).

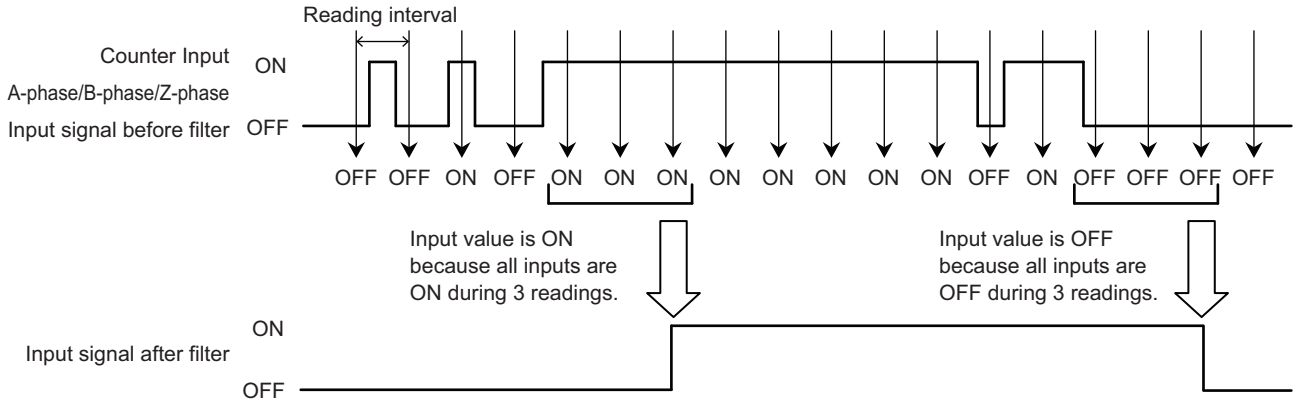

2ch Mode

NX-CT2120/CT2220

Filter Settings	Interval
250 kHz	0.08 μs
200 kHz	0.12 μs
100 kHz	0.2 μs
50 kHz	0.52 μs
20 kHz	1.44 μs
10 kHz	2.88 μs
5 kHz	5.92 μs
2 kHz	14.8 μs
1 kHz	29.6 μs
500 Hz	50 μs
200 Hz	150 μs
100 Hz	300 μs

NX-CT2320/CT2420

Filter Settings	Interval
1 MHz	0.04 μs
500 kHz	0.08 μs
200 kHz	0.12 μs
100 kHz	0.24 μs
50 kHz	0.52 μs
20 kHz	1.24 μs
10 kHz	2.52 μs
5 kHz	5 μs
2 kHz	12.6 μs
1 kHz	25.2 μs
500 Hz	50 μs
200 Hz	150 μs
100 Hz	300 μs

6ch Mode

Filter Settings	Interval
100 kHz	0.88 μs
50 kHz	1.8 μs
20 kHz	4.64 μs
10 kHz	9.28 μs
5 kHz	18.6 μs
2 kHz	50 μs
1 kHz	100 μs
500 Hz	200 μs
200 Hz	500 μs
100 Hz	950 μs

Additional Information

The counter noise filter can cause comparison function detection delay and pulse period measurement function errors. To reduce these, set the counter noise filter to a high frequency.

Details of the Counter Noise Filter Function in 2ch Mode

Counter noise filter operation differs in 2ch and 6ch modes.
This section describes the details of the Counter Noise Filter Function in 2ch mode.
The counter noise filter can be set separately for Ch1 and Ch2.
Counter noise filter setting is common for A-, B-, and Z-phases.

● Setting

The noise filter setting depends on the model.
Set the counter noise filter to the input frequency upper limit for A-phase, B-phase, and Z-phase input or above. When a frequency higher than the value set with the noise filter is input, it may not be counted correctly.

Settings for NX-CT2120/CT2220 are shown below.

Setting name	Description	Default value	Setting range	Unit	Update timing
Ch□ Counter Noise Filter*1	Sets the Counter Noise Filter. 1: 250 kHz 2: 200 kHz 3: 100 kHz 4: 50 kHz 5: 20 kHz 6: 10 kHz 7: 5 kHz 8: 2 kHz 9: 1 kHz 10: 500 Hz 11: 200 Hz 12: 100 Hz	4 (50 kHz)	1 to 12	---	After the Unit is restarted

*1. Ch□ represents the channel number. In this item, it is either Ch1 or Ch2.

Settings for NX-CT2320/CT2420 are shown below.

Setting name	Description	Default value	Setting range	Unit	Update timing
Ch□ Counter Noise Filter*1	Sets the Counter Noise Filter. 0: 1 MHz 1: 500 kHz 2: 200 kHz 3: 100 kHz 4: 50 kHz 5: 20 kHz 6: 10 kHz 7: 5 kHz 8: 2 kHz 9: 1 kHz 10: 500 Hz 11: 200 Hz 12: 100 Hz	4 (50 kHz)	0 to 12	---	After the Unit is restarted

*1. Ch□ represents the channel number. In this item, it is either Ch1 or Ch2.

Details of the Counter Noise Filter Function in 6ch Mode

Counter noise filter operation differs in 2ch and 6ch modes.
This section describes the details of the Counter Noise Filter Function in 6ch mode.

● Setting

The settings are shown in the following table.
Counter Noise Filter setting in 6ch mode is common for Ch1 to 6.
Set the Counter Noise Filter to the input frequency upper limit for A-phase input or above. When a frequency higher than the value set with the noise filter is input, it may not be counted correctly.

Setting name	Description	Default value	Setting range	Unit	Update timing
Counter Noise Filter (6ch Mode)	Sets the Counter Noise Filter. 0: 100 kHz 1: 50 kHz 2: 20 kHz 3: 10 kHz 4: 5 kHz 5: 2 kHz 6: 1 kHz 7: 500 Hz 8: 200 Hz 9: 100 Hz	1 (50 kHz)	0 to 9	---	After the Unit is restarted

Setting Method

This section gives the setting method for Sysmac Studio.
Even if using support software other than Sysmac Studio, set the parameters given in the procedure in the Edit Unit Operation Settings Tab Page and transfer them to the NX Units.
Refer to the operation manual for support software for how to display the Edit Unit Operation Settings Tab Page and how to transfer settings to the NX Unit with support software other than Sysmac Studio.

1 Display the Edit Unit Operation Settings Tab Page.
Refer to *A-8 Displaying the Edit Unit Operation Settings Tab Page* on page A-90 for the display methods.

2 Select the value to be set from the **Counter Noise Filter** list.
Refer to *A-9 Edit Unit Operation Settings Tab Page* on page A-93 for how to edit unit operation settings.

3 Click the **Transfer to Unit** Button.
The settings are transferred from the Sysmac Studio to the NX Unit.
The settings are reflected after the Unit is restarted.

7-3-2 Pulse Input Method

This section describes the pulse input method.

Overview and Applications

Select the High-speed Counter Unit pulse input method in accordance with the pulse output of connected devices such as encoders.

Details on the Function

There are the following three pulse input methods for counters in 2ch mode:

- Phase Differential Input (Multiplication x1/2/4)
- Pulse + Direction
- Up and Down Pulses

For 6ch mode, the input terminal is A-phase single-phase input only. Therefore, in 6ch mode, setting the pulse input method is not required.

● Setting

The settings for 2ch mode are shown in the following table.
In 6ch mode, the following settings are disabled, as only single-phase is available.

Setting name	Description	Default value	Setting range	Unit	Update timing
Ch□ Pulse Input Method*1	Sets the Ch□ Pulse Input Method. 0: Phase differential pulse x1. 1: Phase differential pulse x2. 2: Phase differential pulse x4. 3: Pulse + direction. 4: Up and down pulses.	2 (phase differential pulse x4)	0 to 4	---	After the Unit is restarted

*1. Ch□ represents the channel number. In this item, it is either Ch1 or Ch2.

● Phase Differential Pulse

There are three multiplications for the phase differential pulse inputs: x1, x2, and x4. The default setting is for x4 multiplication.
Connect the phase-A and phase-B 2 phase differential pulse input to inputs A and B for each channel. Connect the reset input to input Z.
Change the **Count Direction** to change the count direction. Refer to *7-3-3 Count Direction* on page 7-23 for information on changing the count direction.

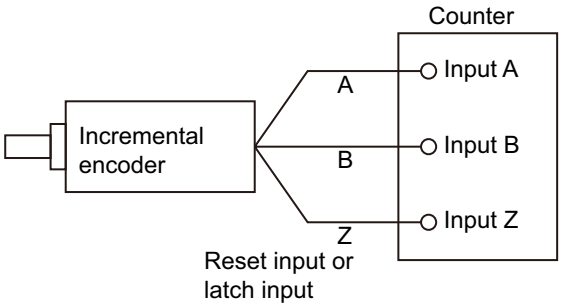

When **Count Direction = 0 (positive direction of phase A)**, operation is as follows.

- **x1**
  For count up, the pulse is counted with the A-phase rising edge. For count down, the pulse is also counted with the A-phase rising edge.
- **x2**
  When increasing the encoder input resolution, set the counter to multiplication x2. For count up, the pulse is counted with the A-phase rising and falling edges. Also, for count down, the pulse is likewise counted with the A-phase rising and falling edges.
- **x4**
  Further, when increasing the encoder input resolution, set the counter to multiplication x4. For count up, the pulse is counted with the A-phase and B-phase rising and falling edges. Also, for count down, the pulse is likewise counted with the A-phase and B-phase rising and falling edges.

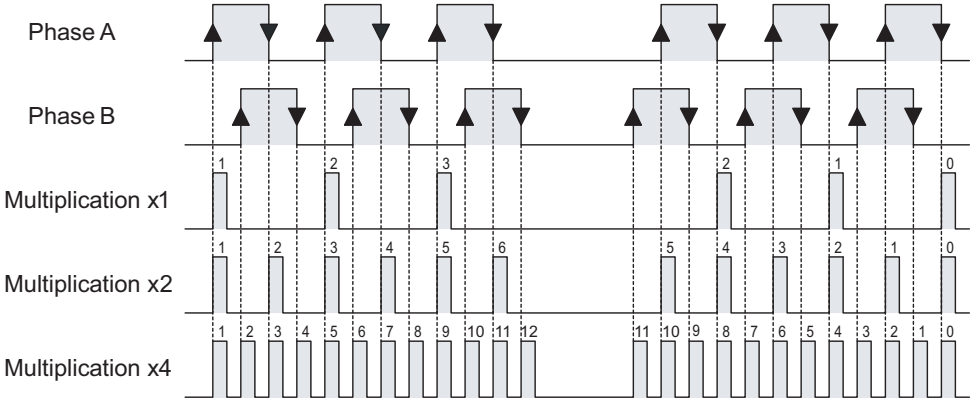

● Pulse + Direction

Input A is the count pulse input and input B is the count direction control input.
When **Count Direction = 0 (positive direction of phase A)**, the count is incremented on the rising edge of the phase A when input B is ON and decremented on the rising edge of the phase A when input B is OFF.

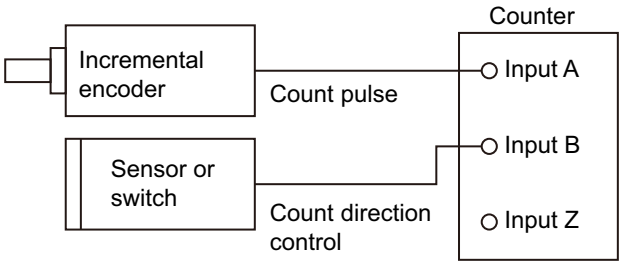

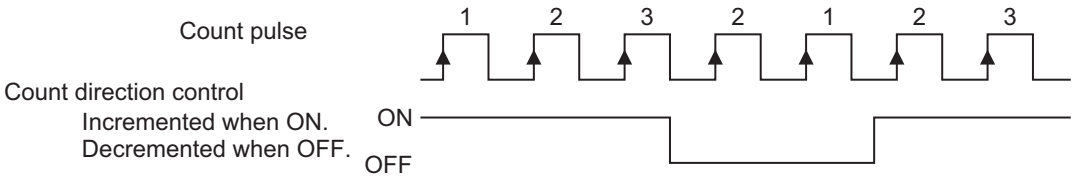

Change the **Count Direction** parameter in the Unit operation settings to change the count direction.

Refer to *7-3-3 Count Direction* on page 7-23 for information on changing the count direction.

● Up and Down Pulses

For **Count Direction = 0 (positive direction of phase A)**, the count is incremented on the rising edge of the input A pulse and decremented on the rising edge of the input B pulse.

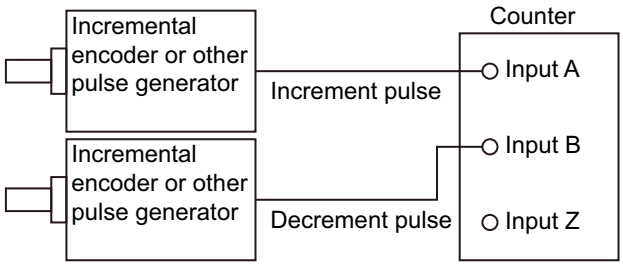

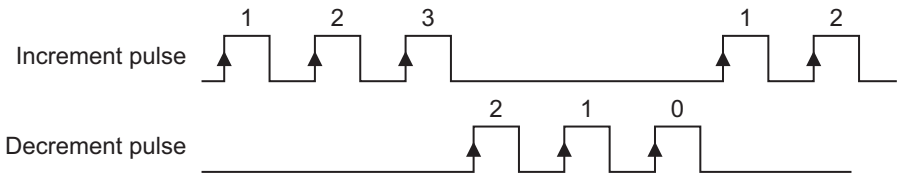

Change the **Count Direction** parameter in the Unit operation settings to change the count direction.

Refer to *7-3-3 Count Direction* on page 7-23 for information on changing the count direction.

● Single-phase Pulse Input

This is a pulse count method used in 6ch mode.

Addition takes place on the input pulse rising edge.

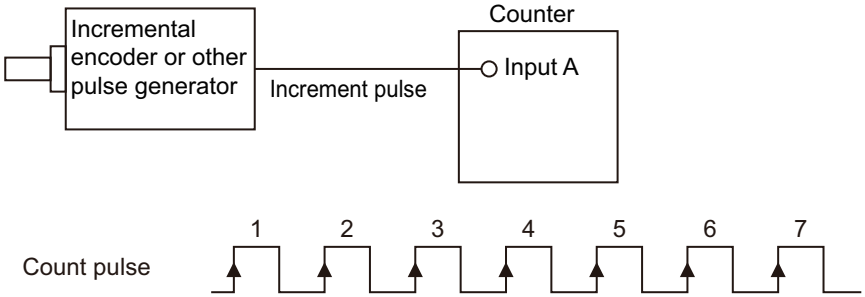

Setting Method

This section gives the setting method for Sysmac Studio.
Even if using support software other than Sysmac Studio, set the parameters given in the procedure in the Edit Unit Operation Settings Tab Page and transfer them to the NX Units.
Refer to the operation manual for support software for how to display the Edit Unit Operation Settings Tab Page and how to transfer settings to the NX Unit with support software other than Sysmac Studio.

1 Display the Edit Unit Operation Settings Tab Page.
Refer to *A-8 Displaying the Edit Unit Operation Settings Tab Page* on page A-90 for the display methods.

2 Select the input method to be set from the **Ch☐ Pulse Input Method** list.
Refer to *A-9 Edit Unit Operation Settings Tab Page* on page A-93 for how to edit unit operation settings.

3 Click the **Transfer to Unit** Button.
The settings are transferred from the Sysmac Studio to the NX Unit.
The settings are reflected after the Unit is restarted.

7-3-3 Count Direction

This section describes the count direction.

Overview and Applications

Using this setting makes it possible to switch the addition/subtraction count direction without the need for changing the wiring. Note that whether the counter operates in the positive or negative direction depends on the pulse input method. Refer to *7-3-2 Pulse Input Method* on page 7-19 for information on the counter operation for each input method.

Details on the Function

In 2ch mode, the counter direction can be set for each counter. In 6ch mode, only addition is possible and the count direction cannot be changed.

● Setting

The settings for 2ch mode are shown in the following table.
In 6ch mode, the following settings are disabled.

Setting name	Description	Default value	Setting range	Unit	Update timing
Ch□ Count Direction*1	Sets Ch□ Count Direction. 0: Positive direction of phase A. 1: Positive direction of phase B.	0	0/1	---	After the Unit is restarted

*1. Ch□ represents the channel number. In this item, it is either Ch1 or Ch2.

Counter Operation

The following table shows the counter operation according to the pulse input method and count direction.

Encoder direction setting	Input type	Counter Operation
Positive direction of phase A	Phase Differential Input (Multiplication x1/2/4)	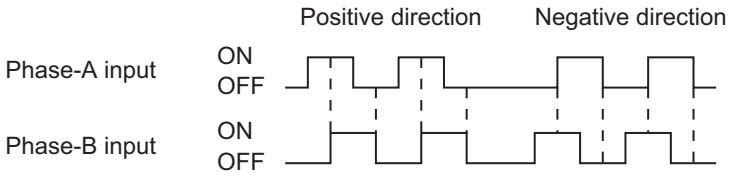
	Pulse + Direction	The counter operates in the positive direction when the direction input (phase-B input) is ON and in the negative direction when it is OFF. 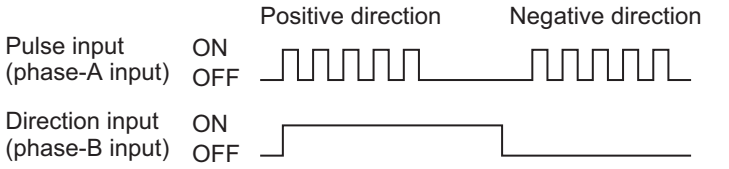
	Up and Down Pulses	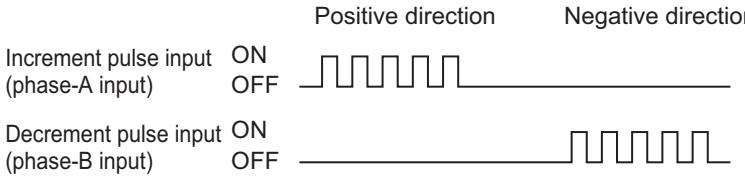
Positive direction of phase B	Phase Differential Input (Multiplication x1/2/4)	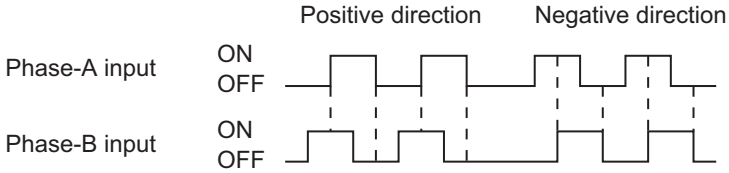
	Pulse + Direction	The counter operates in the positive direction when the direction input (phase-B input) is OFF and in the negative direction when it is ON. 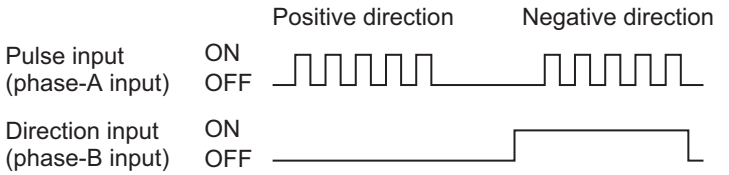
	Up and Down Pulses	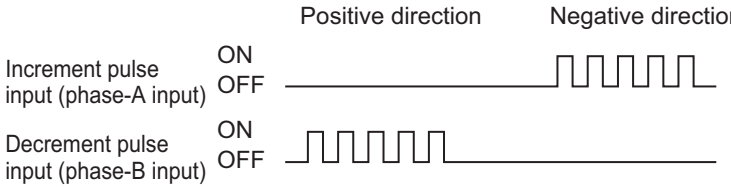

Setting Method

This section gives the setting method for Sysmac Studio.
Even if using support software other than Sysmac Studio, set the parameters given in the procedure in the Edit Unit Operation Settings Tab Page and transfer them to the NX Units.
Refer to the operation manual for support software for how to display the Edit Unit Operation Settings Tab Page and how to transfer settings to the NX Unit with support software other than Sysmac Studio.

1 Display the Edit Unit Operation Settings Tab Page.
Refer to *A-8 Displaying the Edit Unit Operation Settings Tab Page* on page A-90 for the display methods.

2 Select the item to be set from the **Ch□ Count Direction** list.
Refer to *A-9 Edit Unit Operation Settings Tab Page* on page A-93 for how to edit unit operation settings.

3 Click the **Transfer to Unit** Button.
The settings are transferred from the Sysmac Studio to the NX Unit.
The settings are reflected after the Unit is restarted.

7-3-4 Counter Types

This section describes the counter types.

Overview and Applications

You can use a counter as a ring counter or linear counter.

Details on the Function

In both 2ch and 6ch mode, linear counter or ring counter operation can be selected by setting.
Both linear counter and ring counter add and subtract within the range of the set minimum counter value to maximum counter value.

● Setting

Set the Counter Type, Minimum Counter Value, and Maximum Counter Value for each channel.

Setting name	Description	Default value	Setting range	Unit	Update timing
Ch□ Counter Type*1	Set Ch□ count type. 0: Ring counter. 1: Linear counter.	0	0/1	---	After the Unit is restarted
Ch□ Maximum Counter Value*1	Set to the maximum value of the Ch□ counter.	2147483647	1 to 2147483647	Pulses	
Ch□ Minimum Counter Value*1	Set to the minimum value of the Ch□ counter.	-2147483648	-2147483648 to 0	Pulses	

*1. Ch□ represents the channel number. Ch1 to 2 in 2ch mode and any of Ch1 to 6 in 6ch mode.

● Ring Counter

This counter counts up and down between a maximum counter value and a minimum counter value.
If the counter value exceeds the maximum counter value, the counter value returns to the minimum counter value to continue the counting operation. If the counter value exceeds the minimum counter value, the counter value returns to the maximum counter value to continue the counting operation.

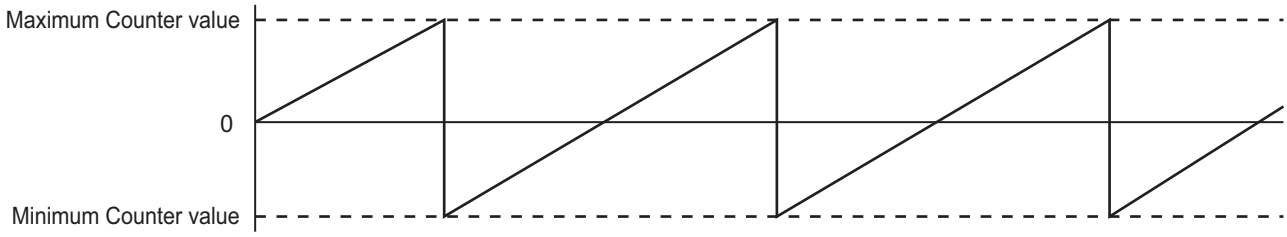

Precautions for Correct Use

- Do not set "Maximum value = 1, Minimum value = 0", it may not be counted correctly.
- When performing target comparison with the ring counter, the maximum and minimum counter value settings are restricted. Refer to *7-5-2 Target Comparison* on page 7-61 for details.

● Linear Counter

This counter counts up and down between a maximum counter value and a minimum counter value.
If the counter value exceeds the maximum counter value, the counter status Counter Overflow Flag turns ON. If the counter falls below the minimum counter value, the Counter Underflow Flag turns ON and counter operation stops.
If the counter value exceeds the maximum value or falls below the minimum value, it will stay fixed at the respective maximum and minimum values.
The Counter Overflow Flag and Counter Underflow Flag status can be cleared with Counter Preset or Counter Reset.

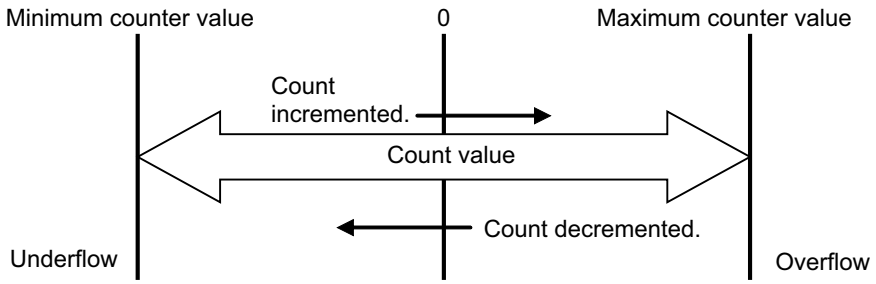

Setting Method

This section gives the setting method for Sysmac Studio.
Even if using support software other than Sysmac Studio, set the parameters given in the procedure in the Edit Unit Operation Settings Tab Page and transfer them to the NX Units.
Refer to the operation manual for support software for how to display the Edit Unit Operation Settings Tab Page and how to transfer settings to the NX Unit with support software other than Sysmac Studio.

1 Display the Edit Unit Operation Settings Tab Page.
Refer to *A-8 Displaying the Edit Unit Operation Settings Tab Page* on page A-90 for the display methods.

2 Select the item to be set from the **Ch□ Counter Type** list.
Refer to *A-9 Edit Unit Operation Settings Tab Page* on page A-93 for how to edit unit operation settings.

3 Enter set values in the **Ch□ Minimum Counter Value** and **Ch□ Maximum Counter Value** text boxes.
Refer to *A-9 Edit Unit Operation Settings Tab Page* on page A-93 for how to edit unit operation settings.

4 Click the **Transfer to Unit** Button.
The settings are transferred from the Sysmac Studio to the NX Unit.
The settings are reflected after the Unit is restarted.

7-3-5 Gate control

This section describes gate control.

Overview and Applications

Gate control can be specified for each channel.
Gate control is used to perform counting when the gate is open and stop counting when the gate is closed.

Details on the Function

Gate control methods include the following 2 types:

- Gate control with Ch□ Counter Operation Commands
- Gate control with External Input (2ch mode only)

When allocating gate control to external input with External Input Function selection, counting is executed when permitted by both operation command and external input. When either operation command or external input is set to count stop, counting stops.
When not allocating gate control with External Input Function selection, Counter Enable/Disable is determined by operation commands alone.

The Counter Enable/Disable status can be confirmed with Ch□ Counter Status Counter Enabled. It will be 1: Counter Operating when counter is enabled, and 0: Counter Stopped when counter is disabled.

● Gate control with Ch□ Counter Operation Commands

Gate control for each channel is possible with Ch□ Counter Operation Command Counter Enable/Disable.
Counting will stop when Counter Enable/Disable is *0* and be permitted when Counter Enable/Disable is *1*.
Refer to *Ch□ Counter Operation Commands* on page 6-23 for details.

Additional Information

When Unit instruction execution starts and restarts, Ch□ Counter Operation Command Counter Enable/Disable is *0*, so counting does not take place. When starting to count, set Counter Enable/Disable to *1* and open the gate.

● Gate Control with External Input

For 2ch mode, Counter Enable can be controlled via external input0 to 5 ON/OFF.
For 6ch mode, external input cannot be used as gate control.

Allocation of gate control to external input in 2ch mode is set with External Input Function Selection. Refer to *7-4-3 External Input Function Selection* on page 7-57 for more information on External Input Function Selection.
In 6ch mode, the following settings are disabled.

Setting name	Description	Default value	Setting range	Unit	Update timing
Ch□ External Input0 Gate control Enable/ Disable Setting*1	Sets Ch□ gate control with external input0 to 5. 0: Function not allocated.*2 1: Gate open at ON/gate closed at OFF.*3 2: Gate closed at ON/gate open at OFF.*4	0	0 to 2	---	After the Unit is restarted
Ch□ External Input1 Gate control Enable/ Disable Setting*1					
Ch□ External Input2 Gate control Enable/ Disable Setting*1					
Ch□ External Input3 Gate control Enable/ Disable Setting*1					
Ch□ External Input4 Gate control Enable/ Disable Setting*1					
Ch□ External Input5 Gate control Enable/ Disable Setting*1					

*1. Ch□ represents the channel number. Ch1 to 2 in 2ch mode and any of Ch1 to 6 in 6ch mode.
*2. Gate control is not possible with the relevant external input.
*3. Counter is enabled with the relevant external input ON and disabled when OFF.
*4. Counter is enabled with the relevant external input OFF and disabled when ON.

When the gate is open, the counter will count the pulses. When the gate is closed, the counter does not count any pulses.

1: For gate open at ON/gate closed at OFF

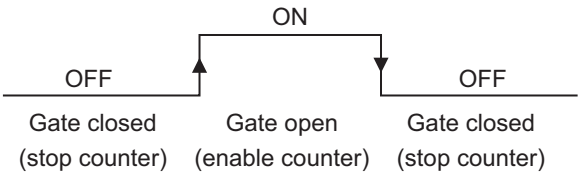

2: For gate closed at ON/gate open at OFF

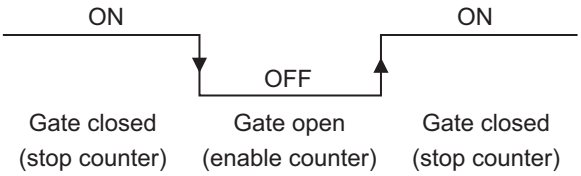

7-3-6 Counter reset

This section describes counter reset.

Overview and Applications

When counter reset is executed, the present counter value is changed to 0.
Counter reset can be executed for each counter.

Details on the Function

Counter reset methods include the following 4 types.

- Counter reset with Operation Command
- Counter reset with External Input
- Counter reset with Z-phase Input (in 2ch mode only)
- Counter reset with Target Comparison (in 2ch mode only)

Counter reset with operation commands from the CPU Unit is called Internal Counter Reset. Also, counter reset with external input, Z-phase, or target comparison is called External Counter Reset.

Additional Information

- In 2ch mode, counter reset via external input, Z-phase, and target comparison is executed immediately after input.
- In 6ch mode, for counter reset via external input, there will be a delay of up to 1 ms from input to processing completion.
- After counter reset with external input, Z-phase, or target comparison, when repeatedly executing counter reset or counter preset, because processing time is required after counter reset execution, allow an interval between executions of at least 1 ms.
- When external counter reset is disabled as well, internal counter reset with Ch□ Counter Operation Command is possible.
- At instruction execution start and restart for this Unit, external counter reset is disabled, so counter reset by external input, Z-phase, and target comparison will be disabled.

● Counter Reset by Ch□ Counter Operation Command

Change Internal Counter Reset Execution in the Ch□ Counter Operation Command parameter from 0 to 1 to reset the counter.
When internal counter reset is complete, the Ch□ Counter Status Internal Counter Reset Completed will be 1. After confirming that Internal Counter Reset Completed is 1, set the Ch□ Counter Operation Command parameter Internal Counter Reset Execution to 0.
Refer to *Ch□ Counter Operation Commands* on page 6-23, *Ch1 to 2 Counter Status* on page 6-12, and *Ch3 to 6 Counter Status* on page 6-13 for details.

● Counter Reset with External Input

In 2ch mode, counter reset can be executed with the external input0 to 5 rising and falling edges.
In 6ch mode, counter reset by rising and falling edges can be executed with Ch1 external input0, Ch2 external input1, Ch3 external input2, Ch4 external input3, Ch5 external input4, and Ch6 external input5.

- **External Input Function Selection**

  Setting counter reset with external input is done with External Input Function selection. Refer to *7-4-3 External Input Function Selection* on page 7-57 for more information on External Input Function Selection.

  In 2ch mode, counter reset can be executed via arbitrary external input. The settings are as follows:

Setting name	Description	Default value	Setting range	Unit	Update timing
Ch□ External Input0 Reset Execution Conditions Setting*1	Sets Ch□ Counter Reset Execution Setting with external input0 to 5. 0: Function not allocated.*2 1: Executed at rising edge.*3 2: Executed at falling edge.*4 3: Executed at both edges.*5	0	0 to 3	---	After the Unit is restarted
Ch□ External Input1 Reset Execution Conditions Setting*1					
Ch□ External Input2 Reset Execution Conditions Setting*1					
Ch□ External Input3 Reset Execution Conditions Setting*1					
Ch□ External Input4 Reset Execution Conditions Setting*1					
Ch□ External Input5 Reset Execution Conditions Setting*1					

*1. Ch□ represents the channel number. In this item, it is either Ch1 or Ch2.
*2. Counter reset is not executed with the relevant external input.
*3. Counter reset is executed on the rising edge of the relevant external input. Counter reset is not executed on the falling edge.
*4. Counter reset is executed on the falling edge of the relevant external input. Counter reset is not executed on the rising edge.
*5. Counter reset is executed on the rising and falling edges of the relevant external input.

In 6ch mode, counter reset can be executed via a determined external input. The settings are as follows:

Setting name	Description	Default value	Setting range	Unit	Update timing
Ch1 External Input0 Reset Execution Conditions Setting	Sets Ch□ Counter Reset Execution Setting with external input. 0: Function not allocated.*1 1: Executed at rising edge.*2 2: Executed at falling edge.*3 3: Executed at both edges.*4	0	0 to 3	---	After the Unit is restarted
Ch2 External Input1 Reset Execution Conditions Setting					
Ch3 External Input2 Reset Execution Conditions Setting					
Ch4 External Input3 Reset Execution Conditions Setting					
Ch5 External Input4 Reset Execution Conditions Setting					
Ch6 External Input5 Reset Execution Conditions Setting					

*1. Counter reset is not executed with the relevant external input.
*2. Counter reset is executed on the rising edge of the relevant external input. Counter reset is not executed on the falling edge.
*3. Counter reset is executed on the falling edge of the relevant external input. Counter reset is not executed on the rising edge.
*4. Counter reset is executed on the rising and falling edges of the relevant external input.

- **Counter Reset Enable/Disable**
  To execute counter reset by external input, the Ch□ Counter Operation Command External Counter Reset Enable bit must be set to 1. With the External Counter Reset Enable bit set to 0, counter reset by external input will not be executed.
  The external counter reset enable/disable status can be confirmed with the Ch□ Counter Status External Input Counter Reset Enabled Flag. When the External Input Counter Reset Enabled Flag is 1, external counter reset is enabled; when it is 0, external counter reset is disabled.

- **Counter Reset Mode**
  Operation when reset is generated by external input, Z-phase, and target comparison after External Counter Reset Enable is determined by Counter Operation Command External Counter Reset Mode.
  When External Counter Reset Mode is 0, counter reset by external input, Z-phase, and target comparison will be executed each time.
  When External Counter Reset Mode is 1, counter reset will be executed only once after enabling. After that, if counter reset is disabled and then enabled again by Counter Operation Command

External Counter Reset Enable, it can be executed by external input, Z-phase, and target comparison.

- **Counter Reset Completed Flag**
  When counter reset by external input occurs, the Counter Status External Input Counter Reset Completed Flag will be 1. The External Input Counter Reset Completed Flag can be cleared by changing the Ch□ Counter Operation Command External Input Counter Reset Completed Flag Clear from 0 to 1.
  If the next external input reset occurs before clearing the External Input Counter Reset Completed Flag, with External Counter Reset Mode as 0, once again conduct counter reset by external input. The External Input Counter Reset Completed Flag will remain at 1.

● Counter Reset with Z-phase Input

In 2ch mode, the counter can be reset to 0 on the rising edge of Z-phase input.
In 6ch mode, because there is no Z-phase input terminal, counter reset with Z-phase input is not possible.

- **Counter Reset Enable/Disable**
  To execute counter reset by Z-phase input, Ch□ Counter Operation Command External Counter Reset Enable must be set to 1. With External Counter Reset Enable set to 0, counter reset by Z-phase input will not be executed.
  The external counter reset enable/disable status can be confirmed with the Ch□ Counter Status External Input Counter Reset Enabled Flag. When the External Input Counter Reset Enabled Flag is 1, external counter reset is enabled; when it is 0, external counter reset is disabled.

- **Counter Reset Mode**
  Operation when reset is generated by external input, Z-phase, and target comparison after External Counter Reset Enable is determined by Counter Operation Command External Counter Reset Mode.
  When External Counter Reset Mode is 0, counter reset by external input, Z-phase, and target comparison will be executed each time.
  When External Counter Reset Mode is 1, counter reset will be executed only once after enabling. After that, if counter reset is disabled and then enabled again by Counter Operation Command External Counter Reset Enable, it can be executed by external input, Z-phase, and target comparison.

- **Counter Reset Completed Flag**
  When counter reset by Z-phase input occurs, the Counter Status Z-phase Input Counter Reset Completed Flag will be 1. The Z-phase Input Counter Reset Completed Flag can be cleared by changing the Ch□ Counter Operation Command Z-phase Input Counter Reset Completed Flag Clear from 0 to 1.
  If the next Z-phase input reset occurs before clearing the Z-phase Input Counter Reset Completed Flag, with External Counter Reset Mode as 0, once again conduct counter reset by Z-phase input. The Z-phase Input Counter Reset Completed Flag will remain at 1.

● Counter Reset by Target Comparison

In 2ch mode, the counter can be reset by target comparison with the comparison function. Counter reset by range comparison is not possible.

In 6ch mode, counter reset with the comparison function is not possible.
Refer to *7-5-2 Target Comparison* on page 7-61 for details.

- **Counter Reset Enable/Disable**
  To execute counter reset by target comparison, the Ch□ Counter Operation Command External Counter Reset Enable must be set to 1. With External Counter Reset Enable set to 0, counter reset by target comparison will not be executed.
  The external counter reset enable/disable status can be confirmed with the Ch□ Counter Status External Input Counter Reset Enabled Flag. When the External Input Counter Reset Enabled Flag is 1, external counter reset is enabled; when it is 0, external counter reset is disabled.

- **Counter Reset Mode**
  Operation when reset is generated by external input, Z-phase, and target comparison after External Counter Reset Enable is determined by Counter Operation Command External Counter Reset Mode.
  When External Counter Reset Mode is 0, counter reset by external input, Z-phase, and target comparison will be executed each time.
  When External Counter Reset Mode is 1, counter reset will be executed only once after enabling. After that, if counter reset is disabled and then enabled again by Counter Operation Command External Counter Reset Enable, it can be executed by external input, Z-phase, and target comparison.

- **Counter Reset Completed Flag**
  When counter reset by target comparison occurs, the Ch□ Counter Status Target Comparison Counter Reset Completed Flag will be 1. The Target Comparison Counter Reset Completed Flag can be cleared by changing the Ch□ Counter Operation Command Target Comparison Counter Reset Completed Flag Clear from 0 to 1.
  If the next target comparison reset occurs before clearing the Target Comparison Counter Reset Completed Flag, with External Counter Reset Mode as 0, once again conduct counter reset by target comparison. The Target Comparison Counter Reset Completed Flag will remain at 1.

7-3-7 Counter Preset

This section describes counter preset.

Overview and Applications

When counter preset is executed, the present counter value is changed to the preset command value. This can be used when changing the present counter value when power is turned ON or during control.
Counter preset can be executed for each counter.
The preset command value is set with Ch□ Manual Preset Command Value in the I/O data below.

Data Name	Function	Data type	Default value	I/O Port Name
Ch1 Preset Command Value	Preset command value for Ch1.	DINT	0	Ch1 Preset Command Value
Ch2 Preset Command Value	Preset command value for Ch2.	DINT	0	Ch2 Preset Command Value
Ch3 Preset Command Value*1	Preset command value for Ch3.	DINT	0	Ch3 Preset Command Value
Ch4 Preset Command Value*1	Preset command value for Ch4.	DINT	0	Ch4 Preset Command Value
Ch5 Preset Command Value*1	Preset command value for Ch5.	DINT	0	Ch5 Preset Command Value
Ch6 Preset Command Value*1	Preset command value for Ch6.	DINT	0	Ch6 Preset Command Value

*1. For 2ch mode, the Ch3 to Ch6 preset command values are not used.

When the Ch□ Preset Command Value is set to a value outside the Ch□ Minimum Counter Value to Ch□ Maximum Counter Value range, the Ch□ Counter Status Counter Preset Value Error Flag becomes 1.
To reset the Counter Preset Value Error Flag to 0, set the Ch□ Preset Command Value within the range. When the Counter Preset Value Error Flag is 1, counter preset will not be executed.

Details on the Function

Counter preset methods include the following 3 types.
- Counter preset with Operation Command
- Counter Preset with External Input
- Counter preset with Target Comparison (in 2ch mode only)

Counter preset with operation commands from the CPU Unit is called Internal Counter Preset. Also, counter preset with external input or target comparison is called External Counter Preset.

Additional Information

- In 2ch mode, counter preset via external input or target comparison is executed immediately after input.
- In 6ch mode, for counter preset via external input, there will be a delay of up to 1 ms from input to processing completion.
- After counter preset with external input or target comparison, when repeatedly executing counter reset or counter preset, because processing time is required after counter preset execution, allow an interval between executions of at least 1 ms.
- When external counter preset is disabled as well, internal counter preset with Ch□ Counter Operation Command is possible.
- At instruction execution start and restart for this Unit, external counter preset is disabled, so counter preset by external input and target comparison will be disabled.

● Counter Preset by Ch□ Counter Operation Command

Change Internal Counter Preset Execution in the Ch□ Counter Operation Command parameter from 0 to 1 to preset the counter.

When internal counter preset is complete, the Ch□ Counter Status Internal Counter Preset Completed will be 1. After confirming that Internal Counter Preset Completed is 1, set the Ch□ Counter Operation Command parameter Internal Counter Preset Execution to 0.

Refer to *Ch□ Counter Operation Commands* on page 6-23, *Ch1 to 2 Counter Status* on page 6-12, and *Ch3 to 6 Counter Status* on page 6-13 for details.

● Counter Preset with External Input

In 2ch mode, counter preset can be executed with the external input0 to 5 rising and falling edges. In 6ch mode, counter reset by rising and falling edges can be executed with Ch1 external input0, Ch2 external input1, Ch3 external input2, Ch4 external input3, Ch5 external input4, and Ch6 external input5.

- **External Input Function Selection**

  Setting counter preset with external input is done with External Input Function selection. Refer to *7-4-3 External Input Function Selection* on page 7-57 for more information on External Input Function Selection.

  In 2ch mode, counter preset can be executed via arbitrary external input. The settings are as follows:

Setting name	Description	Default value	Setting range	Unit	Update timing
Ch□ External Input0 Preset Execution Conditions Setting*1	Sets Ch□ Counter Preset Execution Setting with external input0 to 5. 0: Function not allocated.*2 1: Executed at rising edge.*3 2: Executed at falling edge.*4 3: Executed at both edges.*5	0	0 to 3	---	After the Unit is restarted
Ch□ External Input1 Preset Execution Conditions Setting*1					
Ch□ External Input2 Preset Execution Conditions Setting*1					
Ch□ External Input3 Preset Execution Conditions Setting*1					
Ch□ External Input4 Preset Execution Conditions Setting*1					
Ch□ External Input5 Preset Execution Conditions Setting*1					

*1. Ch□ represents the channel number. In this item, it is either Ch1 or Ch2.
*2. Counter preset is not executed with the relevant external input.
*3. Counter preset is executed on the rising edge of the relevant external input. Counter preset is not executed on the falling edge.
*4. Counter preset is executed on the falling edge of the relevant external input. Counter preset is not executed on the rising edge.
*5. Counter preset is executed on the rising and falling edges of the relevant external input.

In 6ch mode, counter preset can be executed via a determined external input. The settings are as follows:

Setting name	Description	Default value	Setting range	Unit	Update timing
Ch1 External Input0 Preset Execution Conditions Setting	Sets Ch□ Counter Preset Execution Setting with external input. 0: Function not allocated.*1 1: Executed at rising edge.*2 2: Executed at falling edge.*3 3: Executed at both edges.*4	0	0 to 3	---	After the Unit is restarted
Ch2 External Input1 Preset Execution Conditions Setting					
Ch3 External Input2 Preset Execution Conditions Setting					
Ch4 External Input3 Preset Execution Conditions Setting					
Ch5 External Input4 Preset Execution Conditions Setting					
Ch6 External Input5 Preset Execution Conditions Setting					

*1. Counter preset is not executed with the relevant external input.
*2. Counter preset is executed on the rising edge of the relevant external input. Counter preset is not executed on the falling edge.
*3. Counter preset is executed on the falling edge of the relevant external input. Counter preset is not executed on the rising edge.
*4. Counter preset is executed on the rising and falling edges of the relevant external input.

- **Counter Preset Enable/Disable**
  To execute counter preset by external input, the Ch□ Counter Operation Command External Counter Preset Enable bit must be set to 1. With the External Counter Preset Enable bit set to 0, counter preset by external input will not be executed.
  The external counter preset enable/disable status can be confirmed with the Ch□ Counter Status External Input Counter Preset Enabled Flag. When the External Input Counter Preset Enabled Flag is 1, external counter preset is enabled; when it is 0, external counter preset is disabled.

- **Counter Preset Completed Flag**
  When counter preset by external input occurs, the Counter Status External Input Counter Preset Completed Flag will be 1. The External Input Counter Preset Completed Flag can be cleared by changing the Ch□ Counter Operation Command External Input Counter Preset Completed Flag Clear from 0 to 1.

If the next external input preset occurs before clearing the External Input Counter Preset Completed Flag, once again conduct counter preset by external input. The External Input Counter Preset Completed Flag will remain at 1.

● Counter Preset by Target Comparison

In 2ch mode, the counter can be preset by target comparison with the comparison function. Counter preset by range comparison is not possible.
In 6ch mode, counter preset with the comparison function is not possible.
Refer to *7-5-2 Target Comparison* on page 7-61 for details.

- **Counter Preset Enable/Disable**
  To execute counter preset by target comparison, the Ch□ Counter Operation Command External Counter Preset Enable must be set to 1. With External Counter Preset Enable set to 0, counter preset by target comparison will not be executed.
  The external counter preset enable/disable status can be confirmed with the Ch□ Counter Status External Input Counter Preset Enabled Flag. When the External Input Counter Preset Enabled Flag is 1, external counter preset is enabled; when it is 0, external counter preset is disabled.

- **Counter Preset Completed Flag**
  When counter preset by target comparison occurs, the Ch□ Counter Status Target Comparison Counter Preset Completed Flag will be 1. The Target Comparison Counter Preset Completed Flag can be cleared by changing the Ch□ Counter Operation Command Target Comparison Counter Preset Completed Flag Clear from 0 to 1.
  If the next target comparison preset occurs before clearing the Target Comparison Counter Preset Completed Flag, once again conduct counter preset by target comparison. The Target Comparison Counter Preset Completed Flag will remain at 1.

7-3-8 Counter Latch

This section describes counter latch.

Overview and Applications

For each channel, present counter values can be saved in counter latch data.
In 2ch mode, 2 counter latch data items (counter latch1 and counter latch2) can be saved for each channel.
In 6ch mode, counter latch1 data can be saved for each channel.
The saved latch data can be read with Ch□ Latch1 Count Data and Ch□ Latch2 Count Data in the I/O data below.

Data Name	Function	Data type	Default value	I/O Port Name
Ch1 Latch1 Count Data	Count data when Ch1 latch1 is complete.	DINT	0	Ch1 Latch1 Count Data
Ch2 Latch1 Count Data	Count data when Ch2 latch1 is complete.	DINT	0	Ch2 Latch1 Count Data
Ch3 Latch1 Count Data*1	Count data when Ch3 latch1 is complete.	DINT	0	Ch3 Latch1 Count Data
Ch4 Latch1 Count Data*1	Count data when Ch4 latch1 is complete.	DINT	0	Ch4 Latch1 Count Data
Ch5 Latch1 Count Data*1	Count data when Ch5 latch1 is complete.	DINT	0	Ch5 Latch1 Count Data
Ch6 Latch1 Count Data*1	Count data when Ch6 latch1 is complete.	DINT	0	Ch6 Latch1 Count Data
Ch1 Latch2 Count Data*2	Count data when Ch1 latch2 is complete.	DINT	0	Ch1 Latch2 Count Data
Ch2 Latch2 Count Data*2	Count data when Ch2 latch2 is complete.	DINT	0	Ch2 Latch2 Count Data

*1. For 2ch mode, there is no Ch3 to Ch6 Latch1 Count Data.
*2. For 6ch mode, there is no Ch1 to Ch2 Latch1 Count Data.

Details on the Function

The only counter latch method is the one below.

- Counter Latch with External Input

In 2ch mode, counter latch can be executed with the external input0 to 5 rising and falling edges.
In 6ch mode, counter latch by rising and falling edges can be executed with Ch1 external input0, Ch2 external input1, Ch3 external input2, Ch4 external input3, Ch5 external input4, and Ch6 external input5.

● External Input Function Selection

Setting counter latch with external input is done with External Input Function selection. Refer to *7-4-3 External Input Function Selection* on page 7-57 for more information on External Input Function Selection.

In 2ch mode, counter latch1 and counter latch2 are executed via arbitrary external input. The settings are as follows:

Setting name	Description	Default value	Setting range	Unit	Update timing
Ch□ External Input0 Latch1 Execution Conditions Setting*1	Sets Ch□ Counter Latch1 to 2 Execution Setting with external input0 to 5. 0: Function not allocated.*2 1: Executed at rising edge.*3 2: Executed at falling edge.*4 3: Executed at both edges.*5	0	0 to 3	---	After the Unit is restarted
Ch□ External Input0 Latch2 Execution Conditions Setting*1					
Ch□ External Input1 Latch1 Execution Conditions Setting*1					
Ch□ External Input1 Latch2 Execution Conditions Setting*1					
Ch□ External Input2 Latch1 Execution Conditions Setting*1					
Ch□ External Input2 Latch2 Execution Conditions Setting*1					
Ch□ External Input3 Latch1 Execution Conditions Setting*1					
Ch□ External Input3 Latch2 Execution Conditions Setting*1					
Ch□ External Input4 Latch1 Execution Conditions Setting*1					
Ch□ External Input4 Latch2 Execution Conditions Setting*1					
Ch□ External Input5 Latch1 Execution Conditions Setting*1					
Ch□ External Input5 Latch2 Execution Conditions Setting*1					

*1. Ch□ represents the channel number. In this item, it is either Ch1 or Ch2.

*2. Counter latch is not executed with the relevant external input.

*3. Counter latch is executed on the rising edge of the relevant external input. Counter latch is not executed on the falling edge.
*4. Counter latch is executed on the falling edge of the relevant external input. Counter latch is not executed on the rising edge.
*5. Counter latch is executed on the rising and falling edges of the relevant external input.

In 6ch mode, counter latch can be executed via a determined external input. The settings are as follows:

Setting name	Description	Default value	Setting range	Unit	Update timing
Ch1 External Input0 Latch1 Execution Conditions Setting	Sets Ch□ Counter Latch Execution Setting with external input. 0: Function not allocated.*1 1: Executed at rising edge.*2 2: Executed at falling edge.*3 3: Executed at both edges.*4	0	0 to 3	---	After the Unit is restarted
Ch2 External Input1 Latch1 Execution Conditions Setting					
Ch3 External Input2 Latch1 Execution Conditions Setting					
Ch4 External Input3 Latch1 Execution Conditions Setting					
Ch5 External Input4 Latch1 Execution Conditions Setting					
Ch6 External Input5 Latch1 Execution Conditions Setting					

*1. Counter preset is not executed with the relevant external input.
*2. Counter latch is executed on the rising edge of the relevant external input. Counter latch is not executed on the falling edge.
*3. Counter latch is executed on the falling edge of the relevant external input. Counter latch is not executed on the rising edge.
*4. Counter latch is executed on the rising and falling edges of the relevant external input.

● Counter Latch Enable/Disable

To execute counter latch1, the Ch□ Counter Operation Command Counter Latch1 Enable must be set to 1. To execute counter latch2, the Ch□ Counter Operation Command Counter Latch2 Enable must be set to 1. With the Counter Latch Enable bit set to 0, counter latch will not be executed. The Counter Latch1 Enable/Disable Status can be confirmed with the Ch□ Counter Status External Counter Latch1 Enabled Flag. The Counter Latch2 Enable/Disable Status can be confirmed with the Ch□ Counter Status External Counter Latch2 Enabled Flag. When the counter latch enable status is 1, counter latch is enabled; when it is 0, counter latch is disabled.

● Counter Latch Completed Flag

When counter latch1 is completed, Ch□ Counter Status Counter Latch1 Completed Flag will be 1, and latch data will be stored in Ch□ Latch1 Count Data. When counter latch2 is completed, Ch□ Counter Status Counter Latch2 Completed Flag will be 2, and latch data will be stored in Ch□ Latch2 Count data.

The Counter Latch1 Completed Flag can be cleared by changing the Counter Operation Command Counter Latch1 Completed Flag Clear from 0 to 1. The Counter Latch2 Completed Flag can be cleared by changing the Counter Latch2 Completed Flag Clear from 0 to 1.
If the next counter latch occurs before clearing the Counter Latch Completed Flag, once again latch the counter. The Counter Latch Completed Flag will remain at 1.

Additional Information

- Ch□ latch count data overwrites counter values with new values at each latch, discarding the old values.
- In 2ch mode, for Ch1 Latch1 Count Data, the Counter Log Function Latch Log Mode can be used. The Counter Log Mode can store up to 4096 items of past latch count data. Refer to *7-3-9 Counter Log Function* on page 7-44 for details.
- In 2ch mode, counter latch via external input is executed after the input values. However, when counter latch via external input is repeatedly executed, because processing time is required after latch execution, allow an interval between executions of at least 10 μs.
- In 6ch mode, for counter latch via external input, there will be a delay of up to 1 ms from input to processing completion. When counter latch via external input is repeatedly executed, allow an interval between executions of at least 1 ms.

7-3-9 Counter Log Function

This section describes the Counter Log Function.
The Counter Log Function is available only for 2ch mode. Not usable in 6ch mode.

Overview and Applications

This function logs up to 4096 Ch1 count data items inside the Unit. The function is not available for Ch2.
Select and execute either Latch Log Mode or Cyclic Log Mode.
Mode selection is done with the following settings.

Setting name	Description	Default value	Setting range	Unit	Update timing
Counter Log Mode	Select Counter Log Mode. 0: Latch Log Mode. 1: Cyclic Log Mode.	0	0/1	---	After the Unit is restarted

In Latch Log Mode, Ch1 counter latch1 data is stored inside the Unit as up to 4096 log data items. Even when counter latch execution via external input is generated in a faster cycle than the controller data read cycle, this function reads all the latch count data into the controller.
In Cyclic Log Mode, Ch1 present counter values are stored inside the Unit for every set time cycle, as up to 4096 log data items.
By recording the count present values at each fixed cycle, they can be used for analysis of speed changes, etc.

Details on the Function

This section describes the Counter Log Function in detail.

● Latch Log Mode Operation

In 2ch mode, up to 4096 items of Ch1 counter latch1 data can be stored inside the Unit.

The log is stored only with Counter Log Enable. With Counter Log Disable, the log data will not be stored even when counter latch is executed.
Log data saved with Counter Log Enable will not be deleted even with Counter Log Disable. After setting Counter Log Disable, once again use Counter Log Enable; the previous log data will be deleted.

When unread log data reaches 4096 items, log storage will halt and Counter Log Status Counter Log Buffer Full will become 1.

● Cyclic Log Mode Operation

In 2ch mode, present counter values set periodically with Counter Log Cycle Time Setting are read and stored inside the Unit for every period as up to 4096 Ch1 log data items. The period can be set for a range of 1 to 65535 μs.
The Cyclic log period is set as below.

Setting name	Description	Default value	Setting range	Unit	Update timing
Ch1 Counter Log Cycle Time Setting	Set Counter Log cycle time setting.	1000	1 to 65535	μs	After the Unit is restarted

The cyclic log starts when counter log is enabled and stops storage when it is disabled.
Log data saved with Counter Log Enable will not be deleted even with Counter Log Disable. After setting Counter Log Disable, once again use Counter Log Enable; the previous log data will be deleted.
When unread log data reaches 4096 items, log storage will halt and Counter Log Status Counter Log Buffer Full will become 1.

● Counter Log Enable/Disable

To execute counter log, the Counter Log Function must be enabled.
Counter log enable/disable switching includes the following 2 types.

- Set Counter Log to Enable with Ch1 Counter Log Operation Command
- Set Counter Log to Enable with external input

When Ch1 Counter Log Operation Command Counter Log Enable is 1, counter log is enabled; when it is 0, counter log is disabled.

When allocating Counter Log Enable to external input with External Input Function Selection, if both Counter Log Operation Command and External Input are set to Counter Log Enable, the Counter Log Function is enabled and the Counter Log Status Counter Log Enabled Flag changes to 1.
When either Counter Log Operation Command or External Input is set to Counter Log Disable, counter log is disabled. At this time, the Counter Log Status Counter Log Enabled Flag is 0.
When not allocating Counter Log Enable with External Input Function Selection, Counter Log Enable/Disable is determined by the Counter Log Operation Command alone.
The Counter Log Function is available only for Ch1. The function is not available for Ch2.

Setting Counter Log Enable with external input is done with External Input Function selection. Refer to *7-4-3 External Input Function Selection* on page 7-57 for more information on External Input Function Selection.

In 6ch mode, the following settings are disabled.

Setting name	Description	Default value	Setting range	Unit	Update timing
Ch1 External Input0 Counter Log Enable Setting	Sets Ch1 Counter Log Enable/Disable Setting with external input0 to 5. 0: Function not allocated.*1 1: Enable at ON.*2 2: Enable at OFF*3	0	0 to 2	---	After the Unit is restarted
Ch1 External Input1 Counter Log Enable Setting					
Ch1 External Input2 Counter Log Enable Setting					
Ch1 External Input3 Counter Log Enable Setting					
Ch1 External Input4 Counter Log Enable Setting					
Ch1 External Input5 Counter Log Enable Setting					

*1. Counter Log Enable/Disable switching is not done with the relevant external input.
*2. Counter log is enabled with the relevant external input ON and disabled when OFF.
*3. Counter log is enabled with the relevant external input OFF and disabled when ON.

● Counter Log Reading

The Counter Log Function log reading uses the following I/O data.

Data Name	Function	Data type	Default value	I/O Port Name
Ch1 Counter Log Status	Ch1 Counter Log Status	WORD	0000 hex	Ch1 Counter Log Status
Ch1 Counter Log Valid Data Number	Ch1 Counter Log Read Data Valid Data Number	UINT	0	Ch1 Counter Log Valid Data Number
Ch1 Counter Log Data1	Ch1 Counter Log Data1	DINT	0	Ch1 Counter Log Data1
Ch1 Counter Log Data2	Ch1 Counter Log Data2	DINT	0	Ch1 Counter Log Data2
Ch1 Counter Log Data3	Ch1 Counter Log Data3	DINT	0	Ch1 Counter Log Data3
Ch1 Counter Log Data4	Ch1 Counter Log Data4	DINT	0	Ch1 Counter Log Data4
Ch1 Counter Log Data5	Ch1 Counter Log Data5	DINT	0	Ch1 Counter Log Data5
Ch1 Counter Log Data6	Ch1 Counter Log Data6	DINT	0	Ch1 Counter Log Data6
Ch1 Counter Log Data7	Ch1 Counter Log Data7	DINT	0	Ch1 Counter Log Data7
Ch1 Counter Log Data8	Ch1 Counter Log Data8	DINT	0	Ch1 Counter Log Data8
Ch1 Counter Log Data9	Ch1 Counter Log Data9	DINT	0	Ch1 Counter Log Data9
Ch1 Counter Log Data10	Ch1 Counter Log Data10	DINT	0	Ch1 Counter Log Data10
Ch1 Counter Log Data11	Ch1 Counter Log Data11	DINT	0	Ch1 Counter Log Data11
Ch1 Counter Log Data12	Ch1 Counter Log Data12	DINT	0	Ch1 Counter Log Data12
Ch1 Counter Log Data13	Ch1 Counter Log Data13	DINT	0	Ch1 Counter Log Data13
Ch1 Counter Log Data14	Ch1 Counter Log Data14	DINT	0	Ch1 Counter Log Data14
Ch1 Counter Log Data15	Ch1 Counter Log Data15	DINT	0	Ch1 Counter Log Data15
Ch1 Counter Log Data16	Ch1 Counter Log Data16	DINT	0	Ch1 Counter Log Data16

Data Name	Function	Data type	Default value	I/O Port Name
Ch1 Counter Log Operation Command	Ch1 Counter Log Operation Command	WORD	0	Ch1 Counter Log Operation Command

Counter Log Status, Counter Log Valid Data Number, Counter Log Data1 to Counter Log Data16, and Counter Log Operation Command are allocated as I/O data. Allocate Counter Log Data2 to Counter Log Data16 as I/O data in accordance with the data number to be read.

The counter log data stored inside the Unit uses I/O data to transfer up to 16 items at a time. The I/O data transfer number is determined by the counter log data allocated to I/O data. When only Counter Log Data1 is allocated to I/O data, transfer will take place 1 item at a time. When Counter Log Data1 to Counter Log Data12 are allocated to I/O data, transfer of up to 12 items at a time will take place. When allocating counter log data to I/O, be sure to allocate in order from Counter Log Data1. For example, it is not possible to set so that Counter Log Data1 and Counter Log Data3 are allocated, but Counter Log Data2 is not.
When allocation is incorrect, a Counter Log Data I/O Allocation Setting Error event will be generated. Refer to *8-3-3 Error Table* on page 8-6 for event details.

The presence of unread counter log data can be judged by checking the Counter Log Status Counter Log Data Available Flag.
When reading counter log data, set Counter Log Operation Command Counter Log Read Execution to 1 to transfer unread counter log data to I/O data Counter Log Data. When I/O data setting is complete, the Counter Log Status Counter Log Read Execution bit will change to 1 and the transferred log buffer data will be deleted. After checking that Counter Log Read Execution Complete is 1, read the I/O data counter log data. Check the unread valid data number with Counter Log Valid Data Number and read the valid data number from the start of the counter log data with the controller. After reading is complete, set Counter Log Read Execution to 0. When Counter Log Read Execution is set to 0, Counter Log Valid Data Number will become 0.

When 4096 items of log data are stored inside the counter, Counter Log Status Counter Log Buffer Full will become 1. At this time, the Counter Log Status Counter Log Enabled Flag changes to 0 and log data is not updated. To restart the counter log, disable counter log with Operation Command and then enable it again. For Counter Log Enable/Disable with external input, the counter log will not restart. When counter log is restarted, Counter Log Buffer Full will change to 0. However, because pre-restart log data is deleted upon restart, be sure to read required log data before restarting.

Details of the procedure are given below.

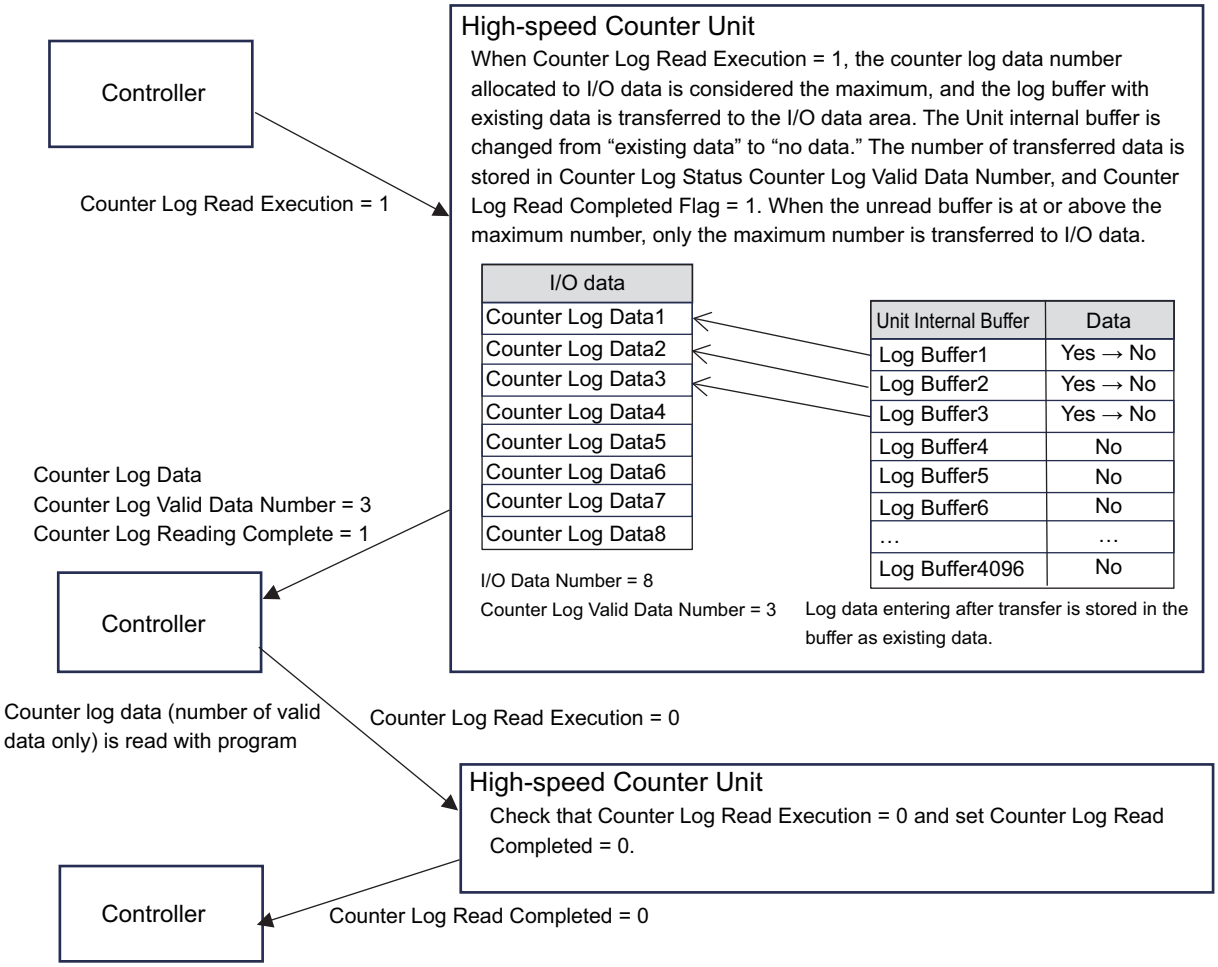

Additional Information

- Refer to *A-4-1 Counter Log Data Read* on page A-61 for the counter log reading program.
- Log data can be read while stored. Because log data is deleted upon reading, the log buffer unused area will increase. Therefore, when the log average reading cycle is shorter than its average writing cycle, continuous storage and reading of log data can be executed.

7-3-10 Pulse Rate Measurement Function

This section describes the Pulse Rate Measurement Function.

Overview and Applications

Measures the input pulse rate (pulse count for every **1 to 65535 ms** time window) for each channel. The measured pulse rate can be used within the controller program for calculating frequency or rotation speed, or for monitoring.

Details on the Function

The pulse count input within the set time window period is stored in the I/O data Ch1 to 6 pulse rate.

Data Name	Function	Data type	Default value	I/O Port Name
Ch1 Pulse Rate	Ch1 Counter Pulse Rate	DINT	0	Ch1 Pulse Rate
Ch2 Pulse Rate	Ch2 Counter Pulse Rate	DINT	0	Ch2 Pulse Rate
Ch3 Pulse Rate*1	Ch3 Counter Pulse Rate	DINT	0	Ch3 Pulse Rate
Ch4 Pulse Rate*1	Ch4 Counter Pulse Rate	DINT	0	Ch4 Pulse Rate
Ch5 Pulse Rate*1	Ch5 Counter Pulse Rate	DINT	0	Ch5 Pulse Rate
Ch6 Pulse Rate*1	Ch6 Counter Pulse Rate	DINT	0	Ch6 Pulse Rate

*1. For 2ch mode, there is no Ch3 to Ch6 pulse rate.

When using the Pulse Rate Function, the Ch□ pulse rate must be allocated to the High-speed Counter Unit I/O allocation. The Ch□ pulse rate is not allocated with default values (set as of shipping).

● Setting

This shows the time window settings for each channel.

Setting name	Description	Default value	Setting range	Unit	Update timing
Ch□ Time Window*1	Sets the time window for Ch□ pulse rate measurement. Set this parameter to 0 to disable pulse rate measurement.	0	0 to 65535	ms	Immediately

*1. Ch□ represents the channel number. Ch1 to 2 in 2ch mode and any of Ch1 to 6 in 6ch mode.

● Measuring the Frequency

The pulse rate value read in the controller user program can be used to calculate the pulse frequency.
Use the following formula to calculate the input pulse frequency.

$$\text{Frequency (kHz)} = \frac{\text{Pulse rate value}}{\text{Time window (ms)}}$$

The time window is set in milliseconds. The unit of the frequency found with the above formula is kHz. Convert the value to the required unit.

● Measuring the Rotation Rate

The pulse rate value read in the controller user program can be used to calculate the rotation rate.
The rotation rate is the number of motor rotations per minute.
Use the following formula to calculate the rotation rate.

$$\text{Rotation rate (r/min)} = \frac{\text{Pulse rate value}}{\text{Encoder resolution (pulses/rotation)}} \times \frac{60000}{\text{Time window (ms)}}$$

Additional Information

- The pulse rate value after counter preset or reset is the pulse rate value calculated immediately before the preset or reset.
- When the counter is a ring counter type, the pulse rate value will be correctly calculated even at rollover (upper limit to 0 or 0 to upper limit).
- In 6ch mode, there is up to ±1 ms variation in the measurement interval. Using the controller user program to average the pulse rate value can reduce variation. In 2ch mode, there is no more than 1 μs variation in the measurement interval.
- When the counter is a ring counter type, the count will not be accurate if the count value change within the time window exceeds half the minimum value to maximum value range. Set the ring counter minimum/maximum values or the time window to suitable values.

Setting Method

This section gives the setting method for Sysmac Studio.
Even if using support software other than Sysmac Studio, set the parameters given in the procedure in the Edit Unit Operation Settings Tab Page and transfer them to the NX Units.
Refer to the operation manual for support software for how to display the Edit Unit Operation Settings Tab Page and how to transfer settings to the NX Unit with support software other than Sysmac Studio.

1 Display the Edit Unit Operation Settings Tab Page.
Refer to *A-8 Displaying the Edit Unit Operation Settings Tab Page* on page A-90 for the display methods.

2 Enter a set value in the **Ch☐ Time Window** text box.
Refer to *A-9 Edit Unit Operation Settings Tab Page* on page A-93 for how to edit unit operation settings.

3 Click the **Transfer to Unit** Button.
The settings are transferred from the Sysmac Studio to the NX Unit.

7-3-11 Pulse Period Measurement Function

This section describes the Pulse Period Measurement Function.
The Pulse Period Measurement Function can be used only in 2ch mode. Not usable in 6ch mode.

Overview and Applications

You can measure the period between the rising edges or falling edges of the input pulse.

For phase-A input pulses, the rate of change of the specified edge is measured and the most recent measurement result for the latest NX bus I/O refresh is returned.
This measurement is not performed in sync with the NX bus synchronization cycle.

Details on the Function

Measures Ch1 A-phase and Ch2 A-phase pulse period and stores to I/O data Ch1 to 2 pulse period measured values.

Data Name	Function	Data type	Default value	I/O Port Name
Ch1 Pulse Period Measured Value	Ch1 A-phase pulse period measured value. The unit is 100 ns.	UDINT	0	Ch1 Pulse Period Measured Value
Ch2 Pulse Period Measured Value	Ch2 A-phase pulse period measured value. The unit is 100 ns.	UDINT	0	Ch2 Pulse Period Measured Value

The Pulse Period Measurement Function specifications are as below.

Item	Specifications	Remarks
Measurement target	Phase-A input pulse	Measures the pulse frequency according to the specifications listed in the column to the left, regardless of the pulse input method, counting direction, or multiplier.
Detection method	• Between rising edges • Between falling edges • Between both edges	
Measurable range	1 to 4294967295 (× 100 ns) (100 ns to 429.4967295 s)	If the maximum measurable value is exceeded, the value returns to zero.
Measurement resolution (minimum measurement unit)	100 ns	---

Set the detection method with the parameters below.

Parameter name	Setting	Default value	Remarks
Ch1 Edge Detection Method	0: Disable the function. 1: Measure every rising edge. 2: Measure every falling edge. 3: Measure every rising and falling edge.	0	Changes are applied when the power supply to the NX Unit is turned ON or the NX Unit is restarted.
Ch2 Edge Detection Method			

The High-speed Counter Unit contains a pulse period measurement internal counter for pulse period measurement. The pulse period measurement internal counter increases the counter value by an increment of +1 every 100 ns. When the Pulse Period Measurement Command Pulse Period Measurement Enable is changed from 0: Disable to 1: Enable, the Counter Status Pulse Period Measurement Enabled Status becomes 1: Pulse Period Measurement Enabled. When the measurement target edge is detected after enabling, the pulse period measurement internal counter begins counting from 0. After measurement begins, the pulse period measured value is updated in the pulse period measurement internal counter content every time the measurement target edge is detected; the pulse period measurement internal counter begins the next count from 0.

After that, when Pulse Period Measurement Enable is changed from 1: Enable to 0: Disable, the pulse period measurement internal counter retains the immediately previous value, but the pulse period measured value becomes 0 and the Counter Status Pulse Period Measurement Enabled Status becomes 0: Pulse Period Measurement Disabled.
To clear the pulse period measured value to 0 during measurement, change the Pulse Period Measurement Command Pulse Period Measurement Value Clear from 0 to 1. When the clear is complete, Counter Status Pulse Period Measurement Value Clear Completed becomes 1: Pulse Period Measurement Value Clear Completed.
When the Pulse Period Measurement Command Pulse Period Measurement Value Clear is changed from 1 to 0, the Counter Status Pulse Period Measurement Value Clear Completed becomes 0.

The internal Unit counter for the pulse period measured value is a ring counter. Upon reaching the counter upper limit (4294967295), the Counter Status Pulse Period Measurement Value Overflow Flag becomes 1: Pulse Period Measurement Value Overflow Generated, and the pulse period measurement internal counter continues to count from 0.
The Pulse Period Measurement Value Overflow Flag is cleared in the following cases.

- When the Pulse Period Measurement Command Pulse Period Measurement Value Overflow Flag Clear is changed from 0 to 1
- When the Pulse Period Measurement Command Pulse Period Measurement Enable is changed from 1: Enable to 0: Disable
- When the Pulse Period Measurement Command Pulse Period Measurement Value Clear is changed from 0 to 1

Operation with the edge detection method set to 3. Measure every rising and falling edge is as below.

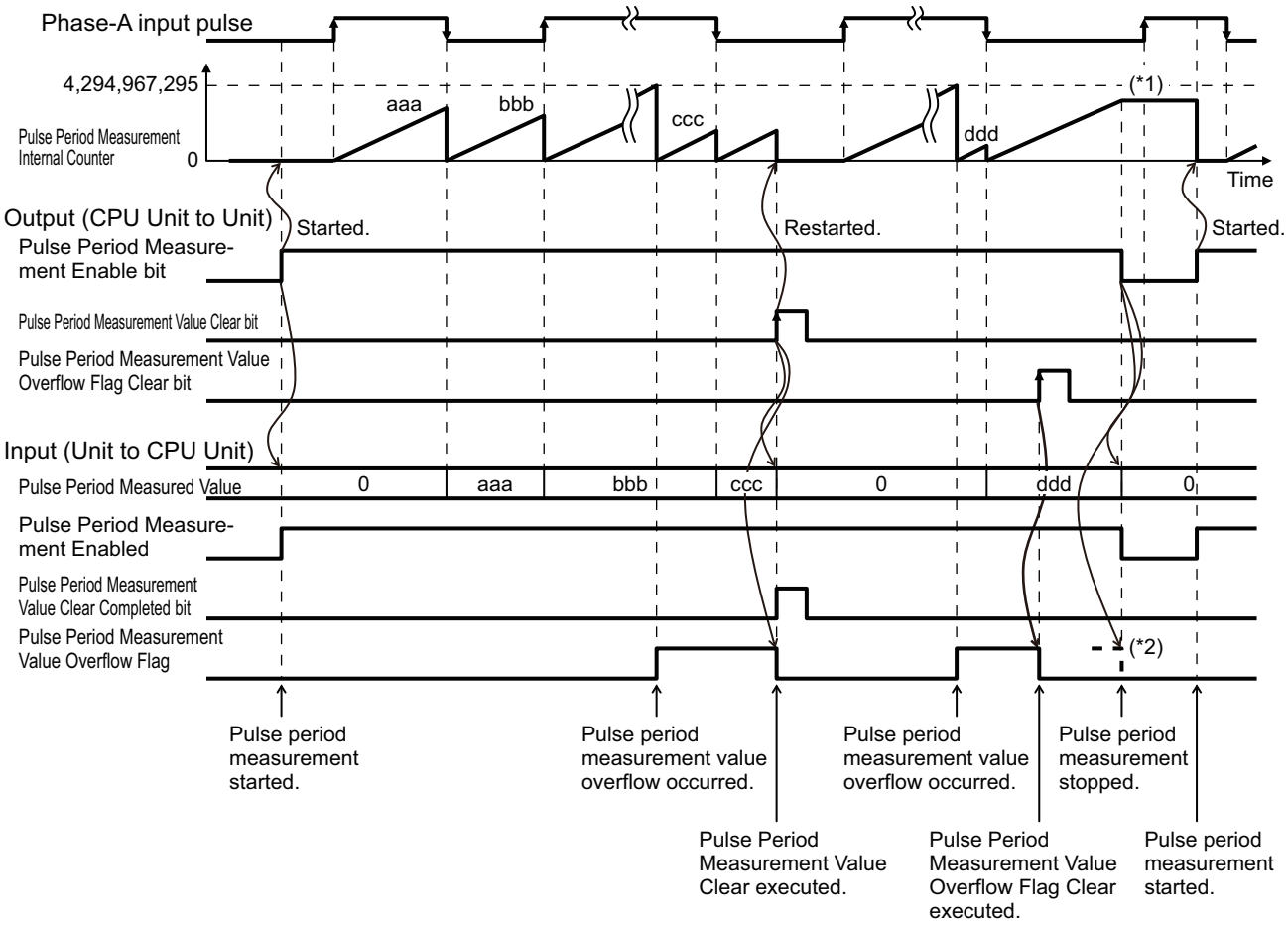

*1. The pulse period measurement internal counter retains the most recent value while the function is disabled.
*2. The operation is reset if the Overflow Flag is ON when the function is disabled.

Additional Information

The counter noise filter can cause pulse period measurement function errors. To reduce these, set the counter noise filter to a high frequency.

7-3-12 Time Stamping

The Time Stamping Function operates only in 2ch mode. It does not operate in 6ch mode.

Overview and Applications

Time stamping is a function that stores the DC time with present counter value obtained in I/O data when the present counter value has changed from the previous value.

Details on the Function

When changed from the present counter value previously obtained during High-speed Counter Unit present counter value acquisition, the acquired present counter value DC time is saved in the I/O data below.
The obtained DC time is called a time stamp.

Data Name	Function	Data type	Default value	I/O Port Name
Ch1 Time Stamp	Ch1 Counter Time Stamp	ULINT	0	Ch1 Time Stamp
Ch2 Time Stamp	Ch2 Counter Time Stamp	ULINT	0	Ch2 Time Stamp

When using the Time Stamping Function, a Ch□ time stamp must be allocated in High-speed Counter Unit I/O allocation. Ch□ time stamps are not allocated with default values (set as of shipping).

Present counter values are obtained when NX bus I/O is refreshed.

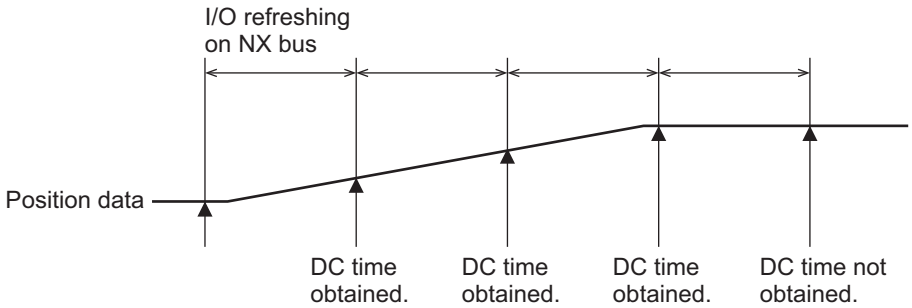

If there was no change in the count data, the time stamp is not updated and so the previous time stamp is retained.

Additional Information

- Usable with EtherCAT communications in DC mode in combination with an EtherCAT Coupler Unit of Ver.1.1 or later, and when connected to a CPU Unit.
- Time stamping is supported only when synchronous I/O refreshing is used. When Free-Run refreshing is used, the data will always be 0.

7-4 External Input Function

This section describes the External Input Function.

7-4-1 External Input Noise Filter

This section describes the External Input Noise Filter.

Overview and Applications

This function prevents data changes and stabilizes data when external input signal contact status is unstable due to the influence of chattering or noise. External inputs0 to 5 are common for external input noise filter setting.

Details on the Function

Read the inputs 3 times at a 1/3 interval of the input filter time. When all inputs are ON or OFF, the input values turn ON or OFF.

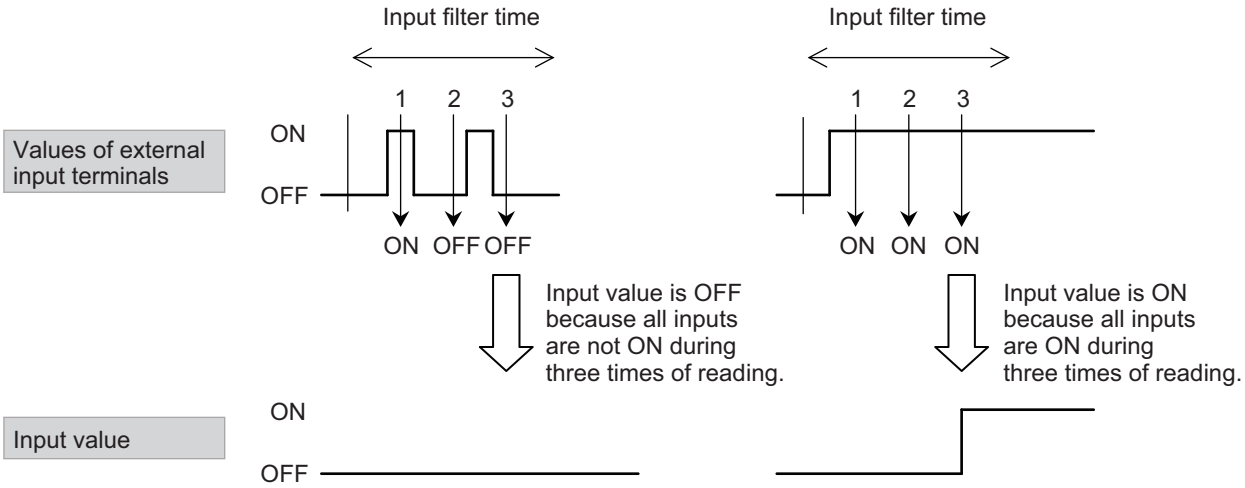

With the settings below, select the External Input Noise Filter time constant.

Setting name	Description	Default value	Setting range	Unit	Update timing
External Input Noise Filter	Sets the time constant for external input0 to 5 noise filter. 0: 1 μs 1: 5 μs 2: 10 μs 3: 50 μs 4: 100 μs 5: 500 μs 6: 1 ms 7: 5 ms 8: 10 ms	3 (50 μs)	0 to 8	---	After the Unit is restarted

Setting Method

This section gives the setting method for Sysmac Studio.
Even if using support software other than Sysmac Studio, set the parameters given in the procedure in the Edit Unit Operation Settings Tab Page and transfer them to the NX Units.
Refer to the operation manual for support software for how to display the Edit Unit Operation Settings Tab Page and how to transfer settings to the NX Unit with support software other than Sysmac Studio.

1 Display the Edit Unit Operation Settings Tab Page.
Refer to *A-8 Displaying the Edit Unit Operation Settings Tab Page* on page A-90 for the display methods.

2 Select the time constant to be set from the **External Input Noise Filter** list.
Refer to *A-9 Edit Unit Operation Settings Tab Page* on page A-93 for how to edit unit operation settings.

3 Click the **Transfer to Unit** Button.
The settings are transferred from the Sysmac Studio to the NX Unit.
The settings are reflected after the Unit is restarted.

7-4-2 External Input Status

This section describes the external input status.

Overview and Applications

External input0 to 5 ON/OFF status can be confirmed with External Input Status.
By confirming the External Input Status, external input can be used as general-purpose digital input.

Details on the Function

External input ON/OFF status can be read with I/O data External Input Status.
Refer to *External Input Status* on page 6-15 for details of aggregated data.

Data Name	Function	Data type	Default value	I/O Port Name
External Input Status	Aggregated external input status data.	WORD	0000 hex	External Input Status

Additional Information

External input ON/OFF status can be confirmed with External Input Status when allocating gate control, counter reset, counter preset, latch function, and counter log enable/disable to external input as well.

7-4-3 External Input Function Selection

Describes External Input Function selection.

Overview and Applications

Gate Control, Counter Reset, Counter Preset, Counter Latch, and Counter Log Enable/Disable Functions can be allocated to external input in 2ch mode. Multiple functions can be allocated to 1 external input.
Counter Reset, Counter Preset, and Counter Latch Functions can be allocated to external input in 6ch mode. Also, the counter function can be allocated only to input terminal 0 for Ch1, input terminal 1 for Ch2, input terminal 2 for Ch3, input terminal 3 for Ch4, input terminal 4 for Ch5, and input terminal 5 for Ch6. Multiple functions can be allocated to 1 external input.

Details on the Function

External Input Function Selection in 2ch mode requires the following settings.
- Ch□ External Input0 to 5 Gate Control Enable/Disable Setting
- Ch□ External Input0 to 5 Reset Execution Conditions Setting
- Ch□ External Input0 to 5 Preset Execution Conditions Setting
- Ch□ External Input0 to 5 Latch1 Execution Conditions Setting
- Ch□ External Input0 to 5 Latch2 Execution Conditions Setting
- Ch□ External Input0 to 5 Counter Log Enable Setting

External Input Function Selection in 6ch mode requires the following settings.
- Ch□ External Input0 to 5 Reset Execution Conditions Setting
- Ch□ External Input0 to 5 Preset Execution Conditions Setting
- Ch□ External Input0 to 5 Latch1 Execution Conditions Setting

However, the counter function can be allocated only to input terminal 0 for Ch1, input terminal 1 for Ch2, input terminal 2 for Ch3, input terminal 3 for Ch4, input terminal 4 for Ch5, and input terminal 5 for Ch6.

Multiple functions can be allocated to 1 external input.

See below for details on the settings.

- *7-3-5 Gate control* on page 7-28
- *7-3-6 Counter reset* on page 7-30
- *7-3-7 Counter Preset* on page 7-35
- *7-3-8 Counter Latch* on page 7-40
- *7-3-9 Counter Log Function* on page 7-44

Additional Information

- With multiple functions allocated to 1 external input, the following operation will take place when multiple operations are executed at once.

Simultaneously operating functions		Description of operation
Counter Preset Execution	Counter Reset Execution	Because counter reset is executed immediately after counter preset, the counter value will end up being cleared.
Counter Latch Execution	Counter Reset Execution	Counter reset will be executed after counter latch is executed.
Counter Latch Execution	Counter Preset Execution	Counter preset will be executed after counter latch is executed.
Counter Latch Execution	In Latch Log Mode Counter log changed from Enable to Disable	Counter log disable operation will take place after latch data is stored in latch log.
Counter Latch Execution	In Latch Log Mode Counter log changed from Disable to Enable	Counter log enable operation will take place without storing latch data in latch log.

- When allocating the same function in the same channel to multiple external inputs, the following operation will take place.

Function allocated to multiple external inputs	Description of operation
Gate control	Operation command and all the allocated external inputs will be permitted to count only when gate is open.
Counter Reset Execution Counter Preset Execution Counter Latch Execution	If operation command and at least 1 of the allocated external inputs are executed, the function will operate.
Counter Log Enable/Disable	The function will be enabled only when operation command and all the allocated external inputs are enabled.

- The function execution interval by 1 external input should be at least 1 ms. For intervals of less than 1 ms, the function may not be executed. However, when repeating counter latch in 2ch mode, if the interval is at least 10 μs, processing will be executed and data can be saved via the Latch Log Function.
  Even if function execution takes place simultaneously with other external inputs, processing will be executed normally.

7-5 Comparison Function

This section describes the comparison function.

7-5-1 Comparison Function Mode Switching

This section describes the comparison function mode in 2ch mode.
Comparison function mode switching is not available in 6ch mode.

Overview and Applications

With regard to the High-speed Counter Unit comparison function, for 2ch mode, select either Target Comparison Mode or Range Comparison Mode. For 6ch mode, which has only Range Comparison Mode, selection is not required.
The available functions and performance differ between Target Comparison Mode and Range Comparison Mode. Select a mode suited to the application.

Details on the Function

For 2ch mode, select either Target Comparison Mode or Range Comparison Mode.

● Setting

This shows the setting items for comparison function mode switching.
In 6ch mode, the following settings are disabled.

Setting name	Description	Default value	Setting range	Unit	Update timing
Comparison Function Mode	Sets Comparison Mode in 2ch mode. 0: Target Comparison Mode. 1: Range Comparison Mode.	0	0/1	---	After the Unit is restarted

● Differences Between Target Comparison Mode and Range Comparison Mode

Below the differences between Target Comparison Mode and Range Comparison Mode are shown.

Function	Target comparison	2ch mode Range comparison	6ch mode Range comparison
Comparison method	When adding or subtracting, detects when the present counter value matches the target value.	Detects when the present counter value is within the lower to upper limit range.	
Comparison data number	32/Ch target data (target comparison data0 to 31) items can be set.	32/Ch target data (range comparison data0 to 31) items can be set.	1/Ch target data (range comparison data0) item can be set.

Function	Target comparison	2ch mode Range comparison	6ch mode Range comparison
Comparison data items	Target Value Advance Time Addition matching output pattern Subtraction matching output pattern	Upper limit Lower limit Output pattern	Upper limit Lower limit
Unit interior storage of comparison data default values	Comparison data0 to 3 default values can be saved inside the Unit. Comparison data4 to 31 default values cannot be saved inside the Unit. They must be written from a user program when power is turned ON.	Comparison data0 default value can be saved inside the Unit. Comparison data1 to 31 default values cannot be saved inside the Unit. They must be written from a user program when power is turned ON.	Comparison data0 default value can be saved inside the Unit.
Advance Time Function*1	Yes	None	None
Output pattern	When target match is detected, setting/resetting is issued with arbitrary external output0 to 5, or else Ch1 or Ch2 counter reset/counter preset is executed.	Detection within the range turns arbitrary external output0 to 5 ON/OFF.	Detection within the range turns the stipulated external output ON/OFF.
Comparison processing response time*2	1 μs max.	0.5 ms max.*3	0.5 ms max.*3
Output Pattern Setting at Counter Reset/Counter Preset	Yes	None	None
Comparison Data Enable/Disable Setting	Comparison data0 to 31 enable/disable can each be set.		Comparison data0 enable/disable can be set.
Hysteresis Setting	None	Yes	None
External Output Inter-Channel Logical Setting*4	None	Yes	None

*1. This function conducts target comparison earlier against target matching by the time set.

*2. Response time is the time from receiving the count pulse until the comparison function turns external output ON/OFF. However, this does not include external output response time and counter noise filter delay time.

*3. When changing comparison data settings with range comparison, the response time may be longer than 0.5 ms for the following operation execution.
- Output Delay Function
- Counter Reset with External Input
- Counter Preset with External Input
- Counter Latch with External Input

*4. When allocating Ch1 and Ch2 range comparison output patterns to the same external output, the output logic can be selected from AND and OR.

Setting Method

For 2ch mode, select Target Comparison Mode or Range Comparison Mode.
This section gives the setting method for Sysmac Studio.
Even if using support software other than Sysmac Studio, set the parameters given in the procedure in the Edit Unit Operation Settings Tab Page and transfer them to the NX Units.
Refer to the operation manual for support software for how to display the Edit Unit Operation Settings Tab Page and how to transfer settings to the NX Unit with support software other than Sysmac Studio.

1 Display the Edit Unit Operation Settings Tab Page.
Refer to *A-8 Displaying the Edit Unit Operation Settings Tab Page* on page A-90 for the display methods.

2 Select either **Target Comparison Mode** or **Range Comparison Mode** from the **Comparison Function Mode Setting** list.
Refer to *A-9 Edit Unit Operation Settings Tab Page* on page A-93 for how to edit unit operation settings.

3 Click the **Transfer to Unit** Button.
The settings are transferred from the Sysmac Studio to the NX Unit.
The settings are reflected after the Unit is restarted.

7-5-2 Target Comparison

This section describes target comparison.
Target comparison can be used only in 2ch mode.

Overview and Applications

When adding or subtracting, it is possible to detect the present counter value matching the target value and conduct external output ON, counter reset/preset, and PWM output execution/setting change/stop.
Ch1 and Ch2 can handle 32 Target Comparison Data items each.
Target comparison data is composed of the following 4 data contents.

- Target Value
- Advance Time Setting
- Output pattern at addition match
- Output pattern at subtraction match

Target Comparison Data0 to 31 can be set to Enable/Disable with Comparison Setting Data Enable.
When performing comparison operation with the set Target Comparison Data, be sure to set Comparison Setting Data Enable to Enabled.
When using target comparison, be sure to allocate Comparison Data Setting Enable to I/O data and to enable the comparison data to be used.

With the advance time setting, target comparison can be output a set amount of time earlier than its timing.

Normally, delay in the operation of external devices connected to output will cause devices to operate at a delay equivalent to the operation time even when output follows target comparison timing. With the advance time setting, external device operation will start at the same time as target comparison.

Output pattern when counter reset or counter preset takes place can be set. Target comparison will not operate when counter reset or counter preset exceeds the target value. When output must be changed, use the counter reset or counter preset output pattern setting.

Additional Information

External output can be turned ON/OFF within 1 μs or less from target comparison detection. However, this does not include external output response time and counter noise filter delay time.

Details on the Function

When adding or subtracting, detects when the present counter value matches the target value.
Ch1 and Ch2 can handle 32 Target Comparison Data items each.
Target comparison data is composed of the following 4 data contents.

Data	Description
Target Value	Sets target value for target comparison.
Advance Time Setting	Target comparison can be output a set amount of time earlier than its timing.
Output pattern at addition match	When external output is set to 0: Disable, the output will not change even upon addition matching. When external output is set to 1: Enable, it will set or reset in accordance with the setting when an addition match takes place. Also, when counter reset/preset is set to 1: Enable, counter reset or counter preset will take place in accordance with the setting when an addition match takes place.
Output pattern at subtraction match	When external output is set to 0: Disable, the output will not change even upon subtraction matching. When external output is set to 1: Enable, it will set or reset in accordance with the setting when a subtraction match takes place. Also, when counter reset/preset is set to 1: Enable, counter reset or counter preset will take place in accordance with the setting when a subtraction match takes place.

External output can be set/reset or remain unchanged in accordance with the addition match output pattern and subtraction match output pattern, in the order which the Ch1 and Ch2 counter values match the target value. External output turns ON when set and OFF when reset. If set when ON or reset when OFF, the ON/OFF status will not change.
Also, when external output is set to PWM output, PWM execution or settings change will take place when set and PWM stop when reset. Refer to *7-6-2 PWM Output Function* on page 7-93 for details.

Target Comparison Data set to Disabled with Comparison Setting Data Enable1 and Comparison Setting Data Enable2 will not conduct comparison operation. Only when set to Enabled will comparison operation take place.

Target Comparison Mode can be applied to ring counter and linear counter.
Below is a setting example of Target Comparison Mode in linear mode.

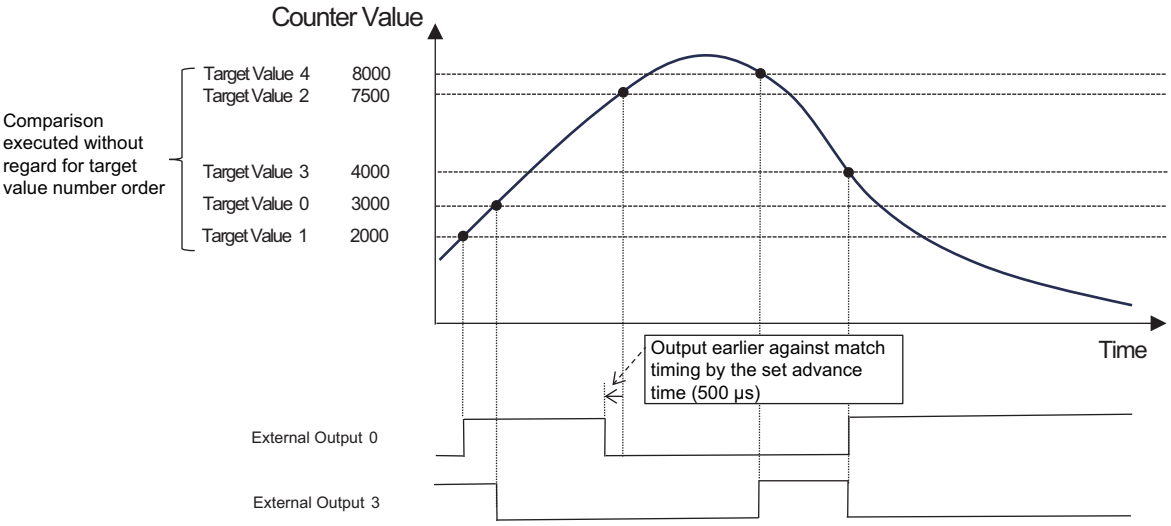

Target Comparison Data	Target Value	Advance Time (μs)	Addition matching output pattern	Subtraction matching output pattern
0	3000	0	External Output3 Reset	---
1	2000	0	External Output0 Set	---
2	7500	500	External Output0 Reset	---
3	4000	0	---	External Output0 Set External Output3 Reset
4	8000	0	---	External Output3 Set

Below is a setting example of Target Comparison Mode in ring mode.

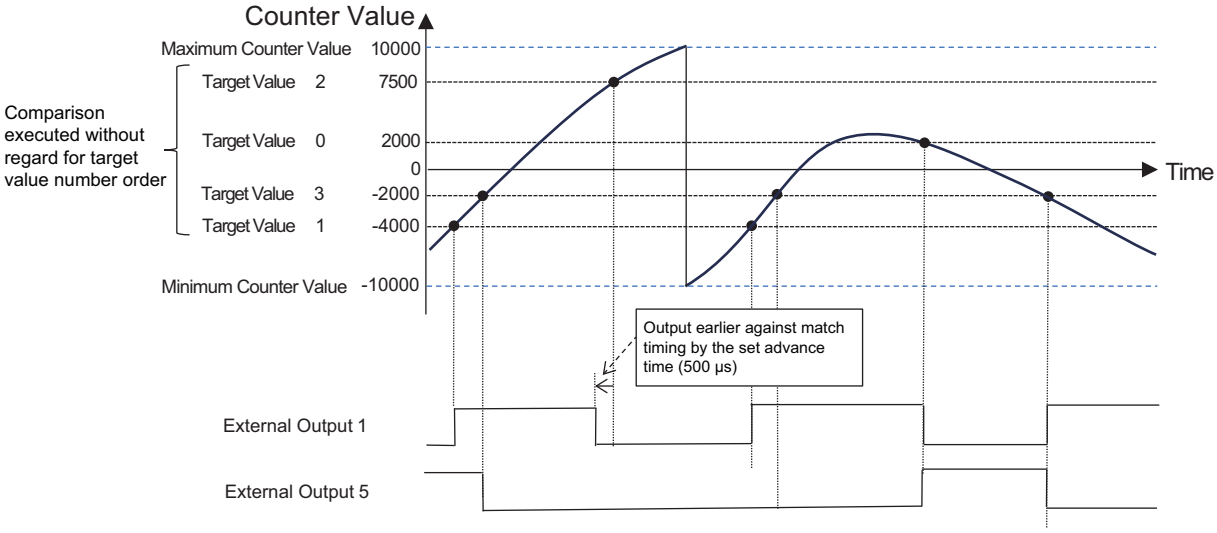

Target Comparison Data	Target Value	Advance Time (μs)	Addition matching output pattern	Subtraction matching output pattern
0	2000	0	---	External Output1 Reset
1	-4000	0	External Output1 Set	---
2	7500	500	External Output1 Reset	---
3	-2000	0	External Output5 Reset	External Output1 Set External Output5 Reset

For target comparison data setting, leave an interval of at least 1 ms from the target value match until the next target match in the same channel. Comparison operation stops for up to 1 ms from the counter value target comparison data target value match. When setting advance time, keep in mind correction using advance time and set intervals of at least 1 ms. Comparison operation will restart after a comparison stop period of up to 1 ms, but comparison content within the stop period will not be reflected.

However, because comparison operation on other channels' counter does not stop, there is no need for a 1 ms interval between target matches in other channels.

For example, when the counter pulse frequency is 100 kHz with the settings below, confirm that the interval between target value0 and target value1 is at least 1 ms.

Target Comparison Data	Target Value	Advance Time (μs)	Addition matching output pattern	Subtraction matching output pattern
0	100	100	External Output0 Set	---
1	250	1000	External Output0 Reset	---

When the counter pulse frequency is 100 kHz, the interval between target value0 and target value1 before advance time correction is 1.5 ms as found with the formula below.

(250 - 100)/100 kHz = 1.5 ms

Because the target value0 advance time setting is 100 μs and the target value1 advance time setting is 1000 μs, the interval between the two after advance time correction is 0.6 ms as found with the formula below.

1.5 ms + 100 μs - 1000 μs = 0.6 ms

In the above case, because target comparison data is at or below 1 ms, external output0 OFF via target value1 may not be executed.

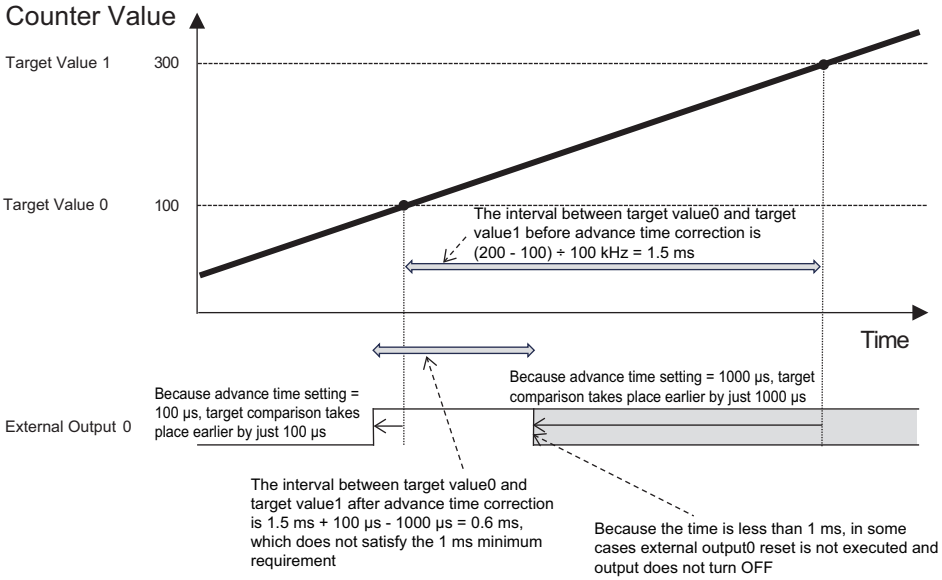

Precautions for Correct Use

When setting the target value to 2147483647 or -2147483648 for the operation of linear counter, set the advance time of the target value to 0 μs (default).
If not satisfied, comparison operation may not be correctly performed.

Additional Information

- Target comparison will not be executed when counter reset or counter preset exceeds the target value.
- Comparison operation stops for up to 1 ms from counter reset or counter preset. However, comparison operation on other channels' counter does not stop.
  When setting target comparison data, keep in mind this comparison operation stop time.
  Comparison operation will restart after a comparison stop period, but comparison content within the stop period will not be reflected. External output upon counter reset or counter preset operates in accordance with the Counter Reset/Preset Output Pattern settings.
- When the Counter Type is set to ring counter, set the Maximum Counter Value and Minimum Counter Value so as to satisfy the following formula including the pulse frequency. If not satisfied, comparison operation may not be correctly performed.
  (Maximum Counter Value - Minimum Counter Value) > 0.512 x Pulse Frequency Maximum Value (kHz)
  For example, when the pulse frequency maximum value is 100 kHz, (Maximum Counter Value - Minimum Counter Value) must be set to 52 or above.
- Do not switch the addition/subtraction count direction near the target value. If the count direction is switched near the target value, the High-speed Counter Unit may not be able to detect an addition or subtraction match to the target value correctly.

● Target Comparison Data Writing

Target comparison data writing is done with command formats using the following I/O data.

Data Name	Function	Data type	Default value	I/O Port Name
Comparison Setting Status*1	Aggregated comparison setting status data. Used when writing or reading target comparison data or range comparison data.	WORD	0000 hex	Comparison Setting Status
Comparison Setting Command*2	Aggregated comparison setting command data. Used when writing or reading target comparison data or range comparison data.	WORD	0000 hex	Comparison Setting Command
Comparison Setting Data Number	Sets comparison data number when writing or reading target comparison data or range comparison data. The setting range is from 0 to 31.	UINT	0	Comparison Setting Data Number
Target Value of Target Comparison Write Data	Target value when writing target comparison data.	DINT	0	Target Value of Target Comparison Write Data
Advance Time of Target Comparison Write Data	Advance time when writing target comparison data. The unit is μs.	UINT	0	Advance Time of Target Comparison Write Data
pCV Crossing Output Pattern of Target Comparison Write Data*3	Aggregated target comparison addition match output pattern data when writing target comparison data.	WORD	0000 hex	pCV Crossing Output Pattern of Target Comparison Write Data
mCV Crossing Output Pattern of Target Comparison Write Data*4	Aggregated target comparison addition subtraction output pattern data when writing target comparison data.	WORD	0000 hex	mCV Crossing Output Pattern of Target Comparison Write Data

*1. Refer to *Comparison Setting Status* on page 6-16 for details of aggregated data.
*2. Refer to *Comparison Setting Commands* on page 6-27 for details of aggregated data.
*3. Refer to *pCV Crossing Output Pattern of Target Comparison Write Data* on page 6-28 for details of aggregated data.
*4. Refer to *mCV Crossing Output Pattern of Target Comparison Write Data* on page 6-29 for details of aggregated data.

When writing, the items above are allocated as I/O data. The allocation of Advance Time of Target Comparison Write Data, pCV Crossing Output Pattern of Target Comparison Write Data, and mCV Crossing Output Pattern of Target Comparison Write Data is not required. Allocation is not necessary when not in use.

Store data as Target Value of Target Comparison Write Data, Advance Time of Target Comparison Write Data, pCV Crossing Output Pattern of Target Comparison Write Data, and mCV Crossing Output Pattern of Target Comparison Write Data. Set the comparison setting data number to write and set Read/Write to 1: Write; then set the comparison setting command Ch□ Comparison Data Setting Request to 1. This makes it possible to set target comparison for the writing channel.

When writing is complete, the comparison setting status Comparison Data Setting Completed bit will change to 1. After confirming that Comparison Data Setting Completed is now 1, set Ch□ Comparison Data Setting Request to 0.

If any of the conditions below is met during writing, when the comparison setting status Comparison Data Setting Completed bit becomes 1, the Comparison Data Setting Error Flag will become 1 at the same time and the target comparison data will not be written.
The Comparison Data Setting Error Flag is cleared when Ch□ Comparison Data Setting Request is set to 0.

- Target value set out of range.
- Comparison Data Setting Request multiple bits set simultaneously to 1.
- Comparison Setting Data Number set out of range.

The target value set for target comparison data is deleted by power OFF or Unit restart. When power is turned ON or when restarting, set again.
However, Target Comparison Data0 to 3 must be set to default values at power ON or restart as a parameter setting.
The default values for Target Comparison Data0 to 3 are given in the following table.
If default values are set out of range, a Comparison Initial Data Setting Error event will occur. Refer to *8-3-3 Error Table* on page 8-6 for event details.

Setting name	Description	Default value	Setting range	Unit	Update timing
Ch□ Target Comparison Data0 Initial Target Value*1	Sets initial value for Ch□ Target Comparison Data0.	0	-2147483648 to 2147483647*2	---	After the Unit is restarted
Ch□ Target Comparison Data0 Initial Advance Time*1		0	0 to 65536	μs	
Ch□ Target Comparison Data0 Initial pCV Output Pattern*1		0000 hex	0000 to FFFF	---	
Ch□ Target Comparison Data0 Initial mCV Output Pattern*1		0000 hex	0000 to FFFF	---	
Ch□ Target Comparison Data1 Initial Target Value*1	Sets initial value for Ch□ Target Comparison Data1.	0	-2147483648 to 2147483647*2	---	
Ch□ Target Comparison Data1 Initial Advance Time*1		0	0 to 65536	μs	
Ch□ Target Comparison Data1 Initial pCV Output Pattern*1		0000 hex	0000 to FFFF	---	
Ch□ Target Comparison Data1 Initial mCV Output Pattern*1		0000 hex	0000 to FFFF	---	

Setting name	Description	Default value	Setting range	Unit	Update timing
Ch□ Target Comparison Data2 Initial Target Value*1	Sets initial value for Ch□ Target Comparison Data2.	0	-2147483648 to 2147483647*2	---	
Ch□ Target Comparison Data2 Initial Advance Time*1		0	0 to 65536	μs	
Ch□ Target Comparison Data2 Initial pCV Output Pattern*1		0000 hex	0000 to FFFF	---	
Ch□ Target Comparison Data2 Initial mCV Output Pattern*1		0000 hex	0000 to FFFF	---	
Ch□ Target Comparison Data3 Initial Target Value*1	Sets initial value for Ch□ Target Comparison Data3.	0	-2147483648 to 2147483647*2	---	
Ch□ Target Comparison Data3 Initial Advance Time*1		0	0 to 65536	μs	
Ch□ Target Comparison Data3 Initial pCV Output Pattern*1		0000 hex	0000 to FFFF	---	
Ch□ Target Comparison Data3 Initial mCV Output Pattern*1		0000 hex	0000 to FFFF	---	

*1. Ch□ represents the channel number. In this item, it is either Ch1 or Ch2.

*2. Set the Initial Target Value within the range of the Minimum Counter Value to the Maximum Counter Value. When set out of range, comparison operation will not take place.

Additional Information

- Refer to *A-4-2 Writing/Reading Target Comparison Data* on page A-67 for the target comparison data writing program.
- Comparison operation will continue even during target comparison data writing.

Reading Target Comparison Data

Target comparison data reading is done with command formats using the following I/O data.

Data Name	Function	Data type	Default value	I/O Port Name
Comparison Setting Status*1	Aggregated comparison setting status data. Used when writing or reading target comparison data or range comparison data.	WORD	0000 hex	Comparison Setting Status
Target Value of Target Comparison Read Data	Target values when target comparison data has been read are stored.	DINT	0	Target Value of Target Comparison Read Data
Advance Time of Target Comparison Read Data	Advance time when target comparison data has been read is stored.	UINT	0	Advance Time of Target Comparison Read Data
pCV Crossing Output Pattern of Target Comparison Read Data*2	Addition matching output patterns when target comparison data has been read are stored.	WORD	0000 hex	pCV Crossing Output Pattern of Target Comparison Read Data
mCV Crossing Output Pattern of Target Comparison Read Data*3	Subtraction matching output patterns when target comparison data has been read are stored.	WORD	0000 hex	mCV Crossing Output Pattern of Target Comparison Read Data
Comparison Setting Command*4	Aggregated comparison setting command data. Used when writing or reading target comparison data or range comparison data.	WORD	0000 hex	Comparison Setting Command
Comparison Setting Data Number	Sets comparison data number when writing or reading target comparison data or range comparison data. The setting range is from 0 to 31.	UINT	0	Comparison Setting Data Number

*1. Refer to *Comparison Setting Status* on page 6-16 for details of aggregated data.
*2. Refer to *pCV Crossing Output Pattern of Target Comparison Read Data* on page 6-17 for details of aggregated data.
*3. Refer to *mCV Crossing Output Pattern of Target Comparison Read Data* on page 6-18 for details of aggregated data.
*4. Refer to *Comparison Setting Commands* on page 6-27 for details of aggregated data.

For reading, the items above are allocated as I/O data. The allocation of Target Value of Target Comparison Read Data, Advance Time of Target Comparison Read Data, pCV Crossing Output Pattern of Target Comparison Read Data, and mCV Crossing Output Pattern of Target Comparison Read Data is not required. Allocation is not necessary when not reading.

After setting the comparison setting data number to be read to the Comparison Setting Data Number and using the Comparison Setting Command to set Read/Write to 0: Read, set the read channel Ch□ comparison data setting request to 1.
When reading is complete, the comparison setting status Comparison Data Setting Completed bit will change to 1. The read data will be stored in Target Value of Target Comparison Read Data,

Advance Time of Target Comparison Read Data, pCV Crossing Output Pattern of Target Comparison Read Data, and mCV Crossing Output Pattern of Target Comparison Read Data. After confirming that Comparison Data Setting Completed is now 1, set Ch□ Comparison Data Setting Request to 0.

When one of the following conditions is met at reading and the Comparison Setting Status Comparison Data Setting Completed bit changes to 1, the Comparison Data Read Error Flag will change to 1 and the Target Value of Target Comparison Read Data, Advance Time of Target Comparison Read Data, pCV Crossing Output Pattern of Target Comparison Read Data, and mCV Crossing Output Pattern of Target Comparison Read Data will all change to 0.
The Comparison Data Read Error Flag is cleared when Ch□ Comparison Data Setting Request is set to 0.

- No valid data when reading settings. (not written)
- Comparison Data Setting Request multiple bits set simultaneously to 1.
- Comparison Setting Data Number set out of range.

Additional Information

Refer to *A-4-2 Writing/Reading Target Comparison Data* on page A-67 for the target comparison data reading program.

Target Comparison Data Enable Setting

Target comparison data0 to 31 enable/disable can be set for each channel.
Target Comparison Data Enable/Disable setting is set for each channel with I/O data Target Comparison Setting Data Enable1 and Target Comparison Data Setting Data Enable2.

Data Name	Function	Data type	Default value	I/O Port Name
Ch1 Comparison Setting Data Enable1*1	Aggregated Comparison Setting Data Enable1 data. Target comparison data0 to 15 enable/disable can be set for each channel.	WORD	0000 hex	Ch1 Comparison Setting Data Enable1
Ch2 Comparison Setting Data Enable1*1		WORD	0000 hex	Ch2 Comparison Setting Data Enable1
Ch1 Comparison Setting Data Enable2*2	Aggregated Comparison Setting Data Enable2 data. Target comparison data16 to 31 enable/disable can be set for each channel.	WORD	0000 hex	Ch1 Comparison Setting Data Enable2
Ch2 Comparison Setting Data Enable2*2		WORD	0000 hex	Ch2 Comparison Setting Data Enable2

*1. Refer to *Ch□ Comparison Setting Data Enable1* on page 6-34 for details of aggregated data.
*2. Refer to *Ch□ Comparison Setting Data Enable2* on page 6-35 for details of aggregated data.

For target comparison, the items above are allocated as I/O data. Comparison Setting Data Enable1 is the setting for Target Comparison Data0 to 15; Comparison Setting Data Enable2 is the setting for Target Comparison Data16 to 31. When only using Target Comparison Data0 to 15, allocation of Comparison Setting Data Enable2 is not required. When not allocated as I/O data, it will be processed as disabled.

When setting comparison data to disabled, the relevant target comparison data comparison operation will not take place. Comparison Setting Data Enable is disabled when Unit instruction execution starts and at restart. For target comparison, set Comparison Setting Data Enable to Enable.

● Advance Time Setting

With the advance time setting, target comparison can be output a set amount of time earlier than its timing. The setting range is 0 to 65536 μs.

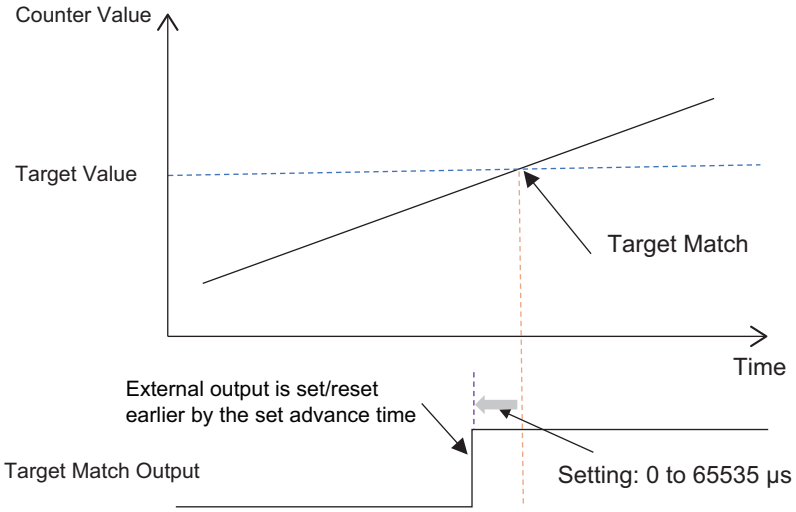

Advance time is realized by correcting the target value within the Unit as below. Target value correction is executed every 0.256 ms when advance time range setting is 0 to 10 and every 4.096 ms when it is 11 to 12.

Target value in addition matching = (target value as set) - (advance time set value) × (counter value per 1 μs)

Target value in subtraction matching = (target value as set) + (advance time set value) × (counter value per 1 μs)

The counter value per 1 μs is calculated with the moving average for the Advance Time Range Setting period.
When the counter speed is highly variable, set the Advance Time Range Setting higher to reduce the variation in the counter value per 1 μs.
However, the larger the advance time range setting, the greater the error upon sudden acceleration/deceleration.

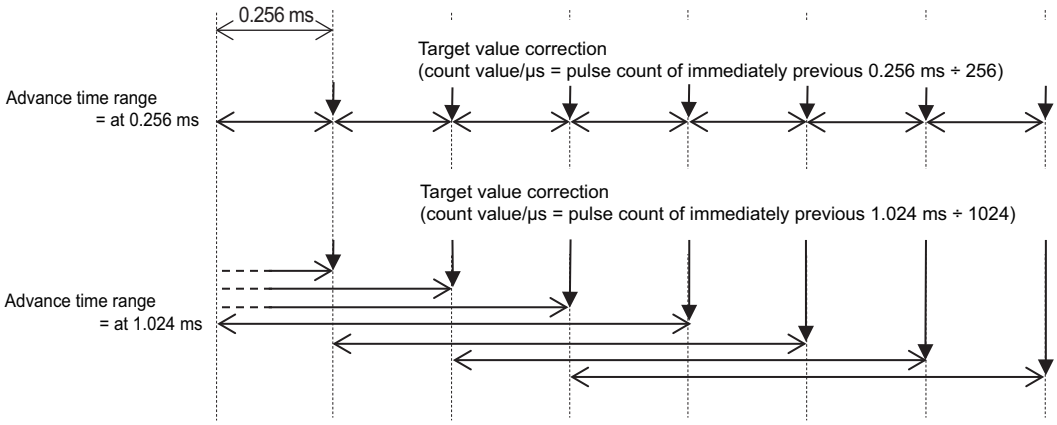

Advance Time Range Setting is as follows.

Setting name	Description	Default value	Setting range	Unit	Update timing
Advance Time Range Setting *1	Sets time range for estimation of counter values per 1 μs. 0: 0.256 ms 1: 0.512 ms 2: 1.024 ms 3: 2.048 ms 4: 4.096 ms 5: 8.192 ms 6: 16.384 ms 7: 32.768 ms 8: 65.536 ms 9: 131.072 ms 10: 524.288 ms 11: 2097.152 ms 12: 8388.608 ms	8	0 to 12	---	After the Unit is restarted

*1. The advance time error differs depending on the advance time range setting. Refer to *A-5 Advance Time Error* on page A-83 for details.

Within the advance time range, setting so that at least a 1-count pulse is invariably input is required. Therefore, the advance time range setting restricts the input frequency at comparison match timing. Check that the following points are fulfilled before setting the advance time range. If not fulfilled, advance time operation will not be correctly executed.

Advance Time Range Setting	Pulse frequency for which input is possible
0: 0.256 ms	3.91 kHz min.
1: 0.512 ms	1.96 kHz min.
2: 1.024 ms	977 Hz min.
3: 2.048 ms	489 Hz min.
4: 4.096 ms	245 Hz min.
5: 8.192 ms	123 Hz min.
6: 16.384 ms	61.1 Hz min.
7: 32.768 ms	30.6 Hz min.
8: 65.536 ms	15.3 Hz min.
9: 131.072 ms	7.63 Hz min.

Advance Time Range Setting	Pulse frequency for which input is possible
10: 524.288 ms	1.91 Hz min.
11: 2097.152 ms	0.477 Hz min.
12: 8388.608 ms	0.120 Hz min.

When the input frequency is less than 0.120 Hz at comparison match timing, set the advance time to 0.

Additional Information

- When counting at a fixed speed, advance time error will be the total of the following 2 errors.
  - Error due to counter resolution
  - Counter value calculation error per 1 μs

  Refer to *A-5 Advance Time Error* on page A-83 for details.
- When counter reset or counter preset is executed within the advance time range, the counter value per 1 μs is the value calculated immediately before the counter reset or preset.
- Do not switch count direction within the period from before the Advance Time Output Timing advance time range to the Target Value Match Timing. Target comparison may be detected at incorrect timing.

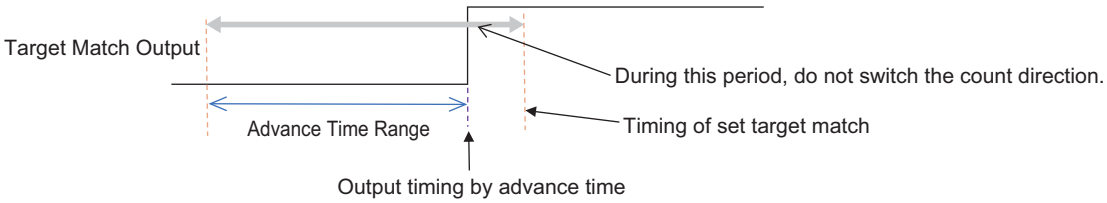

- Based on the actual speed, the advance time set value is corrected within the Unit. Do not change the order of matching by speed against other target comparison setting data. If the matching order changes, comparison operation will not be correctly executed. For example, at low speed, even if target value1 match is detected after target value0 match, at high speed, due to the advance time, target value0 match may be detected after target value1 match. Do not set Target Comparison Data in this way. At maximum speed as well, check that the target value corrected for advance time does not exceed the other target values.

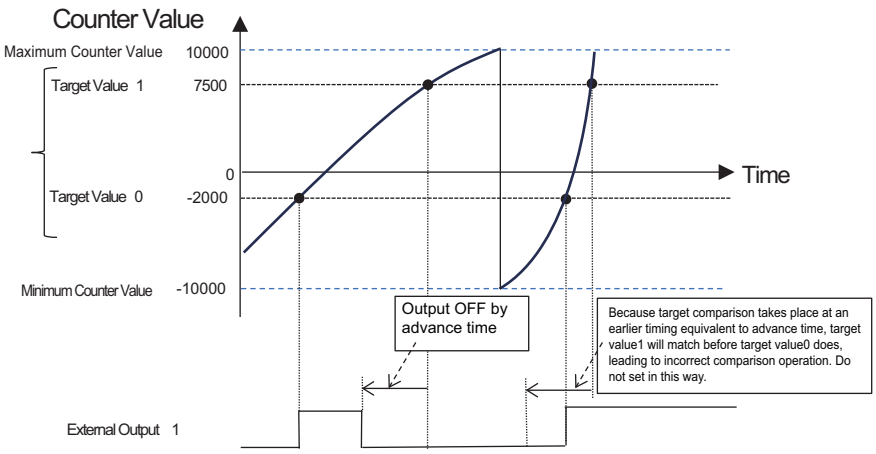

- Based on the actual speed, the advance time set value is corrected within the Unit, so depending on the speed, it may be closer to the match timing of other target values. Comparison operation stops for up to 1 ms from the counter value target value match. Therefore, depending on the speed, comparison of other target values may not take place. Set the Target Comparison Data with attention to the fluctuation of counter target values due to speed.

● Output Pattern Setting at Counter Reset/Preset

External output will not be set/reset even when the target value is exceeded during counter reset/preset.
When changing the external output status during counter reset/preset, the I/O data Target Comparison Ch□ Counter Reset/Preset Output Pattern can be set for each channel.

Data Name	Function	Data type	Default value	I/O Port Name
Ch1 Output Pattern at Ch1 Counter Reset/Preset of Target Comparison1*1	Aggregated Ch□ Output Pattern Counter Reset/Preset of Target Comparison data. Sets output pattern when Ch□ Counter Reset/Preset are complete in Target Comparison Mode.	WORD	0000 hex	Output Pattern at Ch1 Counter Reset/Preset of Target Comparison
Ch2 Output Pattern at Ch2 Counter Reset/Preset of Target Comparison1*1		WORD	0000 hex	Output Pattern at Ch2 Counter Reset/Preset of Target Comparison

*1. Refer to *Ch□ Counter Reset/Preset of Target Comparison Output Pattern* on page 6-31 for details of aggregated data.

When using Ch□ counter reset/preset of target comparison output pattern data, the items above are allocated as I/O data. Allocation is not necessary when not in use.
When external output is set to 0: Disable, the output will not change even upon counter reset/preset.
When external output is set to 1: Enable, the output will set or reset according to the setting when counter reset or counter preset takes place.

7-5-3 2ch mode Range Comparison

This section describes range comparison in 2ch mode.
It is usable only in 2ch mode. Refer to *7-5-4 6ch mode Range Comparison* on page 7-86 for details on range comparison in 6ch mode.

Overview and Applications

In Range Comparison Mode, this function sets the upper and lower limits of range comparison and turns external output ON when lower limit ≤ counter value ≤ upper limit.
Ch1 and Ch2 can handle 32 range comparison data items each.
Range comparison data is composed of upper limit, lower limit, and output pattern.

Range comparison data0 to 31 can be set to Enable/Disable with Comparison Setting Data Enable.
When performing comparison operation with the set range comparison data, be sure to set Comparison Setting Data Enable to Enabled.

Hysteresis setting is available with 2ch mode range comparison. For example, when the encoder stops at a certain position, there may be vibration near the stop position. This means that the counter value will fluctuate near a certain value. When setting range comparison conditions within the range

where the counter value fluctuates, in accordance with the counter value fluctuations, the corresponding range comparison conditions will repeatedly go from being met to being unmet and back. To prevent this kind of output ON/OFF switching due to small fluctuations, for range comparison in 2ch mode, the Hysteresis Function can be set for each channel.

In 2ch mode range comparison, External Output Inter-Channel Logical Setting can be used. When allocating Ch1 and Ch2 range comparison output to the same external output, the external output logic for Ch1 and Ch2 output can be selected from AND and OR.

Additional Information

External output can be turned ON/OFF within 0.5 ms or less from range comparison detection.

Details on the Function

For range comparison in 2ch mode, each counter can set up to 32 range comparison data items.
Range comparison data is composed of the following 3 data contents.

- Lower limit
  Sets lower limit for range comparison.
- Upper limit
  Sets upper limit for range comparison.
- Output pattern
  In 2ch mode, the counter value can set the external output which turns ON when in the band comparison range.

Range Comparison Mode can be applied to ring counter and linear counter.
For linear counter, the upper limit must be set to a higher value than the lower limit. For ring counter, the upper limit can be set to a lower value than the lower limit.

Below is a setting example of 2ch mode range comparison for linear counter.

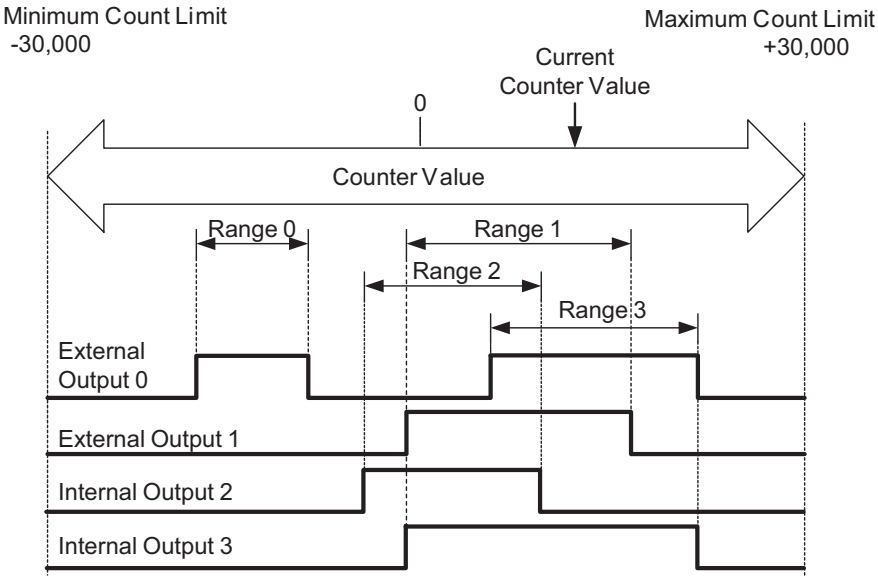

Range	Lower Range Limit	Upper Range Limit	Output ON
0	- 20,000	- 10,000	0
1	- 1,000	19,000	1, 3
2	- 5,000	11,000	2
3	6,000	25,000	0, 3

This example shows the setting of 4 range comparisons (4 sets of upper and lower limits). The setting data above has the following meaning.

- When the counter value is within the range comparison0 range, output0 turns ON.
- When the counter value is within the range comparison1 range, output1 and 3 turn ON.
- When the counter value is within the range comparison2 range, output 2 turns ON.
- When the counter value is within the range comparison3 range, output0 and 3 turn ON.

In the example above, when the counter value is within the range comparison1 and 3 ranges, output0, 1, and 3 turn ON.

Below is a setting example of 2ch mode range comparison for ring counter.

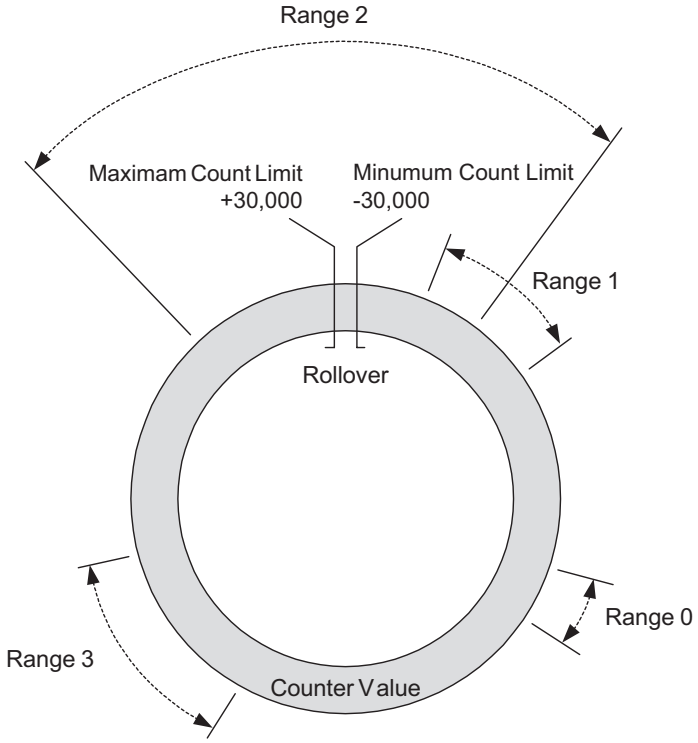

Range	Lower Range Limit	Upper Range Limit	Output ON
0	-10,000	-8,000	0
1	-25,000	-20,000	1, 3
2	22,000	-23,000	2
3	5,000	-12,000	0, 3

Additional Information

Make sure the period when the counter value is within the range comparison range is at least 0.5 ms. If the period is shorter than 0.5 ms, range comparison entry may not be detected.

Range Comparison Data Writing

Range comparison data writing is done with command formats using the following I/O data.

Data Name	Function	Data type	Default value	I/O Port Name
Comparison Setting Status*1	Aggregated comparison setting status data. Used when writing or reading target comparison data or range comparison data.	WORD	0000 hex	Comparison Setting Status
Comparison Setting Command*2	Aggregated comparison setting command data. Used when writing or reading target comparison data or range comparison data.	WORD	0000 hex	Comparison Setting Command
Comparison Setting Data Number	Sets comparison data number when writing or reading target comparison data or range comparison data. The setting range is from 0 to 31.	UINT	0	Comparison Setting Data Number
Lower Limit Value of Range Comparison Write Data	Lower limit value when writing range comparison data.	DINT	0	Lower Limit Value of Range Comparison Write Data
Upper Limit Value of Range Comparison Write Data	Upper limit value when writing range comparison data.	DINT	0	Upper Limit Value of Range Comparison Write Data
Output Pattern of Range Comparison Write Data*3	Aggregated output pattern data when writing range comparison data.	WORD	0000 hex	Output Pattern of Range Comparison Write Data

*1. Refer to *Comparison Setting Status* on page 6-16 for details of aggregated data.
*2. Refer to *Comparison Setting Commands* on page 6-27 for details of aggregated data.
*3. Refer to *Output Pattern of Range Comparison Write Data* on page 6-33 for details of aggregated data.

When writing, the items above are allocated as I/O data.

Store data as Lower Limit Value of Range Comparison Write Data, Upper Limit Value of Range Comparison Write Data, and Output Pattern of Range Comparison Write Data. Set the comparison setting data number to write and set Read/Write to 1: Write; then set the comparison setting command Ch□ Comparison Data Setting Request to 1. This makes it possible to set range comparison for the writing channel.

When writing is complete, the comparison setting status Comparison Data Setting Completed bit will change to 1. After confirming that Comparison Data Setting Completed is now 1, set Ch□ Comparison Data Setting Request to 0.

If any of the conditions below is met during writing, when the comparison setting status Comparison Data Setting Completed bit becomes 1, the Comparison Data Setting Error Flag will become 1 at the same time and the range comparison data will not be written.
The Comparison Data Setting Error Flag is cleared when Ch□ Comparison Data Setting Request is set to 0.

- Upper or lower limit set out of range.
- In Linear Mode, upper limit set below lower limit.
- Comparison Data Setting Request multiple bits set simultaneously to 1.
- Comparison Setting Data Number set out of range.

The target value set for range comparison data is deleted by power OFF or Unit restart. When power is turned ON or when restarting, set again.
However, range comparison data0 must be set to default values at power ON or restart as a parameter setting.
The default values for range comparison data0 are given in the following table.
If default values are set out of range, a Comparison Initial Data Setting Error event will occur. Refer to *8-3-3 Error Table* on page 8-6 for event details.

Setting name	Description	Default value	Setting range	Unit	Update timing
Ch□ Range Comparison Data0 Initial Lower Limit Value*1	Sets initial value for Ch□ Range Comparison Data0.	0	*2	---	After the Unit is restarted
Ch□ Range Comparison Data0 Initial Upper Limit Value*1		0	*2	---	
Ch□ Range Comparison Data0 Initial Output Pattern*1		0000 hex	0000 to FFFF	---	

*1. Ch□ represents the channel number. In this item, it is either Ch1 or Ch2.
*2. Set the Initial Lower Limit Value and Initial Upper Limit Value within the range of the Minimum Counter Value to the Maximum Counter Value. When out of range, comparison operation will not take place.

Additional Information

- Refer to *A-4-3 2ch Mode Writing/Reading Range Comparison Data* on page A-75 for the range comparison data writing program.
- Comparison operation will continue even during range comparison data writing.
- The time until the written comparison data becomes valid is up to 1 ms from Comparison Data Setting Completed = 1.

Reading Range Comparison Data

Range comparison data reading is done with command formats using the following I/O data.

Data Name	Function	Data type	Default value	I/O Port Name
Comparison Setting Status*1	Aggregated comparison setting status data. Used when writing or reading range comparison data or range comparison data.	WORD	0000 hex	Comparison Setting Status
Lower Limit Value of Range Comparison Read Data	Lower limit when range comparison data has been read is stored.	DINT	0	Lower Limit Value of Range Comparison Read Data
Upper Limit Value of Range Comparison Read Data	Upper limit when range comparison data has been read is stored.	DINT	0	Upper Limit Value of Range Comparison Read Data
Output Pattern of Range Comparison Read Data*2	Aggregated output pattern data when reading range comparison data.	WORD	0000 hex	Output Pattern of Range Comparison Read Data
Comparison Setting Command*3	Aggregated comparison setting command data. Used when writing or reading target comparison data or range comparison data.	WORD	0000 hex	Comparison Setting Command

Data Name	Function	Data type	Default value	I/O Port Name
Comparison Setting Data Number	Sets comparison data number when writing or reading target comparison data or range comparison data. The setting range is from 0 to 31.	UINT	0	Comparison Setting Data Number

*1. Refer to *Comparison Setting Status* on page 6-16 for details of aggregated data.
*2. Refer to *Output Pattern of Range Comparison Read Data* on page 6-21 for details of aggregated data.
*3. Refer to *Comparison Setting Commands* on page 6-27 for details of aggregated data.

For reading, the items above are allocated as I/O data.

After setting the comparison setting data number to be read to the Comparison Setting Data Number and using the Comparison Setting Command to set Read/Write to 0: Read, set the read channel Ch□ comparison data setting request to 1.
When reading is complete, the comparison setting status Comparison Data Setting Completed bit will change to 1. Read data is stored as Lower Limit Value of Range Comparison Read Data, Upper Limit Value of Range Comparison Read Data, and Output Pattern of Range Comparison Read Data. After confirming that Comparison Data Setting Completed is now 1, set Ch□ Comparison Data Setting Request to 0.

When one of the following conditions is met at reading and the Comparison Setting Status Comparison Data Setting Completed bit changes to 1, the Comparison Data Read Error Flag will change to 1 and the Lower Limit Value of Range Comparison Read Data, Upper Limit Value of Range Comparison Read Data, and Output Pattern of Range Comparison Read Data will all change to 0.
The Comparison Data Setting Error Flag is cleared when Ch□ Comparison Data Setting Request is set to 0.

- No valid data when reading settings. (not written)
- Comparison Data Setting Request multiple bits set simultaneously to 1.
- Comparison Setting Data Number set out of range.

Additional Information

Refer to *A-4-3 2ch Mode Writing/Reading Range Comparison Data* on page A-75 for the range comparison data reading program.

● Range Comparison Data Enable Setting

Range comparison data0 to 31 enable/disable can be set for each channel.
Range Comparison Data Enable/Disable setting is set for each channel with I/O data Comparison Setting Data Enable1 and Comparison Data Setting Data Enable2.

Data Name	Function	Data type	Default value	I/O Port Name
Ch1 Comparison Setting Data Enable1*1	Aggregated Comparison Setting Data Enable1 data. Range comparison data0 to 15 enable/disable can be set for each channel.	WORD	0000 hex	Ch1 Comparison Setting Data Enable1
Ch2 Comparison Setting Data Enable1*1		WORD	0000 hex	Ch2 Comparison Setting Data Enable1

Data Name	Function	Data type	Default value	I/O Port Name
Ch1 Comparison Setting Data Enable2*2	Aggregated Comparison Setting Data Enable2 data. Range comparison data16 to 31 enable/disable can be set for each channel.	WORD	0000 hex	Ch1 Comparison Setting Data Enable2
Ch2 Comparison Setting Data Enable2*2		WORD	0000 hex	Ch2 Comparison Setting Data Enable2

*1. Refer to *Ch□ Comparison Setting Data Enable1* on page 6-34 for details of aggregated data.
*2. Refer to *Ch□ Comparison Setting Data Enable2* on page 6-35 for details of aggregated data.

For range comparison, the items above are allocated as I/O data. Comparison Setting Data Enable1 is the setting for Range Comparison Data0 to 15; Comparison Setting Data Enable2 is the setting for Range Comparison Data16 to 31. When only using Range Comparison Data0 to 15, allocation of Comparison Setting Data Enable2 is not required. When not allocated as I/O data, it will be processed as disabled.

When setting range comparison data to disabled, the relevant range comparison data comparison operation will not take place. Comparison Setting Data Enable is disabled when Unit instruction execution starts and at restart. For range comparison, set Comparison Setting Data Enable to Enable.

● Hysteresis Setting

When the encoder stops at a certain position, there may be vibration near the stop position. This means that the counter value will fluctuate near a certain value. When setting range comparison conditions within the range where the counter value fluctuates, in accordance with the counter value fluctuations, the corresponding range comparison conditions will repeatedly go from being met to being unmet and back. To prevent this kind of output ON/OFF switching due to small fluctuations, for range comparison in 2ch mode, the Hysteresis Function can be set for each channel. Counter value fluctuation width treated as actual change can be set for each channel as hysteresis within a range of 1 to 255 counts. Output turns ON/OFF accordingly.

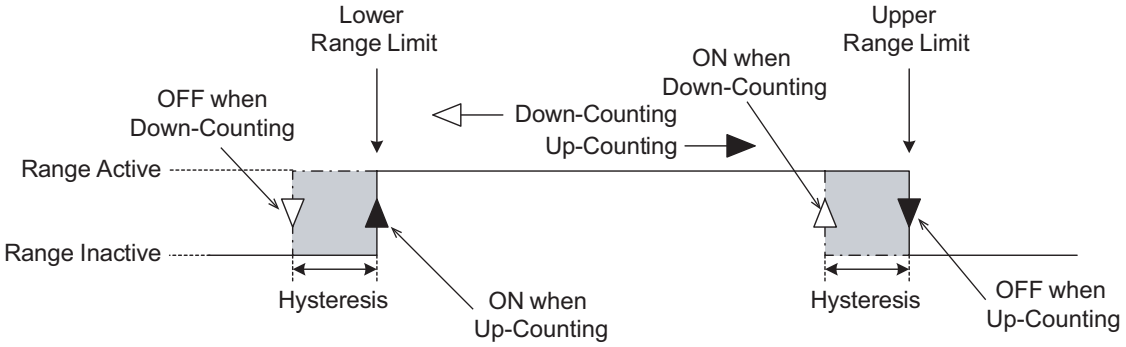

For addition: When lower limit ≤ count value ≤ upper limit, external output turns ON

For subtraction: When (lower limit - hysteresis value) ≤ count value ≤ (upper limit - hysteresis value), external output turns ON

The Ch□ hysteresis settings are as follows.

Setting name	Description	Default value	Setting range	Unit	Update timing
Ch□ Hysteresis Data for Range Comparison Mode*1	Sets hysteresis width. 0: No hysteresis. 1 to 255: Hysteresis width.	0	0 to 255	---	After the Unit is restarted

*1. Ch□ represents the channel number. In this item, it is either Ch1 or Ch2.

Additional Information

- Do not use settings including counter value 0 within the hysteresis range.
- To use the preset function, set 0: No hysteresis. When preset within the hysteresis range, range comparison may not be correctly executed.
- Do not set so that (upper limit - hysteresis) is below the lower limit. Range comparison may not be correctly executed.

External Output Inter-Channel Logical Setting

When output by Ch1 and Ch2 counter range comparison is allocated to the same external output, select from the following 2 operations.

- OR setting
  When output by range comparison is ON in either channel, the relevant external output will turn ON. Also, when output by range comparison is OFF in both channels, the relevant external output will turn OFF.
- AND setting
  When output by range comparison is ON in both channels, the relevant external output will turn ON. Also, when output by range comparison is OFF in either channel, the relevant external output will turn OFF.

External Output Inter-Channel Logical Setting is as follows.

Setting name	Description	Default value	Setting range	Unit	Update timing
External Output0 Inter-Channel Logical Setting for Range Comparison Mode	Sets operation when output by Ch1 and Ch2 counter range comparison is allocated to the same external output. 0: OR setting. 1: AND setting.	0	0/1	---	After the Unit is restarted
External Output1 Inter-Channel Logical Setting for Range Comparison Mode					
External Output2 Inter-Channel Logical Setting for Range Comparison Mode					
External Output3 Inter-Channel Logical Setting for Range Comparison Mode					
External Output4 Inter-Channel Logical Setting for Range Comparison Mode					
External Output5 Inter-Channel Logical Setting for Range Comparison Mode					

External Output Inter-Channel Logical Setting is disabled when the Ch1 and Ch2 counter output patterns are not allocated to the same external output. In this case, even when AND setting is selected, if output by range comparison in each channel turns ON, the relevant external output will turn ON.

Ex. When the following settings are made for an XY stage, the ON range is as follows for the OR and AND settings.

Counter	Range comparison data		
	Lower limit	Upper limit	Output pattern
Ch1	300	700	External output0 enabled
Ch2	400	900	External output0 enabled

For OR setting

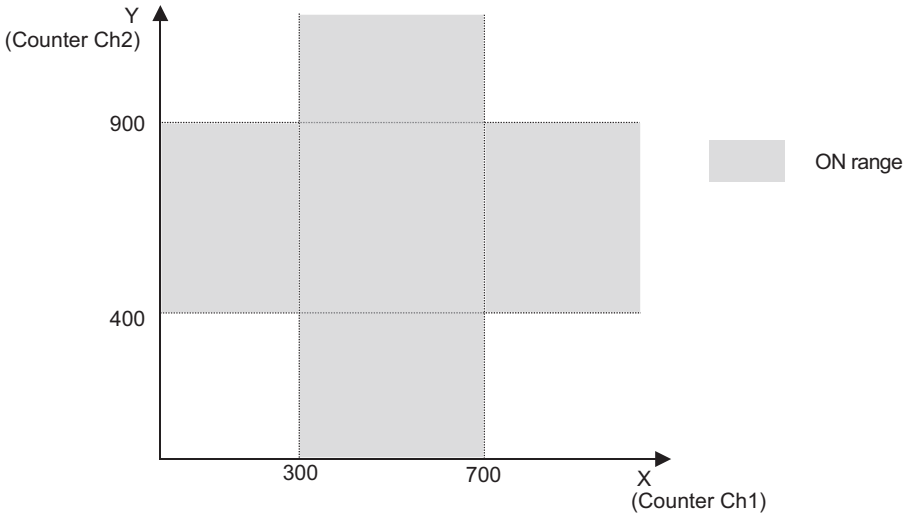

For AND setting

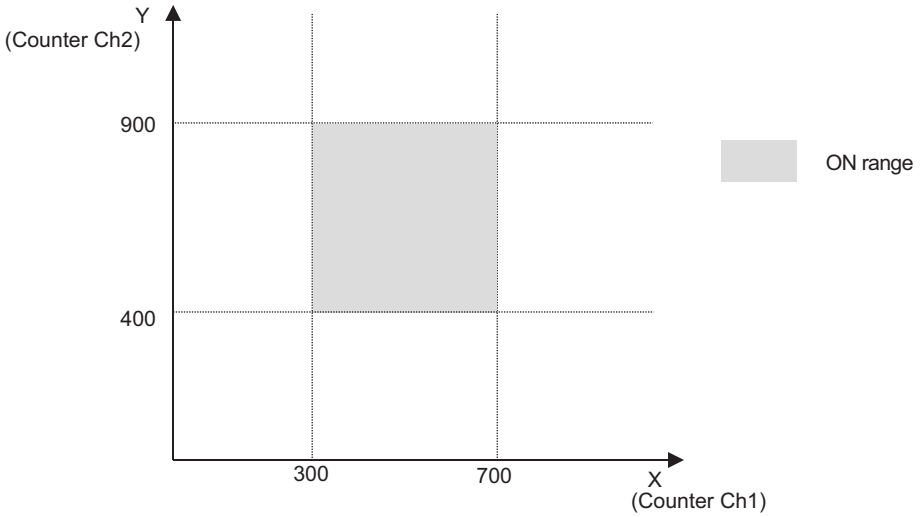

7-5-4 6ch mode Range Comparison

This section describes range comparison in 6ch mode.
It is usable only in 6ch mode. Refer to *7-5-3 2ch mode Range Comparison* on page 7-75 for details on range comparison in 2ch mode.

Overview and Applications

In Range Comparison Mode, this function sets the upper and lower limits of range comparison and turns external output ON when lower limit ≤ counter value ≤ upper limit. External output can be operated within 0.5 ms of the count value entering the range.
Ch1 to 6 can handle 1 Range Comparison Data item each.
Range comparison data is composed of upper and lower limit data.
The external output is fixed for each counter.

Range Comparison Data can be set to Enable/Disable with Comparison Setting Data Enable 6ch mode.
When performing comparison operation with the set Range Comparison Data, be sure to set Comparison Setting Data Enable 6ch mode to Enabled.

Details on the Function

For range comparison in 6ch mode, each counter can set 1 range comparison data item.
Range comparison data is composed of the following 2 data contents.

- Lower limit
  Sets lower limit for range comparison.
- Upper limit
  Sets upper limit for range comparison.

When lower limit ≤ counter value ≤ upper limit, the corresponding external output turns ON.
The external output is fixed for each counter. Ch1 outputs external output0, Ch2 external output1, Ch3 external output2, Ch4 external output3, Ch5 external output4, and Ch6 external output5.

Range Comparison Mode can be applied to ring counter and linear counter.
For linear counter, the upper limit must be set to a higher value than the lower limit. For ring counter, the upper limit can be set to a lower value than the lower limit.

Additional Information

Make sure the period when the counter value is within the range comparison range is at least 0.5 ms. If the period is shorter than 0.5 ms, range comparison entry may not be detected.

● Range Comparison Data Writing

Range comparison data writing is done with command formats using the following I/O data.

Data Name	Function	Data type	Default value	I/O Port Name
Comparison Setting Status*1	Aggregated comparison setting status data. Used when writing or reading target comparison data or range comparison data.	WORD	0000 hex	Comparison Setting Status
Comparison Setting Command*2	Aggregated comparison setting command data. Used when writing or reading target comparison data or range comparison data.	WORD	0000 hex	Comparison Setting Command
Lower Limit Value of Range Comparison Write Data	Lower limit value when writing range comparison data.	DINT	0	Lower Limit Value of Range Comparison Write Data
Upper Limit Value of Range Comparison Write Data	Upper limit value when writing range comparison data.	DINT	0	Upper Limit Value of Range Comparison Write Data

*1. Refer to *Comparison Setting Status* on page 6-16 for details of aggregated data.
*2. Refer to *Comparison Setting Commands* on page 6-27 for details of aggregated data.

When writing, the items above are allocated as I/O data.

Store data as Lower Limit Value of Range Comparison Write Data and Upper Limit Value of Range Comparison Write Data. Set “Read/Write” to “1: Write”; then set the comparison setting command “Ch□ Comparison Data Setting Request” to “1”. This makes it possible to set range comparison for the writing channel.

When writing is complete, the comparison setting status Comparison Data Setting Completed bit will change to 1. After confirming that Comparison Data Setting Completed is now 1, set Ch□ Comparison Data Setting Request to 0.

If any of the conditions below is met during writing, when the comparison setting status Comparison Data Setting Completed bit becomes 1, the Comparison Data Setting Error Flag will become 1 at the same time and the range comparison data will not be written.
The Comparison Data Setting Error Flag is cleared when Ch□ Comparison Data Setting Request is set to 0.

- Upper or lower limit set out of range.
- In Linear Mode, upper limit set below lower limit.
- Comparison Data Setting Request multiple bits set simultaneously to 1.

Range comparison data must be set to default values at power ON or restart as a parameter setting.
The default values for Ch□ Range Comparison Data are given in the following table.
If default values are set out of range, a Comparison Initial Data Setting Error event will occur. Refer to *8-3-3 Error Table* on page 8-6 for event details.

Setting name	Description	Default value	Setting range	Unit	Update timing
Ch□ Range Comparison Data0 Initial Lower Limit Value*1	Sets initial value for Ch□ Range Comparison Data0.	0	*2	---	After the Unit is restarted
Ch□ Range Comparison Data0 Initial Upper Limit Value*1		0	*2	---	

*1. Ch□ represents the channel number. In this item, it is one of Ch1 to 6.
*2. Set the Initial Lower Limit Value and Initial Upper Limit Value within the range of the Minimum Counter Value to the Maximum Counter Value. When set out of range, comparison operation will not take place.

Additional Information

- Comparison operation will continue even during range comparison data writing.
- The time until the written comparison data becomes valid is up to 1 ms from Comparison Data Setting Completed = 1.

Reading Range Comparison Data

Range comparison data reading is done with command formats using the following I/O data.

Data Name	Function	Data type	Default value	I/O Port Name
Comparison Setting Status*1	Aggregated comparison setting status data. Used when writing or reading target comparison data or range comparison data.	WORD	0000 hex	Comparison Setting Status
Lower Limit Value of Range Comparison Read Data	Lower limit when range comparison data has been read is stored.	DINT	0	Lower Limit Value of Range Comparison Read Data
Upper Limit Value of Range Comparison Read Data	Upper limit when range comparison data has been read is stored.	DINT	0	Upper Limit Value of Range Comparison Read Data
Comparison Setting Command*2	Aggregated comparison setting command data. Used when writing or reading target comparison data or range comparison data.	WORD	0000 hex	Comparison Setting Command

*1. Refer to *Comparison Setting Status* on page 6-16 for details of aggregated data.
*2. Refer to *Comparison Setting Commands* on page 6-27 for details of aggregated data.

For reading, the items above are allocated as I/O data.

After using the Comparison Setting Command to set Read/Write to 0: Read, set the read channel Ch□ comparison data setting request to 1.
When reading is complete, the comparison setting status Comparison Data Setting Completed bit will change to 1. Read data is stored as Lower Limit Value of Range Comparison Read Data and Upper Limit Value of Range Comparison Read Data. After confirming that Comparison Data Setting Completed is now 1, set Ch□ Comparison Data Setting Request to 0.

When one of the following conditions is met at reading and the Comparison Setting Status Comparison Data Setting Completed bit changes to 1, the Comparison Data Read Error Flag will change to 1 and the Lower Limit Value of Range Comparison Read Data and Upper Limit Value of Range Comparison Read Data will change to 0.

The Comparison Data Setting Error Flag is cleared when Ch□ Comparison Data Setting Request is set to 0.

- No valid data when reading settings. (not written)
- Comparison Data Setting Request multiple bits set simultaneously to 1.

● Comparison Data Enable Setting

Range comparison data enable/disable can be set for each channel.
Range Comparison Data Enable/Disable setting is set for each channel with I/O data Comparison Setting Data Enable 6ch mode.

Data Name	Function	Data type	Default value	I/O Port Name
Comparison Setting Data Enable 6ch Mode*1	Aggregated Comparison Setting Data Enable data in 6ch mode. Range comparison data enable/disable can be set for each channel.	WORD	0000 hex	Ch1 Comparison Setting Data Enable1

*1. Refer to *Comparison Setting Data Enable: 6ch Mode* on page 6-36 for details of aggregated data.

For range comparison, the items above are allocated as I/O data.

When setting range comparison data to disabled, the relevant range comparison data comparison operation will not take place. Comparison Setting Data Enable is disabled when Unit instruction execution starts and at restart. For range comparison, set Comparison Setting Data Enable to Enable.

7-6 External Output Function

This section describes the External Output Function.

7-6-1 Output Delay Function

This section describes the Output Delay Function.

Overview and Applications

The Output Delay Function operates only in 2ch mode.
The ON-delay time and ON duration time can be set for external output0 to 1 by target comparison and range comparison.
External output2 to 5 have no output delay function.

Details on the Function

The Output Delay Function settings are shown in the following table.

Setting name	Description	Default value	Setting range	Unit	Update timing
External Output0 Pulse ON-Delay Time	Sets the external output0 to 1 ON-delay time with Target Comparison and Range Comparison. When set to 0, the output ON-delay function is disabled.	0	0 to 50	ms	After the Unit is restarted
External Output1 Pulse ON-Delay Time					
External Output0 Pulse Duration Time	Sets the external output0 to 1 ON duration with Target Comparison and Range Comparison. When set to 0, the output ON duration function is disabled.	0	0 to 50	ms	
External Output1 Pulse Duration Time					

ON-delay and ON duration operate as below.

- ON-delay
  External output turns ON when the output ON-delay time has passed after the ON command in the comparison function output pattern.
- Output ON duration
  External output turns ON immediately after the ON command in the comparison function output pattern, and after that remains ON only for the set time. When the set time has passed, external output turns OFF.

Output ON-delay and output ON duration can be set at the same time.

External output with output ON-delay or output ON duration set will turn OFF immediately after the relevant external output Unit output pattern turns OFF. Executing output ON-delay or output ON duration will be immediately canceled. At this time, external output will turn OFF or retain OFF status.

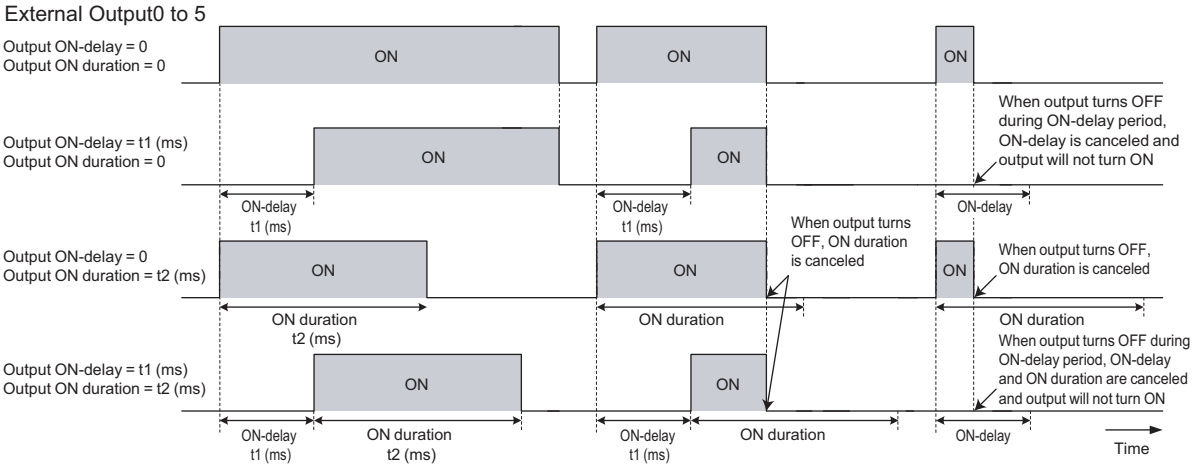

Additional Information

- When selecting PWM output for external output0, the Output Delay Function will not operate.
- For target comparison, after using output ON duration to turn external output OFF, because ON duration continues even when setting takes place while the Unit internal status is ON, external output will not turn ON. To turn it ON thereafter, reset with target comparison and turn the Unit internal status OFF.

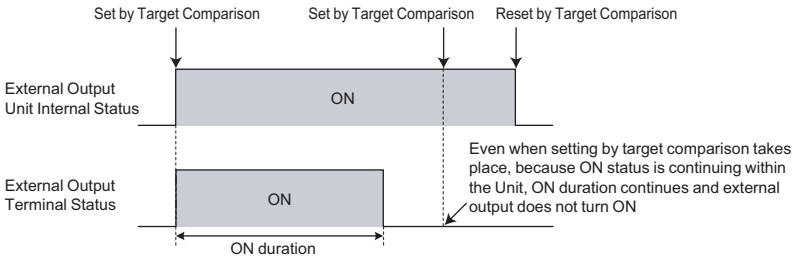

- For range comparison, after using output ON duration to turn external output OFF, because ON duration continues even when turned ON by a different range comparison while the Unit internal status is ON, external output will not turn ON. To turn it ON thereafter, turn the Unit internal status OFF.

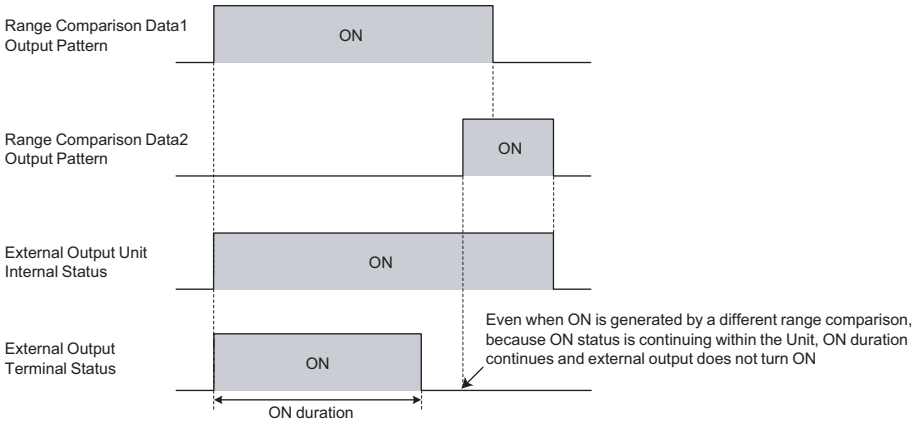

Setting Method

This section gives the setting method for Sysmac Studio.

1 Display the Edit Unit Operation Settings Tab Page.
Refer to *A-8 Displaying the Edit Unit Operation Settings Tab Page* on page A-90 for the display methods.

2 Enter the set values in the **External Output□ Pulse ON-Delay Time** and **External Output□ Pulse Duration Time** text boxes.
Refer to *A-9 Edit Unit Operation Settings Tab Page* on page A-93 for how to edit unit operation settings.

3 Click the **Transfer to Unit** Button.
The settings are transferred from the Sysmac Studio to the NX Unit.
The settings are reflected after the Unit is restarted.

7-6-2 PWM Output Function

This section describes the PWM (pulse width modulation) Output Function.

Overview and Applications

PWM output can be started/stopped/changed by target comparison or PWM operation commands.
The PWM Output Function can only be used in 2ch mode and when the comparison function is in Target Comparison Mode.
The pulse according to the set frequency and duty will be output from external output0.
External output1 to 5 do not support PWM output.
Use is possible for lighting dimming control, laser output control, fan speed control and so on.

Details on the Function

The External Output0 Function enables setting of the selection of target comparison output or PWM output.
When PWM output is selected, I/O data is used to set PWM frequency and PWM duty. At this point, setting is only saved in the High-speed Counter Unit internal register and is not reflected in output.
Settings in the internal register are reflected in output by setting target comparison or PWM operation commands. Also, PWM output can be stopped by resetting the target comparison or PWM operation command settings.

● PWM Output Function Selection

When using external output0 as PWM output, select 1: PWM Output with the following settings.

Setting name	Description	Default value	Setting range	Unit	Update timing
External Output0 Function Setting	Select from external output0 functions. 0: Target comparison output. 1: PWM output.	0	0/1	---	After the Unit is restarted

● PWM Frequency and PWM Duty Setting

PWM frequency and PWM duty setting are set using the setting items below and I/O data. Setting is only saved in the High-speed Counter Unit internal register and is not reflected in output.

Setting

Setting name	Description	Default value	Setting range	Unit	Update timing
External Output0 PWM Unit Setting	Sets frequency unit. 0: Frequency unit 0.1 Hz. 1: Frequency unit 1 Hz.	0	0/1	---	After the Unit is re-started

I/O data

Data Name	Function	Data type	Default value	I/O Port Name
External Output0 PWM Operation Command*1	Aggregated external output0 PWM operation command data.	WORD	0000 hex	External Output0 PWM Operation Command
External Output0 PWM Frequency Setting	Sets PWM frequency for external output0.*2	UINT	0	External Output0 PWM Frequency Setting
External Output0 PWM Duty Setting	Sets PWM duty for external output. The setting range is from 0 to 1000. Setting with 0.1% units is possible; for 0 it is 0.0% and for 1000 it is 100.0%.	UINT	0	External Output0 PWM Duty Setting

*1. Refer to *External Output0 PWM Operation Command* on page 6-37 for details of aggregated data.

*2. The unit and setting range differ depending on the PWM Unit Setting.

- When PWM Unit Setting = 0
  The setting unit is 0.1 Hz and the setting range is from 1 to 65535. For 1 it is 0.1 Hz and for 65535 it is 6553.5 Hz. When set to 0, it operates at 0.1 Hz.
- When PWM Unit Setting = 1
  The setting unit is 1 Hz and the setting range is from 1 to 32800. For 1 it is 1 Hz and for 32800 it is 32800 Hz. When set to 0, it operates at 1 Hz. When set to a value larger than 32800, it operates at 32800 Hz.

For PWM output, the items above are allocated as I/O data.

Data is stored in External Output0 PWM Frequency Setting and External Output0 PWM Duty Setting. When PWM Operation Command PWM Output Internal Setting Write Execution is set to 1, data is written to the Unit's internal register.
When writing is complete, the PWM Status PWM Output Internal Setting Write Execution Completed bit will change to 1.
After confirming that PWM Output Internal Setting Write Execution Completed is 1, set PWM Operation Command PWM Output Internal Setting Write Execution to 0.

● Settings Reflection and PWM Output Stop

PWM Output Frequency Setting and PWM Output Duty Setting are stored in the internal register when written.

After that, PWM output is started by target comparison setting or PWM Operation Command External Output0 PWM Start setting, and PWM is output in accordance with the data set in the internal register.

When changing PWM output frequency or duty, store the next PWM Output Frequency Setting and PWM Output Duty Setting in the internal register and set either target comparison or by PWM Operation Command External Output0 PWM Start. This way, the set data will be reflected in the output from the next pulse on.

When stopping PWM output, reset target comparison or reset by PWM Operation Command External Output0 PWM Stop to stop PWM output from the next pulse on.

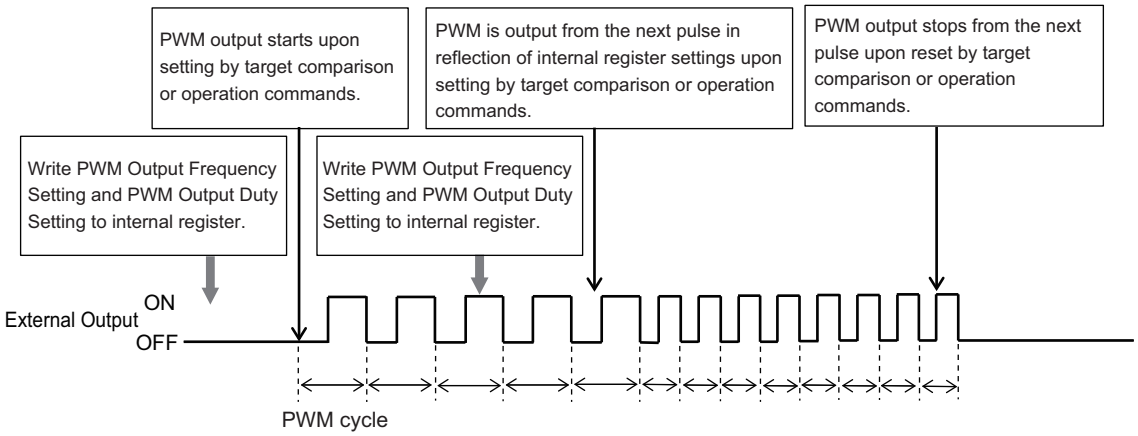

7-6-3 External Output Force ON/OFF Function

This section describes the External Output Force ON/OFF Function.

Overview and Applications

External output0 to 5 can be set to force ON/OFF output. When force ON/OFF is enabled with the I/O data Force ON/OFF Operation Command, comparison function and PWM output will be disabled.
The use of force ON/OFF output enables external output to be used as general-purpose digital output.
Force OFF output can also be used when an error is generated.

Details on the Function

The External Output Force ON/OFF Function uses the following I/O data.

Data Name	Function	Data type	Default value	I/O Port Name
External Output Force ON/OFF Command*1	Aggregated external output force ON/OFF command data.	WORD	0000 hex	External Output Force ON/OFF Command

*1. Refer to *External Output Force ON/OFF Operation Command* on page 6-25 for details of aggregated data.

This I/O data is allocated by default.
When external output force ON/OFF Operation Command External Output0 to 5 Force ON/OFF Enable is set to 1, the set external output will become force ON/OFF output.
When set to force ON/OFF output, ON will be output when external output force ON/OFF Operation Command External Output0 to 5 force ON/OFF setting is 1, and OFF when it is 0.

7-6-4 External Output Status

This section describes the external output status.

Overview and Applications

External output0 to 5 ON/OFF status can be confirmed with External Output Status.
External output operating status can also be confirmed with comparison output.

Details on the Function

External output ON/OFF status can be read with I/O data External Output Status.

Data Name	Function	Data type	Default value	I/O Port Name
External Output Status*1	Aggregated external output status data.	WORD	0000 hex	External Output Status

*1. Refer to *External Output Status* on page 6-23 for details of aggregated data.

7-6-5 Load Rejection External Output Setting

This section describes load rejection external output setting.

Overview and Applications

This function maintains a safe output status by performing the operation set with external output when the High-speed Counter Unit cannot receive output data from a remote device due to the following causes:

- When the Unit is connected to a CPU Unit: NX bus error, CPU Unit watchdog timer error, etc.
- When the Unit is connected to a Communications Coupler Unit: Host error on the Communications Coupler Unit, NX bus error, etc.

Details on the Function

Sets whether to hold the output or turn it OFF when an error has occurred.
Each external output bit can be set independently.

Setting name	Description	Default value	Setting range	Unit	Update timing
External Output0 Load Rejection Output Setting	Set the output at load OFF. 0: OFF 1: Holds the present value.*1	0	0/1	---	After the Unit is restarted
External Output1 Load Rejection Output Setting					
External Output2 Load Rejection Output Setting					
External Output3 Load Rejection Output Setting					
External Output4 Load Rejection Output Setting					
External Output5 Load Rejection Output Setting					

*1. When external output0 is set to PWM output, PWM output will continue when an error occurs if set to 1.

Setting Method

This section gives the setting method for Sysmac Studio.

1 Display the Edit Unit Operation Settings Tab Page.
Refer to *A-8 Displaying the Edit Unit Operation Settings Tab Page* on page A-90 for the display methods.

2 Select the item to be set from the **Load Rejection External Output Setting** list.
Refer to *A-9 Edit Unit Operation Settings Tab Page* on page A-93 for how to edit unit operation settings.

3 Click the **Transfer to Unit** Button.
The settings are transferred from the Sysmac Studio to the NX Unit.
The settings are reflected after the Unit is restarted.

8

Troubleshooting

This section describes the error information and corrections for errors that can occur when the High-speed Counter Units are used.

8-1 How to Check for Errors 8-2

8-2 Checking for Errors with the Indicators 8-3

8-3 Checking for Errors and Troubleshooting on the Support Software 8-5

8-3-1 Checking for Errors from the Sysmac Studio 8-5

8-3-2 Checking for Errors from Support Software Other Than the Sysmac Studio 8-6

8-3-3 Error Table 8-6

8-3-4 Meaning of Error 8-11

8-4 Resetting Errors 8-24

8-5 Unit-specific Troubleshooting 8-25

8-6 Troubleshooting Flowchart 8-28

8-1 How to Check for Errors

Use one of the following error checking methods.

- Checking the indicators
- Troubleshooting with the Support Software

Refer to the troubleshooting manual for the CPU Unit or the user's manual for the Communications Coupler Unit that the NX Units are connected to for details on troubleshooting with the Support Software.

8-2 Checking for Errors with the Indicators

You can use the TS indicators on the High-speed Counter Units to check the NX Unit status and level of errors.
This section describes the meanings of errors that the TS indicator shows and the troubleshooting procedures for them.

In this section, the status of the indicator is indicated with the following abbreviations.

Abbreviation	Indicator status
Lit	Lit
Not Lit	Not lit
FS ( )	Flashing. The numeric value in parentheses is the flashing interval.
---	Undefined

Main Errors and Corrections

The main errors and corrections for the High-speed Counter Units are given in the following table.

TS LED*1		Cause	Correction
Green	Red		
Lit	Not Lit	---	--- (This is the normal status.)
FS (2 s)	Not Lit	• Initializing • Downloading	--- (Normal. Wait until the processing is completed.)
Lit	Lit	This status is not present.	
Not Lit	Not Lit	The Unit power supply is not supplied.	Check the following items and supply the Unit power supply correctly. [Check Items for Power Supply] • Make sure that the power supply cable is wired correctly. • Make sure that the power supply cable is not disconnected. • Make sure that the power supply voltage is within the specified range. • Make sure that the power supply has enough capacity. • Make sure that power supply has not failed.
		• Waiting for initialization start • Restarting	--- (Normal. Wait until the processing is completed.)
		If you cannot resolve the problem after you check the above items and cycle the Unit power supply, the Unit may have a hardware failure. If this happens, replace the Unit.	
Not Lit	Lit	Hardware failure	If this error occurs after you cycle the Unit power supply, replace the Unit.
Not Lit	Lit	Non-volatile Memory Hardware Error	Refer to Event *Non-volatile Memory Hardware Error* on page 8-12.
Not Lit	Lit	Control Parameter Error in Master	Refer to Event *Control Parameter Error in Master* on page 8-13.

TS LED*1		Cause	Correction
Green	Red		
Not Lit	Lit	NX Unit Processing Error	Refer to Event *NX Unit Processing Error* on page 8-17.
Not Lit	Lit	NX Unit Clock Not Synchronized Error	Refer to Event *NX Unit Clock Not Synchronized Error* on page 8-21.
Not Lit	FS (1s)	NX Unit I/O Communications Error	Refer to Event *NX Unit I/O Communications Error* on page 8-18.
Not Lit	FS (1s)	NX Unit Output Synchronization Error	Refer to Event *NX Unit Output Synchronization Error* on page 8-20.
---	---	NX Message Communications Error	Refer to Event *NX Message Communications Error* on page 8-22.

*1. In case of an indicator status that is not listed in the above table, a hardware failure may have occurred in the Unit. If the problem persists even after the power supply to the Unit is cycled, replace the Unit.

8-3 Checking for Errors and Troubleshooting on the Support Software

Error management on the NX Series is based on the methods used for the NJ/NX/NY-series Controllers.
This allows you to use the Support Software to check the meanings of errors and troubleshooting procedures.
The confirmation method depends on the Support Software that is used.

8-3-1 Checking for Errors from the Sysmac Studio

When an error occurs, you can place the Sysmac Studio online to the Controller or the Communications Coupler Unit to check current Controller errors and the log of past Controller errors.
Refer to the user's manual for the connected CPU Unit or Communications Coupler Unit for details on how to check errors.

Current Errors

Open the Sysmac Studio's Controller Error Tab Page to check the current error's level, source, source details, event name, event codes, details, attached information 1 to 4, and correction.
Errors in the observation level are not displayed.

Additional Information

Number of Current Errors
The following table gives the number of errors that are reported simultaneously as current errors in the High-speed Counter Units.

Unit	Number of simultaneous error notifications
High-speed Counter Unit	15 errors

If the number of errors exceeds the maximum number of reportable current errors, errors are reported with a priority given to the oldest and highest-level errors. Errors that exceed the limit on simultaneous error notifications are not reported.
Errors that are not reported are still reflected in the error status.

Log of Past Errors

Open the Sysmac Studio's Controller Event Log Tab Page to check the times, levels, sources, source details, event names, event codes, details, attached information 1 to 4, and corrections for previous errors.

Additional Information

Number of Logs of Past Errors
Event logs in the High-speed Counter Units are stored in the High-speed Counter Units itself.
The system event log can record 15 events. The access event log can record 2 events.

Refer to the troubleshooting manual for the connected CPU Unit or Industrial PC and the *Sysmac Studio Version 1 Operation Manual (Cat. No. W504)* for information on the items you can check and for how to check for errors.
Refer to *8-3-3 Error Table* on page 8-6 for information on event codes.

8-3-2 Checking for Errors from Support Software Other Than the Sysmac Studio

You can check the error descriptions and logs with Support Software other than the Sysmac Studio. For the error checking methods, refer to the user's manual for the connected Communications Coupler Unit and the operation manual for the Support Software.
Refer to *8-3-3 Error Table* on page 8-6 for details on event codes.

The number of current errors and the number of error log errors that occurred in the past in the High-speed Counter Units are the same as for the Sysmac Studio.

8-3-3 Error Table

The errors (i.e.,events) that can occur in the High-speed Counter Units are given below.
The following abbreviations are used in the event level column.

Abbreviation	Name
Maj	Major fault level
Prt	Partial fault level
Min	Minor fault level
Obs	Observation
Info	Information

Symbol	Meaning
○	Event levels that are defined by the system.
⊙	Event levels that can be changed by the user.

Note ⊙ appears only for events for which the user can change the event level.

Refer to the troubleshooting manual for the connected CPU Unit or Industrial PC for all NJ/NX/NY-series event codes.

Event code	Event name	Meaning	Assumed cause	Level					Reference
				Maj	Prt	Min	Obs	Info	
00200000 hex	Non-volatile Memory Hardware Error	An error occurred in non-volatile memory.	• Non-volatile memory failure			○			page 8-12
10410000 hex	Control Parameter Error in Master	An error occurred in the control parameters that are saved in the master.	For the NX bus of CPU Units • The power supply to the CPU Unit was turned OFF while writing the Unit operation settings was in progress. Or there is an error in the area of the non-volatile memory in the CPU Unit in which the Unit operation settings for the relevant NX Unit are saved. For Communications Coupler Units • The power supply to the Communications Coupler Unit was turned OFF while writing the Unit operation settings was in progress. Or there is an error in the area of the non-volatile memory in the Communications Coupler Unit in which the Unit operation settings for the relevant NX Unit are saved.			○			page 8-13
39200000 hex	Counter Log Data I/O Allocation Setting Error	The I/O allocation setting of Ch1 Counter Log Data is incorrect.	The I/O allocation setting of Ch1 Counter Log Data is incorrect. Not allocated in numerical order from Ch1 Counter Log Data1. Example: Ch1 Counter Log Data1 and Ch1 Counter Log Data3 are allocated, but Ch1 Counter Log Data2 is not.			○			page 8-14

Event code	Event name	Meaning	Assumed cause	Level					Reference
				Maj	Prt	Min	Obs	Info	
39210000 hex	Comparison Initial Data Setting Error	Comparison initial data setting is out of range.	Comparison initial data setting is out of range. For Target Comparison • Target Comparison Data Target Value Default Value is outside the range of minimum to maximum counter values. For Range Comparison • Range Comparison Data Lower Limit Default Value and Range Comparison Data Upper Limit Default Value are outside the range of minimum to maximum counter values. • In linear mode, the lower limit is set larger than the upper limit.			○			page 8-15
40200000 hex	NX Unit Processing Error	A fatal error occurred in an NX Unit.	• An error occurred in the software.			○			page 8-17

Event code	Event name	Meaning	Assumed cause	Level					Reference
				Maj	Prt	Min	Obs	Info	
80200000 hex	NX Unit I/O Communications Error	An I/O communications error occurred in an NX Unit.	For the NX bus of CPU Units • An error that prevents normal NX bus communications occurred in a CPU Unit. • An NX Unit is not mounted properly. • The power cable for the Unit power supply is disconnected. Or, the wiring from the Unit power supply to the NX Units is incorrect. • The power cable for the Unit power supply is broken. • The voltage of the Unit power supply is outside the specified range, or the capacity of the Unit power supply is insufficient. • There is a hardware error in an NX Unit. For Communications Coupler Units • An error that prevents normal NX bus communications occurred in a Communications Coupler Unit. • The NX Unit is not mounted properly. • The power cable for the Unit power supply is disconnected. Or, the wiring from the Unit power supply to the NX Units is incorrect. • The power cable for the Unit power supply is broken. • The voltage of the Unit power supply is outside the specified range. Or, the capacity of the Unit power supply is insufficient. • There is a hardware error in the NX Unit.			○			page 8-18

Event code	Event name	Meaning	Assumed cause	Level					Reference
				Maj	Prt	Min	Obs	Info	
80210000 hex	NX Unit Output Synchronization Error	An output synchronization error occurred in the NX Unit.	For the NX bus of CPU Units • I/O refreshing on the NX bus is not performed normally due to an error in the CPU Unit. For Communications Coupler Units • The communications cable connected to the Communications Coupler Unit is broken or the connection is faulty. • The communications cable is affected by noise.			○			page 8-20
80240000 hex	NX Unit Clock Not Synchronized Error	A time information error occurred in an NX Unit.	For the NX bus of CPU Units • There is a hardware error in an NX Unit. • There is a hardware error in a CPU Unit. For Communications Coupler Units • There is a hardware error in an NX Unit. • There is a hardware error in an EtherCAT Coupler Unit.			○			page 8-21
80220000 hex	NX Message Communications Error	An error was detected in message communications and the message frame was discarded.	For the NX bus of CPU Units • The message communications load is high. For Communications Coupler Units • The message communications load is high. • The communications cable is disconnected or broken. • Message communications were cutoff in communications.				○		page 8-22
90400000 hex	Event Log Cleared	The event log was cleared.	• The event log was cleared by the user.					○	page 8-23

8-3-4 Meaning of Error

This section describes the information that is given for individual errors.

How to Read Error Descriptions

The items that are used to describe individual errors (events) are described in the following copy of an error table.

<table>
<tr><td>Event name</td><td colspan="2">Gives the name of the error.</td><td colspan="2">Event code</td><td colspan="2">Gives the code of the error.</td></tr>
<tr><td>Meaning</td><td colspan="6">Gives a short description of the error.</td></tr>
<tr><td>Source</td><td colspan="2">Gives the source of the error.</td><td>Source details</td><td>Gives details on the source of the error.</td><td>Detection timing</td><td>Tells when the error is detected.</td></tr>
<tr><td rowspan="2">Error attributes</td><td>Level</td><td colspan="2">Tells the level of influence on control. *1</td><td>Log category</td><td colspan="2">Tells which log the error is saved in. *2</td></tr>
<tr><td>Recovery</td><td colspan="5">Gives the recovery method. *3</td></tr>
<tr><td>Effects</td><td>User program</td><td>Tells what will happen to execution of the user program. *4</td><td>Operation</td><td colspan="3">Provides special information on the operation that results from the error.</td></tr>
<tr><td>Indicators</td><td colspan="6">Gives the status of the built-in EtherNet/IP port and built-in EtherCAT port indicators. Indicator status is given only for errors in the EtherCAT Master Function Module and the EtherNet/IP Function Module.</td></tr>
<tr><td rowspan="2">System-defined variables</td><td>Variable</td><td>Data type</td><td>Name</td><td colspan="3"></td></tr>
<tr><td colspan="6">Lists the variable names, data types, and meanings for system-defined variables that provide direct error notification, that are directly affected by the error, or that contain settings that cause the error.</td></tr>
<tr><td rowspan="2">Cause and correction</td><td>Assumed cause</td><td>Correction</td><td>Prevention</td><td colspan="3"></td></tr>
<tr><td colspan="6">Lists the possible causes, corrections, and preventive measures for the error.</td></tr>
<tr><td>Attached information</td><td colspan="6">This is the attached information that is displayed by the Support Software or an HMI. *5, *6</td></tr>
<tr><td>Precautions/ Remarks</td><td colspan="6">Provides precautions, restrictions, and supplemental information. If the user can set the event level, the event levels that can be set, the recovery method, operational information, and other information are also provided.</td></tr>
</table>

*1. One of the following:
- Major fault: Major fault level
- Partial fault: Partial fault level
- Minor fault: Minor fault level
- Observation
- Information

*2. One of the following:
- System: System event log
- Access: Access event log

*3. One of the following:
- Automatic recovery: Normal status is restored automatically when the cause of the error is removed.
- Error reset: Normal status is restored when the error is reset after the cause of the error is removed.
- Cycle the power supply: Normal status is restored when the power supply to the Controller is turned OFF and then back ON after the cause of the error is removed.
- Controller reset: Normal status is restored when the Controller is reset after the cause of the error is removed.
- Depends on cause: The recovery method depends on the cause of the error.

*4. One of the following:
- Continues: Execution of the user program will continue.
- Stops: Execution of the user program stops.
- Starts: Execution of the user program starts.

*5. “System information” indicates internal system information that is used by OMRON.

*6. Refer to the appendices of the troubleshooting manual for the connected CPU Unit or Industrial PC for the applicable range of the HMI Troubleshooter.

Error Descriptions

This section describes errors that may occur in a High-speed Counter Unit.

Event name	Non-volatile Memory Hardware Error			**Event code**	00200000 hex	
Meaning	An error occurred in non-volatile memory.					
Source	Depends on where the Support Software is connected and the system configuration.		**Source details**	NX Unit	**Detection timing**	When power is turned ON to the NX Unit
Error attributes	**Level**	Minor fault		**Log category**	System	
	Recovery	For the NX bus of CPU Units Cycle the power supply to the Unit or restart the NX bus. For Communications Coupler Units Cycle the power supply to the Unit or restart the Slave Terminal. If the errors are detected in the Controller, reset all of the errors in the Controller.				
Effects	**User program**	Continues.	**Operation**	Writing to non-volatile memory will not be possible.		
System-defined variables	**Variable**		**Data type**		**Name**	
	None		---		---	
Cause and correction	**Assumed cause**		**Correction**		**Prevention**	
	Non-volatile memory failure.		For the NX bus of CPU Units Cycle the power supply to the Unit or restart the NX bus. If the error persists even after you make the above correction, replace the relevant NX Unit. For Communications Coupler Units Cycle the power supply to the Unit or restart the Slave Terminal. If the error persists even after you make the above correction, replace the relevant NX Unit.		None	
Attached information	None					
Precautions/Remarks	None					

Event name	Control Parameter Error in Master		**Event code**	10410000 hex	
Meaning	An error occurred in the control parameters that are saved in the master.				
Source	Depends on where the Support Software is connected and the system configuration.	**Source details**	NX Unit	**Detection timing**	When power is turned ON to the NX Unit
Error attributes	**Level**	Minor fault	**Log category**	System	
	Recovery	For the NX bus of CPU Units When Fail-soft Operation Is Set to *Stop* Restart the NX Unit and then reset the error in the NX Bus Function Module. When Fail-soft Operation Is Set to *Fail-soft* Restart the NX Unit and then reset the error in the NX Unit. For Communications Coupler Units When Fail-soft Operation Is Set to *Stop* If the errors are detected in the Controller, restart the NX Unit and then reset all of the errors in the Controller. If the errors are not detected in the Controller, restart the NX Unit and then reset the error in the Communications Coupler Unit. When Fail-soft Operation Is Set to *Fail-soft* Restart the NX Unit and then reset the error in the Communications Coupler Unit.				
Effects	**User program**	Continues.	**Operation**	I/O refreshing for the NX Unit stops.	
System-defined variables	**Variable**		**Data type**	**Name**	
	None		---	---	
Cause and correction	**Assumed cause**		**Correction**	**Prevention**	
	For the NX bus of CPU Units				
	The power supply to the CPU Unit was turned OFF while writing the Unit operation settings was in progress. Or there is an error in the area of the non-volatile memory in the CPU Unit in which the Unit operation settings for the relevant NX Unit are saved.		Download the Unit operation settings of the NX Unit again. If the error persists even after you make the above correction, replace the CPU Unit.	Do not turn OFF the power supply to the CPU Unit while transfer of the Unit operation settings for the NX Unit or save of NX Unit parameters by a message is in progress.	
	For Communications Coupler Units				
	The power supply to the Communications Coupler Unit was turned OFF while writing the Unit operation settings was in progress. Or there is an error in the area of the non-volatile memory in the Communications Coupler Unit in which the Unit operation settings for the relevant NX Unit are saved.		Download the Unit operation settings of the NX Unit again. If the error occurs again even after you make the above correction, replace the Communications Coupler Unit.	Do not turn OFF the power supply to the Communications Coupler Unit while transfer of the Unit operation settings for the NX Unit by the Support Software or save of NX Unit parameters by a message is in progress.	
Attached information	None				
Precautions/ Remarks	None				

Event name	Counter Log Data I/O Allocation Setting Error		**Event code**	39200000 hex	
Meaning	The I/O allocation setting of Ch1 Counter Log Data is incorrect.				
Source	Depends on where the Support Software is connected and the system configuration.	**Source details**	NX Unit	**Detection timing**	When power is turned ON to the NX Unit
Error attributes	**Level**	Minor fault	**Log category**	System	
	Recovery	For the NX bus of CPU Units Restart the NX bus. For Communications Coupler Units Restart the Slave Terminal.			
Effects	**User program**	Continues.	**Operation**	I/O refreshing for the NX Unit stops.	
System-defined variables	**Variable**		**Data type**	**Name**	
	None		---	---	
Cause and correction	**Assumed cause**		**Correction**	**Prevention**	
	The I/O allocation setting of Ch1 Counter Log Data is incorrect. Not allocated in numerical order from Ch1 Counter Log Data1. Example: Ch1 Counter Log Data1 and Ch1 Counter Log Data3 are allocated, but Ch1 Counter Log Data2 is not.		Correct the Ch1 Counter Log Data I/O allocation settings and download again.	Set the Ch1 Counter Log Data I/O allocation correctly.	
Attached information	None				
Precautions/Remarks	None				

Event name	Comparison Initial Data Setting Error			**Event code**	39210000 hex	
Meaning	Comparison initial data setting is out of range.					
Source	Depends on where the Support Software is connected and the system configuration.		**Source details**	NX Unit	**Detection timing**	When power is turned ON to the NX Unit
Error attributes	**Level**	Minor fault		**Log category**	System	
	Recovery	Reset error in the NX Unit.				
Effects	**User program**	Continues.	**Operation**	Operation will continue. Comparison operation will not be performed for comparison data with a setting error.		
System-defined variables	**Variable**		**Data type**		**Name**	
	None		---		---	
Cause and correction	**Assumed cause**		**Correction**		**Prevention**	
	Comparison initial data setting is out of range. For Target Comparison • Target Comparison Data Target Value Default Value is outside the range of minimum to maximum counter values. For Range Comparison • Range Comparison Data Lower Limit Default Value and Range Comparison Data Upper Limit Default Value are outside the range of minimum to maximum counter values. • In linear mode, the lower limit is set larger than the upper limit.		Correct the target value or range comparison data to be within the setting range. For Target Comparison • Set the Target Comparison Data Target Value Default Value within the range of minimum to maximum counter values. For Range Comparison • Set the Range Comparison Data Lower Limit Default Value and Range Comparison Data Upper Limit Default Value within the range of minimum to maximum counter values. • In linear mode, set the lower limit below or equal to the upper limit.		Set the target value or range comparison data to be within the setting range. For Target Comparison • Set the Target Comparison Data Target Value Default Value within the range of minimum to maximum counter values. For Range Comparison • Set the Range Comparison Data Lower Limit Default Value and Range Comparison Data Upper Limit Default Value within the range of minimum to maximum counter values. • In linear mode, set the lower limit below or equal to the upper limit.	

Attached information	Attached information 1: Error Location For Target Comparison 01 hex: Ch1 Comparison Data0 02 hex: Ch1 Comparison Data1 04 hex: Ch1 Comparison Data2 08 hex: Ch1 Comparison Data3 10 hex: Ch2 Comparison Data0 20 hex: Ch2 Comparison Data1 40 hex: Ch2 Comparison Data2 80 hex: Ch2 Comparison Data3 If this error occurs at the same time for more than one location, the sum of the codes is given. For example, if errors occur at the same time for all Ch1 Comparison Data0 to 3, then 0F hex is given. For Range Comparison 01 hex: Ch1 Comparison Data0 02 hex: Ch2 Comparison Data0 04 hex: Ch3 Comparison Data0 08 hex: Ch4 Comparison Data0 10 hex: Ch5 Comparison Data0 20 hex: Ch6 Comparison Data0 If this error occurs at the same time for more than one location, the sum of the codes is given. For example, if errors occur at the same time for all Ch1 to 6 Comparison Data0, then 3F hex is given.
Precautions/ Remarks	None

Event name	NX Unit Processing Error		**Event code**	40200000 hex	
Meaning	A fatal error occurred in an NX Unit.				
Source	Depends on where the Support Software is connected and the system configuration.	**Source details**	NX Unit	**Detection timing**	Continuously
Error attributes	**Level**	Minor fault	**Log category**	System	
	Recovery	For the NX bus of CPU Units Cycle the power supply to the NX Unit and then reset the error in the NX Bus Function Module. For Communications Coupler Units Cycle the power supply to the NX Unit and then reset the error in the Communications Coupler Unit.			
Effects	**User program**	Continues.	**Operation**	I/O refreshing for the NX Unit stops. Messages cannot be sent to the NX Unit.	
System-defined variables	**Variable**		**Data type**	**Name**	
	None		---	---	
Cause and correction	**Assumed cause**		**Correction**	**Prevention**	
	An error occurred in the software.		For the NX bus of CPU Units Cycle the power supply to the Unit, restart the NX Unit, or restart the NX bus. If this error occurs again even after the above correction, contact your OMRON representative. For Communications Coupler Units Cycle the power supply to the Unit, restart the NX Unit, or restart the Slave Terminal. If this error occurs again even after the above correction, contact your OMRON representative.	None	
Attached information	Attached information 1: System information Attached information 2: System information Attached information 3: System information Attached information 4: System information				
Precautions/ Remarks	None				

Event name	NX Unit I/O Communications Error		**Event code**	80200000 hex	
Meaning	An I/O communications error occurred in an NX Unit.				
Source	Depends on where the Support Software is connected and the system configuration.	**Source details**	NX Unit	**Detection timing**	Continuously
Error attributes	**Level**	Minor fault	**Log category**	System	
	Recovery	For the NX bus of CPU Units When Fail-soft Operation Is Set to *Stop* Reset the error in the NX Bus Function Module. When Fail-soft Operation Is Set to *Fail-soft* Reset the error in the NX Unit. For Communications Coupler Units When Fail-soft Operation Is Set to *Stop* If the errors are detected in the Controller, reset all of the errors in the Controller. If the errors are not detected in the Controller, reset errors in the Communications Coupler Unit and NX Unit. When Fail-soft Operation Is Set to *Fail-soft* Reset errors in the Communications Coupler Unit and NX Unit.			
Effects	**User program**	Continues.	**Operation**	The NX Unit will continue to operate. Input data: Updating input values stops. Output data: The output values depend on the Load Rejection Output Setting.	
System-defined variables	**Variable**		**Data type**	**Name**	
	None		---	---	
Cause and correction	**Assumed cause**		**Correction**	**Prevention**	
	For the NX bus of CPU Units				
	An error that prevents normal NX bus communications occurred in a CPU Unit.		Check the error that occurred in the CPU Unit and perform the required corrections.	Take preventive measures against the error that occurred in the CPU Unit.	
	An NX Unit is not mounted properly.		Mount the NX Units and End Cover securely and secure them with End Plates.	Mount the NX Units and End Cover securely and secure them with End Plates.	
	The power cable for the Unit power supply is disconnected. Or, the wiring from the Unit power supply to the NX Units is incorrect.		Wire the Unit power supply to the NX Units securely.	Wire the Unit power supply to the NX Units securely.	
	The power cable for the Unit power supply is broken.		If the power cable between the Unit power supply and the NX Units is broken, replace it.	None	
	The voltage of the Unit power supply is outside the specified range, or the capacity of the Unit power supply is insufficient.		Configure the power supply system configuration correctly according to the power supply design method.	Configure the power supply system configuration correctly according to the power supply design method.	
	There is a hardware error in an NX Unit.		If the error persists even after you make the above correction, replace the NX Unit.	None	

Cause and correction	For Communications Coupler Units		
	An error that prevents normal NX bus communications occurred in a Communications Coupler Unit.	Check the error that occurred in the Communications Coupler Unit and perform the required corrections.	Take preventive measures against the error that occurred in the Communications Coupler Unit.
	The NX Unit is not mounted properly.	Mount the NX Units and End Cover securely and secure them with End Plates.	Mount the NX Units and End Cover securely and secure them with End Plates.
	The power cable for the Unit power supply is disconnected. Or, the wiring from the Unit power supply to the NX Units is incorrect.	Correctly wire the Unit power supply to the NX Units.	Correctly wire the Unit power supply to the NX Units.
	The power cable for the Unit power supply is broken.	If the power cable between the Unit power supply and the NX Units is broken, replace it.	None
	The voltage of the Unit power supply is outside the specified range. Or, the capacity of the Unit power supply is insufficient.	Correctly configure the power supply system according to the power supply design methods.	Correctly configure the power supply system according to the power supply design methods.
	There is a hardware error in the NX Unit.	If the error occurs again even after you make the above correction, replace the NX Unit.	None
Attached information	None		
Precautions/ Remarks	None		

Event name	NX Unit Output Synchronization Error		**Event code**	80210000 hex	
Meaning	An output synchronization error occurred in the NX Unit.				
Source	Depends on where the Support Software is connected and the system configuration.	**Source details**	NX Unit	**Detection timing**	Continuously
Error attributes	**Level**	Minor fault	**Log category**	System	
	Recovery	For the NX bus of CPU Units Reset the error in the NX Bus Function Module. For Communications Coupler Units Reset all of the errors in the Controller.			
Effects	**User program**	Continues.	**Operation**	The NX Unit will continue to operate. Input data: Updating input values stops. Output data: The output values depend on the Load Rejection Output Setting.	
System-defined variables	**Variable**		**Data type**	**Name**	
	None		---	---	
Cause and correction	**Assumed cause**		**Correction**	**Prevention**	
	For the NX bus of CPU Units				
	I/O refreshing on the NX bus is not performed normally due to an error in the CPU Unit.		Check the error that occurred in the CPU Unit and perform the required corrections.	Take preventive measures against the error that occurred in the CPU Unit.	
	For Communications Coupler Units				
	The communications cable connected to the Communications Coupler Unit is broken or the connection is faulty.		Replace the communications cable or wire the cable correctly.	Wire the communications cable correctly.	
	The communications cable is affected by noise.		Set the Consecutive Communications Error Detection Count parameter for the Communications Coupler Unit to a suitable value that will not cause problems in operation. Implement noise countermeasures if there is excessive noise.	Implement noise countermeasures. Refer to the operation manuals for the specific Units for noise countermeasures.	
Attached information	None				
Precautions/ Remarks	None				

Event name	NX Unit Clock Not Synchronized Error		**Event code**	80240000 hex	
Meaning	A time information error occurred in an NX Unit.				
Source	Depends on where the Support Software is connected and the system configuration.	**Source details**	NX Unit	**Detection timing**	Continuously
Error attributes	**Level**	Minor fault	**Log category**	System	
	Recovery	For the NX bus of CPU Units Cycle the power supply to the Unit. For Communications Coupler Units Cycle the power supply to the Unit and then reset all of the errors in the Controller.			
Effects	**User program**	Continues.	**Operation**	The NX Unit will continue to operate. Input data: Updating input values stops. Output data: The output values depend on the Load Rejection Output Setting.	
System-defined variables	**Variable**		**Data type**	**Name**	
	None		---	---	
Cause and correction	**Assumed cause**		**Correction**	**Prevention**	
	For the NX bus of CPU Units				
	There is a hardware error in an NX Unit.		If the error occurs only in a specific NX Unit, replace the relevant NX Unit.	None	
	There is a hardware error in a CPU Unit.		If the error occurs in all of the NX Units mounted on a CPU Unit, replace the CPU Unit.	None	
	For Communications Coupler Units				
	There is a hardware error in an NX Unit.		If the error occurs only in a specific NX Unit, replace the relevant NX Unit.	None	
	There is a hardware error in an EtherCAT Coupler Unit.		If the error occurs in all of the NX Units mounted on a Communications Coupler Unit, replace the Communications Coupler Unit.	None	
Attached information	None				
Precautions/ Remarks	None				

Event name	NX Message Communications Error			**Event code**	80220000 hex	
Meaning	An error was detected in message communications and the message frame was discarded.					
Source	Depends on where the Support Software is connected and the system configuration.		**Source details**	NX Unit	**Detection timing**	During NX message communications
Error attributes	**Level**	Observation		**Log category**	System	
	Recovery	---				
Effects	**User program**	Continues.	**Operation**	Not affected.		
System-defined variables	**Variable**		**Data type**		**Name**	
	None		---		---	
Cause and correction	**Assumed cause**		**Correction**		**Prevention**	
	For the NX bus of CPU Units					
	The message communications load is high.		Reduce the number of times that instructions are used to send NX messages.		Reduce the number of times that instructions are used to send NX messages.	
	For Communications Coupler Units					
	The message communications load is high.		Reduce the number of times that instructions are used to send NX messages.		Reduce the number of times that instructions are used to send NX messages.	
	The communications cable is disconnected or broken. This cause does not apply if attached information 2 is 0 (NX bus).		Connect the communications cable securely.		Connect the communications cable securely.	
	Message communications were cutoff by executing the followings in message communications. • Transfer of parameters by the Support Software • Restoration of the backup data (if this error occurred in the EtherCAT Slave Terminal) • Disconnection of an EtherCAT slave (if this error occurred in the EtherCAT Slave Terminal)		---		---	
Attached information	Attached information 1: System information Attached information 2: Type of communications where error occurred 0: NX bus 1: EtherCAT 2: Serial communications (USB) 3: EtherNet/IP 65535: Internal Unit communications (routing)					
Precautions/ Remarks	None					

Event name	Event Log Cleared			**Event code**	90400000 hex	
Meaning	The event log was cleared.					
Source	Depends on where the Support Software is connected and the system configuration.		**Source details**	NX Unit	**Detection timing**	When commanded from user
Error attributes	**Level**	Information		**Log category**	Access	
	Recovery	---				
Effects	**User program**	Continues.	**Operation**	Not affected		
System-defined variables	**Variable**		**Data type**		**Name**	
	None		---		---	
Cause and correction	**Assumed cause**		**Correction**		**Prevention**	
	The event log was cleared by the user.		---		---	
Attached information	Attached information 1: Events that were cleared 1: The system event log was cleared. 2: The access event log was cleared.					
Precautions/ Remarks	None					

8-4 Resetting Errors

Refer to the troubleshooting manual for the connected CPU Unit or the user's manual for the Communications Coupler Unit for information on how to reset errors.

8-5 Unit-specific Troubleshooting

The following table shows the errors, their assumed causes, and corrections for the High-speed Counter Units.

Problem	Assumed cause	Correction
No count pulses are detected.	The input wiring is not correct.	Check the wiring with the connected device.
	No power is supplied by the I/O power supply.	Check that the I/O power is supplied.
	The I/O power supply voltage is outside the rated range.	Set the I/O power supply voltage so that it is within the rated voltage range.
	The setting of the Pulse Input Method Setting is not correct.	Check the wiring with the connected device.
	Counter Enable in the Ch□ Counter Operation Command parameter is set to 0 (counter disabled).	Set Counter Enable in the Counter Operation Command parameter to 1 (counter enabled).
	The gate control via external input is set to gate closed (counter disabled). (2ch mode only)	Set the external input gate control signal to gate open (counter enabled).
	A connected device is disconnected.	Check the wiring with the connected device.
	A connected device is defective.	Replace the connected device.
	The pulse input method for the High-speed Counter Unit and the pulse output method for the connected external device do not match.	Match the pulse input method for the High-speed Counter Unit and the pulse output method for the connected external device.
Pulses are not counted correctly.	The input pulse frequency exceeds the maximum frequency in the Unit specifications.	Set the input pulse frequency to within the allowed range in the Unit specifications or within the maximum value for the mode.
	The input pulse frequency exceeds the frequency set with the counter noise filter.	Set the counter noise filter to the input pulse frequency or above.
	The pulse input method for the High-speed Counter Unit and the pulse output method for the connected external device do not match.	Match the pulse input method for the High-speed Counter Unit and the pulse output method for the connected external device.
Gate control is not executed even when gate control is input with external input. (in 2ch mode only)	The external input wiring is not correct.	Check the wiring with the connected device.
	A connected device is defective.	Replace the connected device.
	External input in External Input Function Selection is not allocated correctly to gate control.	Allocate external input correctly to gate control.
	Counter Enable in the Ch□ Counter Operation Command parameter is set to 0 (disabled).	Set Counter Enable in the Ch□ Counter Operation Command parameter to 1 (counter enabled).

Problem	Assumed cause	Correction
The counter value is not reset even when an external input or Z-phase counter reset is received.	The external input or Z-phase wiring is not correct.	Check the wiring with the connected device.
	A connected device is defective.	Replace the connected device.
	External input in External Input Function Selection is not allocated correctly to counter reset. (for external input counter reset)	Allocate external input correctly to counter reset.
	External Counter Reset Enable in the Ch□ Counter Operation Command parameter is set to 0 (disabled).	Set External Counter Reset Enable in the Ch□ Counter Operation Command parameter to 1 (enabled).
	Counter Reset Mode in the Ch□ Counter Operation Command parameter is set to 1 (execute only once, and counter reset has already been executed once.	After disabling counter reset with Ch□ Counter Operation Command or External Input, once again enable it and then execute counter reset.
The counter value is not preset even when an external input counter preset is received.	The external input wiring is not correct.	Check the wiring with the connected device.
	A connected device is defective.	Replace the connected device.
	External input in External Input Function Selection is not allocated correctly to counter preset.	Allocate external input correctly to counter preset.
	External Counter Preset Enable in the Ch□ Counter Operation Command parameter is set to 0 (disabled).	Set External Counter Preset Enable in the Ch□ Counter Operation Command parameter to “1” (enabled).
	Because the Ch□ Preset Command Value has been set to a value out of range, the Ch□ Counter Status Counter Preset Value Error Flag is now 1 (setting error generated).	Set the Ch□ Preset Command Value with a value between the Ch□ Minimum Counter Value and the Ch□ Maximum Counter Value.
The counter value cannot be latched even when Counter Latch1 or Counter Latch2 is input from external input.	The external input wiring is not correct.	Check the wiring with the connected device.
	A connected device is defective.	Replace the connected device.
	External input in External Input Function Selection is not allocated correctly to Counter Latch1 or Counter Latch2.	Allocate external input correctly to Counter Latch1 or Counter Latch2.
	External Counter Latch1 Enable or External Counter Latch2 Enable in the Ch□ Counter Operation Command parameter is set to 0 (disabled).	Set External Counter Latch1 Enable or External Counter Latch2 Enable in the Ch□ Counter Operation Command parameter to 1 (enabled).
Counter Log Enable/Disable does not switch even when input from external input.	The external input wiring is not correct.	Check the wiring with the connected device.
	A connected device is defective.	Replace the connected device.
	External input in External Input Function Selection is not allocated correctly to Counter Log Enable/Disable.	Allocate external input correctly to Counter Log Enable/Disable.
	Counter Log Enable in the Ch1 Counter Log Operation Command parameter is set to 0 (disabled).	Set Counter Log Enable in the Ch1 Counter Log Operation Command parameter to 1 (enabled).

Problem	Assumed cause	Correction
In target comparison, although the present value and the target value match, the output device is not operating.	The external output wiring is not correct.	Check the wiring with the connected device.
	A connected device is defective.	Replace the connected device.
	Target comparison data is not set correctly.	Read the target comparison data and check that it is set correctly. If the setting is incorrect, set it again.
	Target Comparison Data Comparison Setting Data Enable is set to Disable.	Set Comparison Setting Data Enable to Enable.
	Another target comparison in the same channel has been generated within 1 ms immediately previously. A target comparison generated within 1 ms of another target comparison may not be detected.	Leave an interval of at least 1 ms after a target match in the same channel before generating the next target match.
	A counter reset or counter preset in the same channel has been generated within 1 ms immediately previously. A target match generated within 1 ms of a counter reset or counter preset may not be detected.	Leave an interval of at least 1 ms after a counter reset or counter preset in the same channel before generating the next target match.
	The target match order with other comparison data changed because of target value correction due to advance time. When the matching order changes, the target match may not be detected.	To prevent the target match order with other comparison data from changing because of target value correction due to advance time, set the target comparison data.
	Force ON/OFF Function is enabled.	Disable Force ON/OFF Function.
In range comparison, although the present value is beyond the upper or lower limit, the output device is not operating.	The external output wiring is not correct.	Check the wiring with the connected device.
	A connected device is defective.	Replace the connected device.
	Range comparison data is not set correctly.	Read the range comparison data and check that it is set correctly. If the setting is incorrect, set it again.
	Range Comparison Data Comparison Setting Data Enable is set to Disable.	Set Comparison Setting Data Enable to Enable.
	Force ON/OFF Function is enabled.	Disable Force ON/OFF Function.

8-6 Troubleshooting Flowchart

Refer to the troubleshooting manual for the connected CPU Unit or the user's manual for the Communications Coupler Unit for information on the standard flow for troubleshooting errors.

9

Inspection and Maintenance

This section describes how to clean, inspect, and maintain the system.

9-1 Cleaning and Inspection 9-2
9-1-1 Cleaning 9-2
9-1-2 Periodic Inspections 9-2
9-2 Maintenance Procedures 9-5

9-1 Cleaning and Inspection

This section describes daily maintenance and the cleaning and inspection methods.
Inspect the High-speed Counter Units daily or periodically in order to keep it in optimal operating condition.

9-1-1 Cleaning

Clean the High-speed Counter Units regularly as described below in order to keep it in optimal operating condition.

- Wipe the equipment over with a soft, dry cloth when performing daily cleaning.
- If dirt remains even after wiping with a soft, dry cloth, wipe with a cloth that has been wet with a sufficiently diluted detergent (2%) and wrung dry.
- A smudge may remain on the NX Unit from gum, vinyl, or tape that was left on for a long time. Remove the smudge when cleaning.

Precautions for Correct Use

- Never use volatile solvents, such as paint thinner, benzene, or chemical wipes.
- Do not touch the NX bus connectors.

9-1-2 Periodic Inspections

Although the major components in NX Units have an extremely long life time, they can deteriorate under improper environmental conditions. Periodic inspections are thus required.
Inspection is recommended at least once every six months to a year, but more frequent inspections will be necessary in adverse environments.
Take immediate steps to correct the situation if any of the conditions in the following table are not met.

Periodic Inspection Items

No.	Inspection item	Inspection details	Criteria	Correction
1	External power supply	Is the power supply voltage measured at the terminal block within standards?	Within the power supply voltage range	Use a voltage tester to check the power supply at the terminals. Take necessary steps to bring the power supply within the power supply voltage range.
2	I/O power supply	Is the power supply voltage measured at the I/O terminal block within standards?	Voltages must be within I/O specifications of each NX Unit.	Use a voltage tester to check the power voltage at the terminals. Take necessary steps to bring the I/O power supply within NX Unit standards.

No.	Inspection item	Inspection details	Criteria	Correction
3	Ambient environment	Is the ambient operating temperature within standards?	0 to 55°C	Use a thermometer to check the temperature and ensure that the ambient operating temperature remains within the allowed range of 0 to 55°C.
		Is the ambient operating humidity within standards?	Relative humidity must be 10% to 95% with no condensation.	Use a hygrometer to check the humidity and ensure that the ambient operating humidity remains between 10% and 95%. Make sure that condensation does not occur due to rapid changes in temperature.
		Is it subject to direct sunlight?	Not in direct sunlight	Protect the Controller if necessary.
		Is there an accumulation of dirt, dust, salt, metal powder, etc.?	No accumulation	Clean and protect the Controller if necessary.
		Is there water, oil, or chemical sprays hitting the Controller?	No spray	Clean and protect the Controller if necessary.
		Are there corrosive or flammable gases in the area of the Controller?	No gases	Check by smell or use a sensor.
		Is the Unit subject to shock or vibration?	Vibration resistance and shock resistance must be within specifications.	Install cushioning or other vibration and shock absorbing equipment if necessary.
		Are there noise sources near the Controller?	No significant noise sources	Either separate the Controller and noise source or protect the Controller.
4	Installation and wiring	Are the DIN Track mounting hooks for each NX Unit securely locked?	No looseness	Securely lock the DIN Track mounting hooks.
		Are the cable connectors fully inserted and locked?	No looseness	Correct any improperly installed connectors.
		Are there any loose screws on the End Plates (PFP-M)?	No looseness	Tighten loose screws with a Phillips-head screwdriver.
		Are the NX Units connected to each other along the hookup guides and until they touch the DIN track?	You must connect and fix the NX Units to the DIN track.	Connect the NX Units to each other along the hookup guides and insert them until they touch the DIN track.
		Are there any damaged external wiring cables?	No visible damage	Check visually and replace cables if necessary.

Tools Required for Inspections

Required Tools

- Phillips screwdriver
- Flat-blade screwdriver

- Voltage tester or digital voltmeter
- Industrial alcohol and pure cotton cloth

● Tools Required Occasionally

- Oscilloscope
- Thermometer and hygrometer

9-2 Maintenance Procedures

When you replace a High-speed Counter Unit, follow the procedure in the user's manual for the connected CPU Unit or Communications Coupler Unit.

A

Appendices

This section describes the data sheets of the High-speed Counter Units and their dimensions.

A-1 Data Sheet A-2
- A-1-1 Models A-2
- A-1-2 High-speed Counter Units A-3
- A-1-3 Counter Input Timing Specifications A-19
- A-1-4 PWM Output Timing Specifications A-22
- A-1-5 Installation Orientation and Restrictions A-23

A-2 Dimensions A-26

A-3 List of NX Objects A-28
- A-3-1 Format of NX Object Descriptions A-28
- A-3-2 Unit Information Objects A-28
- A-3-3 Objects That Accept I/O Allocations A-31
- A-3-4 Other Objects A-44

A-4 Sample Programming A-61
- A-4-1 Counter Log Data Read A-61
- A-4-2 Writing/Reading Target Comparison Data A-67
- A-4-3 2ch Mode Writing/Reading Range Comparison Data A-75

A-5 Advance Time Error A-83
- A-5-1 Errors Due to Counter Resolution A-83
- A-5-2 Counter Value Calculation Error per 1 μs A-84

A-6 Version Information with CPU Units A-86
- A-6-1 Relationship between Unit Versions of Units A-86

A-7 Version Information with Communications Coupler Units A-87
- A-7-1 Connection to an EtherCAT Coupler Unit A-87
- A-7-2 Connection to an EtherNet/IP Coupler Unit A-88

A-8 Displaying the Edit Unit Operation Settings Tab Page A-90
- A-8-1 Connection to the CPU Unit A-90
- A-8-2 Slave Terminal A-91

A-9 Edit Unit Operation Settings Tab Page A-93

A-1 Data Sheet

This section provides the specifications of the High-speed Counter Units.

A-1-1 Models

Model	Number of counter channels *1	External inputs	External outputs	Maximum response frequency*2	I/O refreshing method	Remarks	Reference
NX-CT2120	2 (NPN)	6 (NPN)	6 (NPN)	1 MHz	• Free-Run refreshing • Synchronous I/O refreshing • Task period prioritized refreshing	5 V/24 V voltage input	page A-7
NX-CT2220	2 (PNP)	6 (PNP)	6 (PNP)	1 MHz			page A-10
NX-CT2320	2	6 (NPN)	6 (NPN)	4 MHz		Line receiver input	page A-13
NX-CT2420	2	6 (PNP)	6 (PNP)	4 MHz			page A-16

*1. When set to 6ch mode, the counter channel number is 6 channels.
*2. When set to 6ch mode, the maximum response frequency is 100 kHz.

A-1-2 High-speed Counter Units

Description of Datasheets

The meanings of the items on the data sheet of the High-speed Counter Unit are explained in the table below.

Item		Description
Unit name		The name of the Unit.
Model		The number of the Unit.
Number of channels		The number of counter input points provided by the Unit.
External connection terminals		The type of terminal block or connector that is used to wire the Unit. This specification includes the number of terminals for a Screwless Clamping Terminal Block.
I/O refreshing method		The I/O refreshing methods that are used by the Unit. The following refreshing methods are supported: Free-Run refreshing, synchronous I/O refreshing, and task period prioritized refreshing.
Indicators		The type of indicators on the Unit and the layout of those indicators.
Input signals		The input signal types and point numbers.
Output signal		The output signal types and point numbers.
Counter input format		The format of counter input points provided by the Unit.
Pulse Input Method		The Unit's usable pulse input method.
Counter range		The Unit's usable counting range. You can also set minimum and maximum values.
Counter functions	**Counter Type**	The Unit's usable counter functions.
	Counter controls	The Unit's usable counter control functions.
	Latching	The Unit's usable latch functions.
	Measurements	The Unit's usable measurement functions.

Item		Description
Counter input specifications (voltage input)	**Input voltage (24 V)**	The rated input voltage and voltage range for 24 V input.
	ON voltage/ON current (24 V)	The input 24 V input voltage at which the input turns ON and the input current at that time.
	OFF voltage/OFF current (24 V)	The input 24 V input voltage at which the input turns OFF and the input current at that time.
	Input current (24 V)	The input current at the rated voltage for 24 V input.
	Input voltage (5 V)	The rated input voltage and voltage range for 5 V input.
	ON voltage/ON current (5 V)	The input 5 V input voltage at which the input turns ON and the input current at that time.
	OFF voltage/OFF current (5 V)	The input 5 V input voltage at which the input turns OFF and the input current at that time.
	Input current (5 V)	The input current at the rated voltage for 5 V input.
	Maximum response frequency	The maximum frequency of the counter input.
	Internal I/O common processing	The polarity of the connected input device. There are models with NPN and PNP connections.
	I/O power supply method	The method for supplying I/O power for the Unit.
	External power supply output (5 V)	The specifications of power supplied from the Unit for pulse output devices such as encoders.
Counter input specifications (line receiver input specifications)	**Input voltage**	The rated input voltage and voltage range.
	High-level input voltage	High-level input voltage.
	Low-level input voltage	Low-level input voltage.
	Input impedance	The input impedance.
	Hysteresis voltage	The hysteresis voltage.
	Maximum response frequency	The maximum frequency of the counter input.
	External power supply output (5 V)	The specifications of power supplied from the Unit for pulse output devices such as encoders.

Item		Description
External Input Specifications	Input voltage	The rated input voltage and voltage range.
	ON voltage/ON current	The input voltage at which the input turns ON and the input current at that time.
	OFF voltage/OFF current	The input voltage at which the input turns OFF and the input current at that time.
	Input current	The input current at the rated voltage.
	ON/OFF response time	The delay time in a change in the state of an input terminal reaching the internal circuit. The ON delay time is given first followed by the OFF delay time.
	Internal I/O common processing	The polarity of the connected input device. There are models with NPN and PNP connections.
	I/O power supply method	The method that is used to supply I/O power to the Unit.
External Output Specifications	Rated voltage	The rated output voltage.
	Load voltage range	The range of the load voltage that is supported.
	Maximum value of load current	External output maximum load current. The specifications for each output point and for the Unit are described.
	Residual voltage	The residual voltage when the output is ON.
	Leakage current	The leakage current when the output is OFF.
	ON/OFF response time	The delay time for which data in the internal circuit is reflected in the state of output elements. The ON delay time is given first followed by the OFF delay time.
	Internal I/O common processing	The polarity of the connected output device. There are models with NPN and PNP connections.
	Load Short-circuit Protection	Protection function for load short-circuits.
	I/O power supply method	The method that is used to supply I/O power to the Unit.
	Current consumption from I/O power supply	The current consumption of the Unit from the I/O power supply. This value does not include the load current of any external connection loads or the current consumption of any connected external devices.
Dimensions		The dimensions of the Unit. They are described as W × H × D. The unit is "mm".
Isolation method		The isolation method between the input circuit and internal circuit of the Unit.
Insulation resistance		The insulation resistance between the input circuit and internal circuit of the Unit.
Dielectric strength		The dielectric strength between the input circuit and internal circuit of the Unit.
NX Unit power consumption		The power consumption of the NX Unit power supply of the Unit. The power consumption of the Unit when the Unit is connected to the CPU Unit and to a Communications Coupler Unit.
Current consumption from I/O power supply		The current consumption of the I/O power supply terminals (IOV and IOG) on the Unit.
Weight		The weight of the Unit.
Circuit layout		The I/O circuit layout of the Unit.
Mounting orientation and restrictions		The installation orientation for a CPU Unit that includes the Unit and the installation orientation for a Slave Terminal that includes this Unit. Any restrictions to specifications that result from the installation orientation are also given.

Item	Description
Terminal connection diagram	The connection diagram between the Unit and external devices. Any I/O Power Supply Connection Units or Shield Connection Units that are required to connect the connected external devices are also shown.

Data Sheet Details

● NX-CT2120

Unit name	High-speed Counter Units	**Model**	NX-CT2120
Number of channels	2ch/6ch switching	**External connection terminals**	Screwless clamping terminal block (16 terminals × 2)
I/O refreshing method	Free-Run refreshing, synchronous I/O refreshing, or task period prioritized refreshing		
Indicators	TS LED, CH LED, A/B/Z LED, IN LED, OUT LED 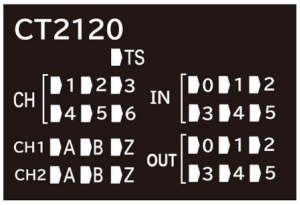 		
Input signals	Counter input terminal: In 2ch Mode: A-phase 2, B-phase 2, Z-phase 2 In 6ch Mode: A-phase 6 External input terminal: 6		
Output signal	External output terminal: 6		
Counter input format	Voltage input (5 V, 24 V)		
Pulse Input Method	In 2ch Mode: Phase differential pulse (multiplication x1/2/4), pulse + direction, up and down pulse inputs In 6ch Mode: Single-phase		
Counter range	-2147483648 to 2147483647		
Counter functions			
Counter Type	Ring counter or linear counter		
Counter controls	Gate control, counter reset, and counter preset		
Latching	In 2ch Mode: Counter Latch 2/ch In 6ch Mode: Counter Latch 1/ch		
Measurements	Pulse rate measurement and pulse period measurement		
Counter Input Specifications (Voltage input)			
Input voltage (24 V)	20.4 to 28.8 VDC (24 VDC +20%/−15%)	**Input voltage (5 V)**	4.5 to 5.5 VDC
ON voltage/ON current (24 V)	18.6 VDC min./3 mA min.	**ON voltage/ON current (5 V)**	4.5 VDC min./3 mA min.
OFF voltage/OFF current (24 V)	4.0 VDC max./1 mA max.	**OFF voltage/OFF current (5 V)**	1.5 VDC max./1 mA max.
Input current (24 V)	5.6 mA typical (24 VDC)	**Input current (5 V)**	5.3 mA typical (5 VDC)
Maximum response frequency	In 2ch Mode: A- and B-phase: Single-phase 250 kHz (phase differential pulse input at multiplication x4: 1 MHz), Z-phase: 250 kHz In 6ch Mode: Single-phase 100 kHz		
Internal I/O common processing	NPN		
I/O power supply method	Supply from the NX Bus		
External power supply output (5 V)*1	Output voltage: 4.9 to 5.25 VDC (5 VDC +5%/-2%) Output current: 500 mA/channel min., 1 A/unit min.		
External Input Specifications			

	Input voltage	20.4 to 28.8 VDC (24 VDC +20%/−15%)	**ON voltage/ON current**	15 VDC min./3 mA min.
	Input current	3.3 mA typical (24 VDC)	**OFF voltage/OFF current**	5.0 VDC max./1 mA max.
	ON/OFF response time	1 μs max./1 μs max.		
	Internal I/O common processing	NPN		
	I/O power supply method	Supply from the NX Bus		
External Output Specifications				
	Rated voltage	5 to 24 VDC		
	Load voltage range	4.75 to 28.8 VDC	**Residual voltage**	0.6 V max.
	Maximum value of load current	0.5 A/point, 1.8 A/Unit	**Leakage current**	0.1 mA max.
	ON/OFF response time	1 μs max./3 μs max. (at load current 7 to 500 mA)		
	Internal I/O common processing	NPN	**Load Short-circuit Protection**	None
	I/O power supply method	External supply, 4.75 to 28.8 VDC		
	Current consumption from I/O power supply	20 mA max.		
Dimensions		24 (W) × 100 (H) × 71 (D)	**Isolation method**	Photocoupler isolation
Insulation resistance		20 MΩ min. between isolated circuits (at 100 VDC)	**Dielectric strength**	510 VAC between isolated circuits for 1 minute at a leakage current of 5 mA max.
NX Unit power consumption		• Connected to a CPU Unit 1.45 W max. • Connected to Communications Coupler Unit 1.05 W max.	**Current consumption from I/O power supply**	Unit current consumption: 20 mA max. External 5 V power supply consumption: 0.25 x external 5 V power supply current consumption*2
Weight		140 g max.		

Circuit layout	Count input, external input 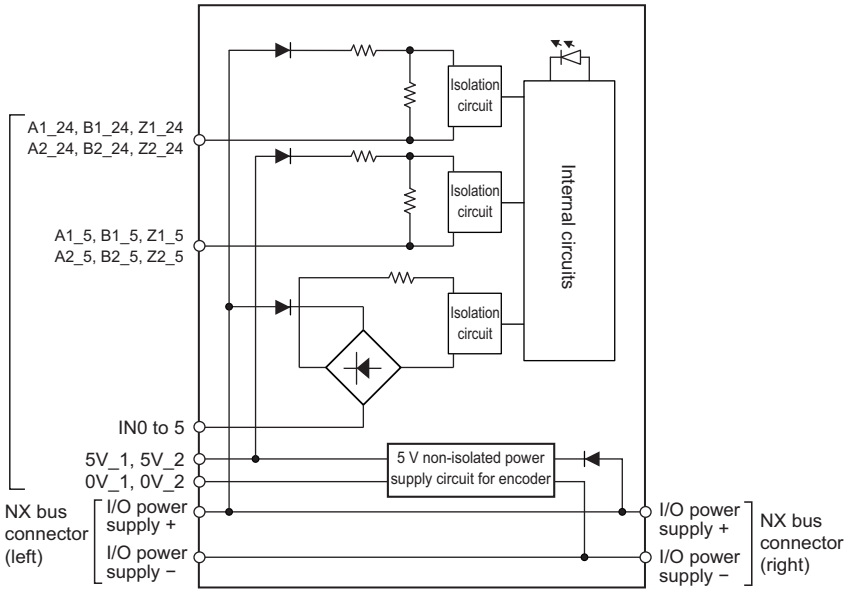 External output 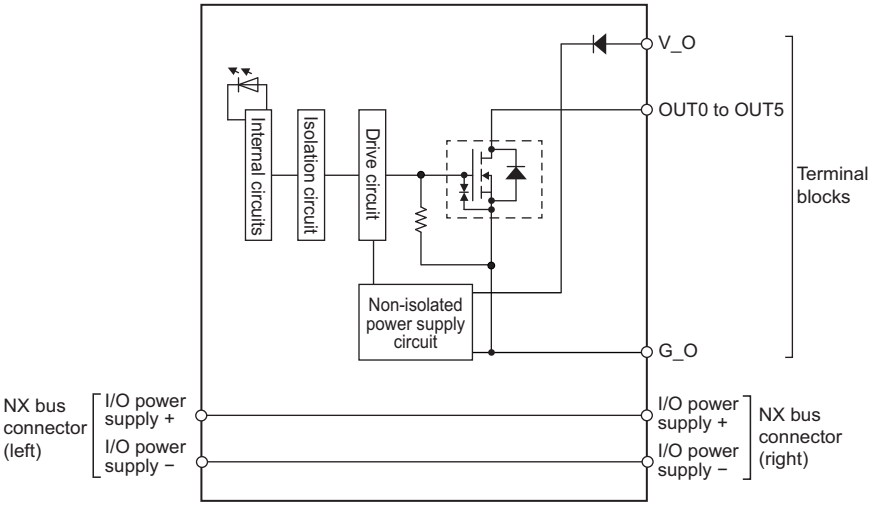
Installation orientation and restrictions	Refer to *A-1-5 Installation Orientation and Restrictions* on page A-23.
Terminal connection diagram	Refer to *4-4 Terminal Block Arrangement and Wiring Example* on page 4-20.

*1. When counter input is input voltage (24 V), external power supply (5 V) cannot be used.

*2. Use this formula to convert 5 V power supply current consumption to 24 V power supply current consumption.

● NX-CT2220

Unit name	High-speed Counter Units	**Model**	NX-CT2220
Number of channels	2ch/6ch switching	**External connection terminals**	Screwless clamping terminal block (16 terminals × 2)
I/O refreshing method	Free-Run refreshing, synchronous I/O refreshing, or task period prioritized refreshing		
Indicators	TS LED, CH LED, A/B/Z LED, IN LED, OUT LED 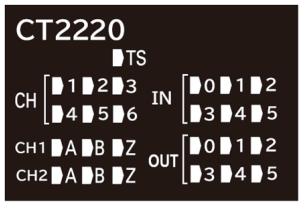 		
Input signals	Counter input terminal: In 2ch Mode: A-phase 2, B-phase 2, Z-phase 2 In 6ch Mode: A-phase 6 External input terminal: 6		
Output signal	External output terminal: 6		
Counter input format	Voltage input (5 V, 24 V)		
Pulse Input Method	In 2ch Mode: Phase differential pulse (multiplication x1/2/4), pulse + direction, up and down pulse inputs In 6ch Mode: Single-phase		
Counter range	-2147483648 to 2147483647		
Counter functions			
Counter Type	Ring counter or linear counter		
Counter controls	Gate control, counter reset, and counter preset		
Latching	In 2ch Mode: Counter Latch 2/ch In 6ch Mode: Counter Latch 1/ch		
Measurements	Pulse rate measurement and pulse period measurement		
Counter Input Specifications (Voltage input)			
Input voltage (24 V)	20.4 to 28.8 VDC (24 VDC +20%/−15%)	**Input voltage (5 V)**	4.5 to 5.5 VDC
ON voltage/ON current (24 V)	18.6 VDC min./3 mA min.	**ON voltage/ON current (5 V)**	4.5 VDC min./3 mA min.
OFF voltage/OFF current (24 V)	4.0 VDC max./1 mA max.	**OFF voltage/OFF current (5 V)**	1.5 VDC max./1 mA max.
Input current (24 V)	5.6 mA typical (24 VDC)	**Input current (5 V)**	5.3 mA typical (5 VDC)
Maximum response frequency	In 2ch Mode: A- and B-phase: Single-phase 250 kHz (phase differential pulse input at multiplication x4: 1 MHz), Z-phase: 250 kHz In 6ch Mode: Single-phase 100 kHz		
Internal I/O common processing	PNP		
I/O power supply method	Supply from the NX Bus		
External power supply output (5 V)*1	Output voltage: 4.9 to 5.25 VDC (5 VDC +5%/-2%) Output current: 500 mA/channel min., 1 A/unit min.		
External Input Specifications			
Input voltage	20.4 to 28.8 VDC (24 VDC +20%/−15%)	**ON voltage/ON current**	15 VDC min./3 mA min.
Input current	3.3 mA typical (24 VDC)	**OFF voltage/OFF current**	5.0 VDC max./1 mA max.

	ON/OFF response time	1 μs max./1 μs max.		
	Internal I/O common processing	PNP		
	I/O power supply method	Supply from the NX Bus		
External Output Specifications				
	Rated voltage	5 to 24 VDC		
	Load voltage range	4.75 to 28.8 VDC	**Residual voltage**	0.6 V max.
	Maximum value of load current	0.5 A/point, 1.8 A/Unit	**Leakage current**	0.1 mA max.
	ON/OFF response time	1 μs max./3 μs max. (at load current 7 to 500 mA)		
	Internal I/O common processing	PNP	**Load Short-circuit Protection**	None
	I/O power supply method	External supply, 4.75 to 28.8 VDC		
	Current consumption from I/O power supply	30 mA max.		
Dimensions		24 (W) × 100 (H) × 71 (D)	**Isolation method**	Photocoupler isolation
Insulation resistance		20 MΩ min. between isolated circuits (at 100 VDC)	**Dielectric strength**	510 VAC between isolated circuits for 1 minute at a leakage current of 5 mA max.
NX Unit power consumption		• Connected to a CPU Unit 1.45 W max. • Connected to Communications Coupler Unit 1.05 W max.	**Current consumption from I/O power supply**	Unit current consumption: 20 mA max. External 5 V power supply consumption: 0.25 x external 5 V power supply current consumption*2
Weight		140 g max.		

Circuit layout	Count input, external input 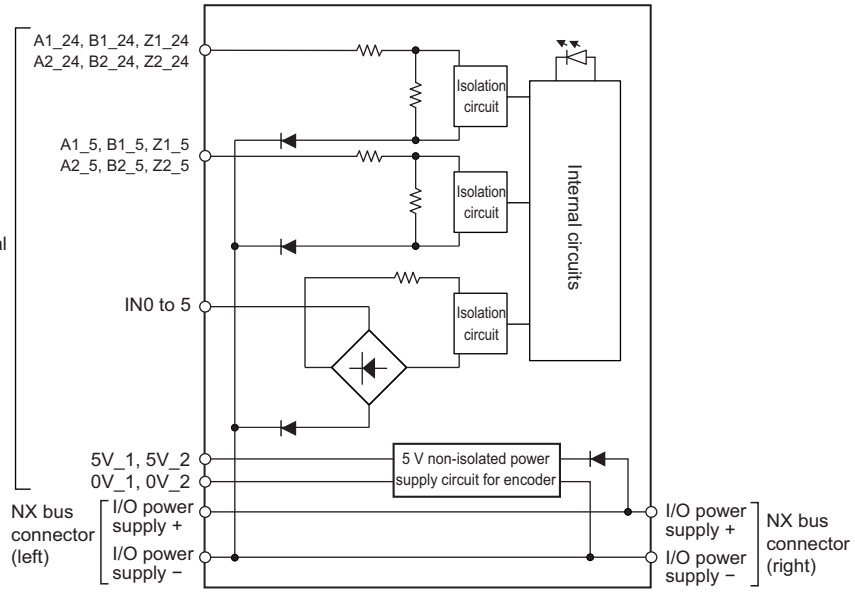 External output 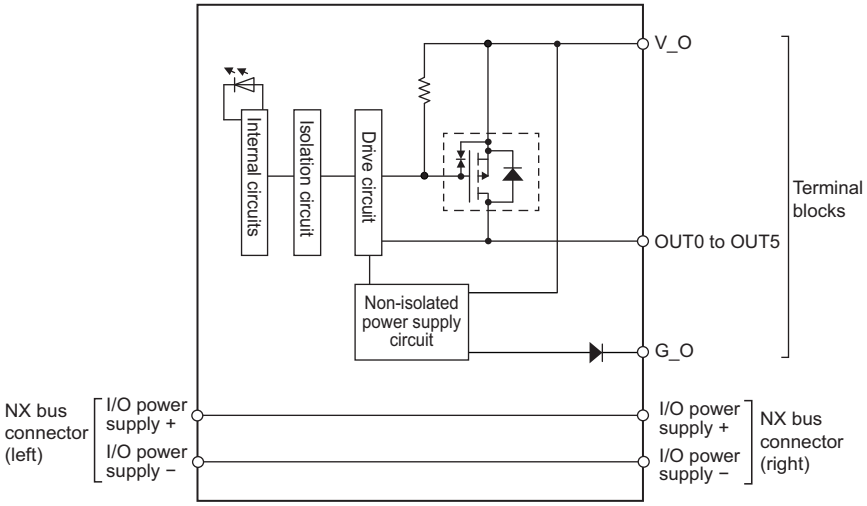
Installation orientation and restrictions	Refer to *A-1-5 Installation Orientation and Restrictions* on page A-23.
Terminal connection diagram	Refer to *4-4 Terminal Block Arrangement and Wiring Example* on page 4-20.

*1. When counter input is input voltage (24 V), external power supply (5 V) cannot be used.

*2. Use this formula to convert 5 V power supply current consumption to 24 V power supply current consumption.

● NX-CT2320

Unit name	High-speed Counter Units	**Model**	NX-CT2320
Number of channels	2ch/6ch switching	**External connection terminals**	Screwless clamping terminal block (16 terminals × 2)
I/O refreshing method	Free-Run refreshing, synchronous I/O refreshing, or task period prioritized refreshing		
Indicators	TS LED, CH LED, A/B/Z LED, IN LED, OUT LED 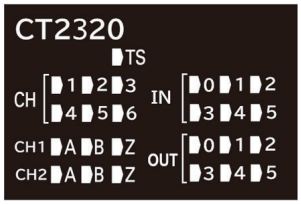 		
Input signals	Counter input terminal: In 2ch Mode: A-phase 2, B-phase 2, Z-phase 2 In 6ch Mode: A-phase 6 External input terminal: 6		
Output signal	External output terminal: 6		
Counter input format	Line receiver input		
Pulse Input Method	In 2ch Mode: Phase differential pulse (multiplication x1/2/4), pulse + direction, up and down pulse inputs In 6ch Mode: Single-phase		
Counter range	-2147483648 to 2147483647		
Counter functions			
Counter Type	Ring counter or linear counter		
Counter controls	Gate control, counter reset, and counter preset		
Latching	In 2ch Mode: Counter Latch 2/ch In 6ch Mode: Counter Latch 1/ch		
Measurements	Pulse rate measurement and pulse period measurement		
Counter Input Specifications (line receiver input)			
Input voltage	EIA standard RS-422-A line driver levels	**High-level input voltage**	V_{IT+}: 0.1 V min.
Input impedance	120 Ω ±5%	**Low-level input voltage**	V_{IT-}: –0.1 V max.
Hysteresis voltage	Vhys (V_{IT+} – V_{IT-}): 60 mV		
Maximum response frequency	In 2ch Mode: A- and B-phase: Single-phase 1 MHz (phase differential pulse input x4: 4 MHz), Z-phase: 1 MHz In 6ch Mode: Single-phase 100 kHz		
External power supply output (5 V)*1	Output voltage: 4.9 to 5.25 VDC (5 VDC +5%/-2%) Output current: 500 mA/channel min., 1 A/unit min.		
External Input Specifications			
Input voltage	20.4 to 28.8 VDC (24 VDC +20%/−15%)	**ON voltage/ON current**	15 VDC min./3 mA min.
Input current	3.3 mA typical (24 VDC)	**OFF voltage/OFF current**	5.0 VDC max./1 mA max.
ON/OFF response time	1 μs max./1 μs max.		
Internal I/O common processing	NPN		
I/O power supply method	Supply from the NX Bus		

External Output Specifications			
Rated voltage	5 to 24 VDC		
Load voltage range	4.75 to 28.8 VDC	**Residual voltage**	0.6 V max.
Maximum value of load current	0.5 A/point, 1.8 A/Unit	**Leakage current**	0.1 mA max.
ON/OFF response time	1 μs max./3 μs max. (at load current 7 to 500 mA)		
Internal I/O common processing	NPN	**Load Short-circuit Protection**	None
I/O power supply method	External supply, 4.75 to 28.8 VDC		
Current consumption from I/O power supply	20 mA max		
Dimensions	24 (W) × 100 (H) × 71 (D)	**Isolation method**	Photocoupler isolation
Insulation resistance	20 MΩ min. between isolated circuits (at 100 VDC)	**Dielectric strength**	510 VAC between isolated circuits for 1 minute at a leakage current of 5 mA max.
NX Unit power consumption	• Connected to a CPU Unit 1.45 W max. • Connected to Communications Coupler Unit 1.1 W max.	**Current consumption from I/O power supply**	Unit current consumption: 30 mA max. External 5 V power supply consumption: 0.25 x external 5 V power supply current consumption*2
Weight	140 g max.		

Circuit layout	Count input, external input 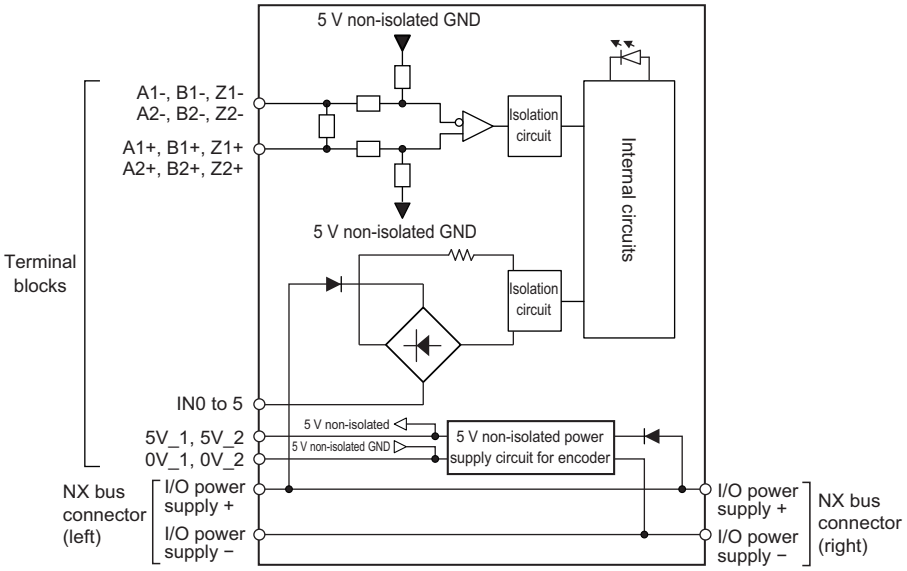 External output 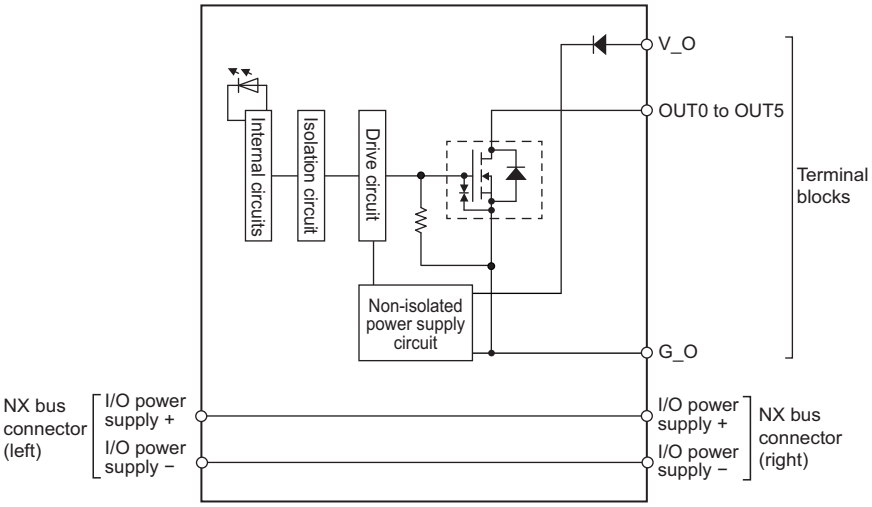
Installation orientation and restrictions	Refer to *A-1-5 Installation Orientation and Restrictions* on page A-23.
Terminal connection diagram	Refer to *4-4 Terminal Block Arrangement and Wiring Example* on page 4-20.

*1. External power supply (5 V) may be unavailable due to installation orientation or ambient operating temperature. Refer to *A-1-5 Installation Orientation and Restrictions* on page A-23 for details.

*2. Use this formula to convert 5 V power supply current consumption to 24 V power supply current consumption.

● NX-CT2420

Unit name	High-speed Counter Units	**Model**	NX-CT2420
Number of channels	2ch/6ch switching	**External connection terminals**	Screwless clamping terminal block (16 terminals × 2)
I/O refreshing method	Free-Run refreshing, synchronous I/O refreshing, or task period prioritized refreshing		
Indicators	TS LED, CH LED, A/B/Z LED, IN LED, OUT LED 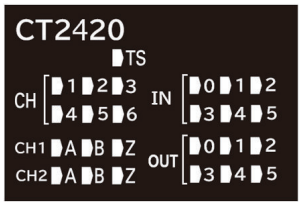 		
Input signals	Counter input terminal: In 2ch Mode: A-phase 2, B-phase 2, Z-phase 2 In 6ch Mode: A-phase 6 External input terminal: 6		
Output signal	External output terminal: 6		
Counter input format	Line receiver input		
Pulse Input Method	In 2ch Mode: Phase differential pulse (multiplication x1/2/4), pulse + direction, up and down pulse inputs In 6ch Mode: Single-phase		
Counter range	-2147483648 to 2147483647		
Counter functions			
Counter Type	Ring counter or linear counter		
Counter controls	Gate control, counter reset, and counter preset		
Latching	In 2ch Mode: Counter Latch 2/ch In 6ch Mode: Counter Latch 1/ch		
Measurements	Pulse rate measurement and pulse period measurement		
Counter Input Specifications (line receiver input)			
Input voltage	EIA standard RS-422-A line driver levels	**High-level input voltage**	V_{IT+}: 0.1 V min.
Input impedance	120 Ω ±5%	**Low-level input voltage**	V_{IT-}: –0.1 V max.
Hysteresis voltage	Vhys ($V_{IT+} - V_{IT-}$): 60 mV		
Maximum response frequency	In 2ch Mode: A- and B-phase: Single-phase 1 MHz (phase differential pulse input x4: 4 MHz), Z-phase: 1 MHz In 6ch Mode: Single-phase 100 kHz		
External power supply output (5 V)*1	Output voltage: 4.9 to 5.25 VDC (5 VDC +5%/-2%) Output current: 500 mA/channel min., 1 A/unit min.		
External Input Specifications			
Input voltage	20.4 to 28.8 VDC (24 VDC +20%/−15%)	**ON voltage/ON current**	15 VDC min./3 mA min.
Input current	3.3 mA typical (24 VDC)	**OFF voltage/OFF current**	5.0 VDC max./1 mA max.
ON/OFF response time	1 μs max./1 μs max.		
Internal I/O common processing	PNP		

	I/O power supply method	Supply from the NX Bus	
External Output Specifications			
	Rated voltage	5 to 24 VDC	
	Load voltage range	4.75 to 28.8 VDC	**Residual voltage** 0.6 V max.
	Maximum value of load current	0.5 A/point, 1.8 A/Unit	**Leakage current** 0.1 mA max.
	ON/OFF response time	1 μs max./3 μs max. (at load current 7 to 500 mA)	
	Internal I/O common processing	PNP	**Load Short-circuit Protection** None
	I/O power supply method	External supply, 4.75 to 28.8 VDC	
	Current consumption from I/O power supply	30 mA max.	
Dimensions		24 (W) × 100 (H) × 71 (D)	**Isolation method** Photocoupler isolation
Insulation resistance		20 MΩ min. between isolated circuits (at 100 VDC)	**Dielectric strength** 510 VAC between isolated circuits for 1 minute at a leakage current of 5 mA max.
NX Unit power consumption		• Connected to a CPU Unit 1.45 W max. • Connected to Communications Coupler Unit 1.05 W max.	**Current consumption from I/O power supply** Unit current consumption: 30 mA max. External 5 V power supply consumption: 0.25 x external 5 V power supply current consumption*2
Weight		140 g max.	

Circuit layout	Count input, external input 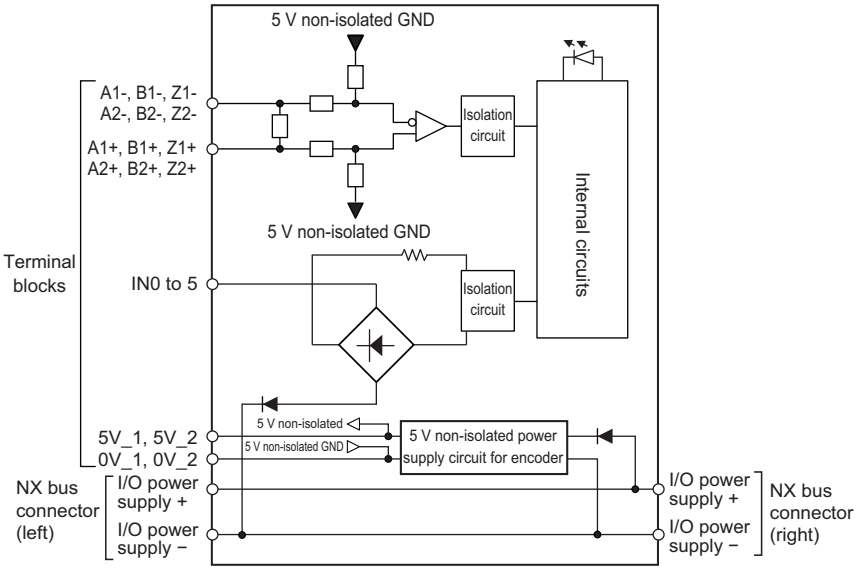 External output 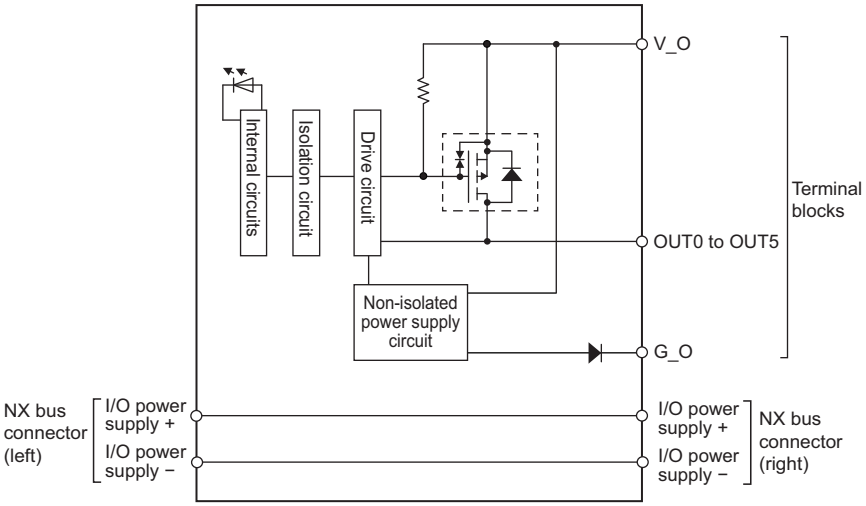
Installation orientation and restrictions	Refer to *A-1-5 Installation Orientation and Restrictions* on page A-23.
Terminal connection diagram	Refer to *4-4 Terminal Block Arrangement and Wiring Example* on page 4-20.

*1. External power supply (5 V) may be unavailable due to installation orientation or ambient operating temperature. Refer to *A-1-5 Installation Orientation and Restrictions* on page A-23 for details.

*2. Use this formula to convert 5 V power supply current consumption to 24 V power supply current consumption.

A-1-3 Counter Input Timing Specifications

There are two types of counter input: voltage input and line receiver input. The pulse input timing specifications for each type of pulse inputs are given below.

Counter Input Timing Specifications for Voltage Input

The following figures show the counter input timing specifications for Units with voltage input (NX-CT2120/-CT2220).

● In 2ch Mode

Counter Input (Phases A and B)
Input pulse duty = 50%

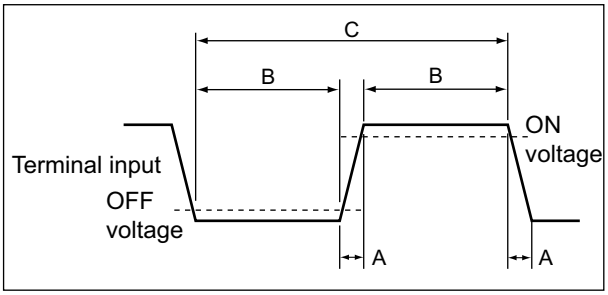

Counter Input Phase Z

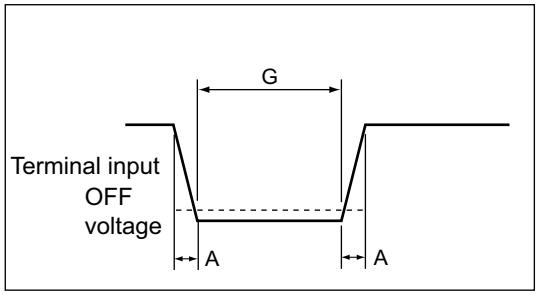

Relationship between Phase A and Phase B on Phase Differential Pulse Inputs

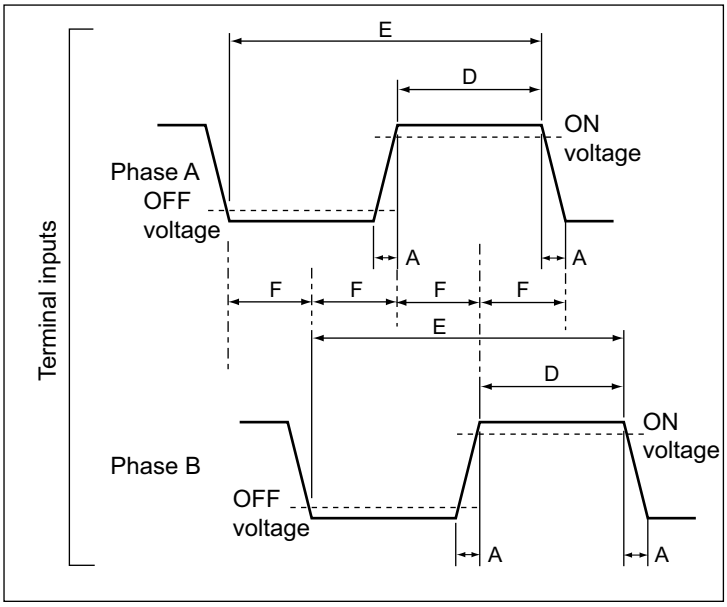

Timing conditions (at 250 kHz input)						
A	B	C	D	E	F	G
< 1 μs	> 2 μs	> 4 μs	> 2 μs	> 4 μs	> 1 μs	> 2 μs

Counter Noise Filter: (at 1: 250 kHz setting)

● In 6ch Mode

Counter Input (Phases A)
Input pulse duty = 50%

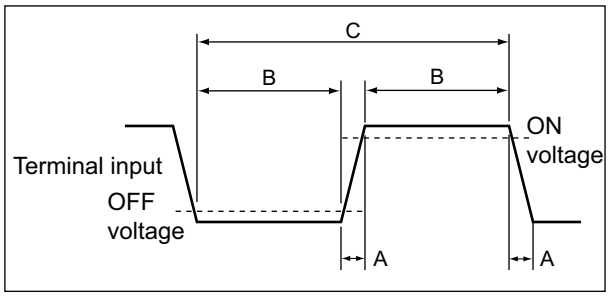

Timing conditions (at 100 kHz input)		
A	B	C
< 1 μs	> 5 μs	> 10 μs

Counter Noise Filter: (at 0: 100 kHz setting)

Counter Input Timing Specifications for Line Receiver Inputs

The following figures show the counter input timing specifications for Units with line receiver input (NX-CT2320/-CT2420).

● In 2ch Mode

Counter Input (Phases A and B)
Input pulse duty = 50%

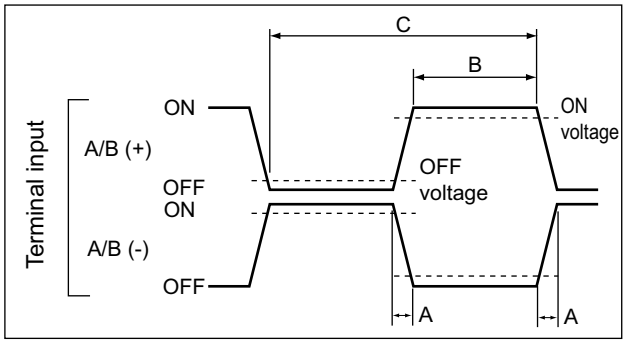

Counter Input Phase Z

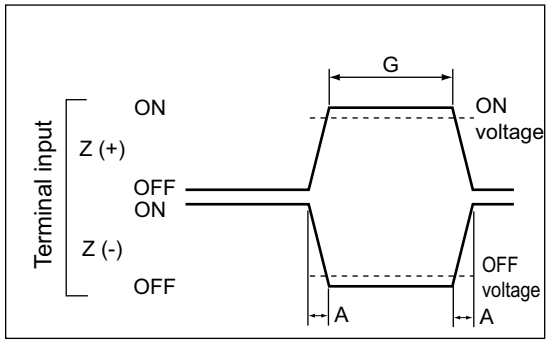

Relationship between Phase A and Phase B on Phase Differential Pulse Inputs

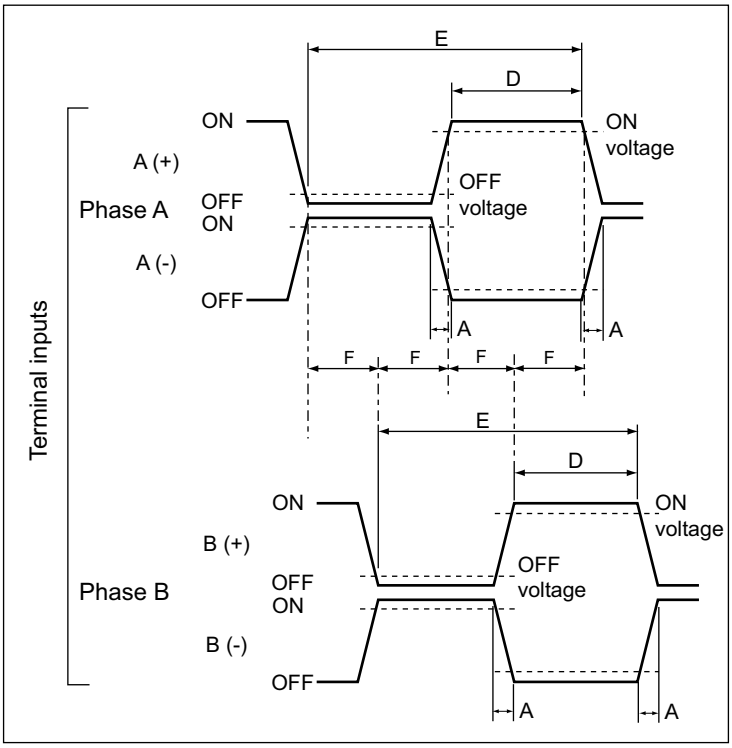

Timing conditions (at 1 MHz input)						
A	B	C	D	E	F	G
< 0.1 μs	> 0.5 μs	> 1 μs	> 0.5 μs	> 1 μs	> 0.25 μs	> 0.5 μs

Counter Noise Filter: (at 0: 1 MHz setting)

● In 6ch Mode

Counter Input (Phases A)
Input pulse duty = 50%

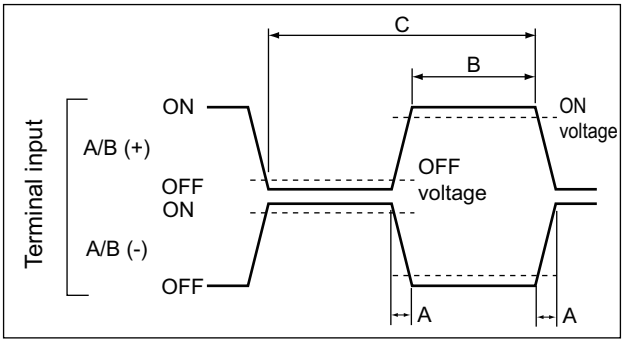

Timing conditions (at 100 kHz input)		
A	B	C
< 1 μs	> 5 μs	> 10 μs

Counter Noise Filter: (at 0: 100 kHz setting)

Precautions for Correct Use

To satisfy the specifications for counter input, the type of output drive from the encoder that you use, the encoder cable length, and the count pulse frequency must all be taken into consideration.

A-1-4 PWM Output Timing Specifications

PWM external output includes the NPN (NX-CT2120/CT2320) and PNP (NX-CT2220/CT2420) types. The PWM output specifications for each type of pulse input are given below.

NPN Type (NX-CT2120/CT2320) PWM Output Specifications

The external output NPN type (NX-CT2120/CT2320) PWM output specifications are shown below.

Item	Description
Maximum frequency	32800 Hz
ON duty	0.0% to 100.0%
Output waveform	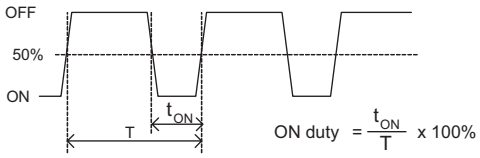
PWM output accuracy (at ON pulse width 2 μs or above)	ON duty: -0.2% to +1% at 6.5535 kHz -1% to +5% at 32.8 kHz (at load current 30 to 500 mA)

PNP Type (NX-CT2220/CT2420) PWM Output Specifications

The external output PNP type (NX-CT2220/CT2420) PWM output specifications are shown below.

Item	Description
Maximum frequency	32800 Hz
ON duty	0.0% to 100.0%
Output waveform	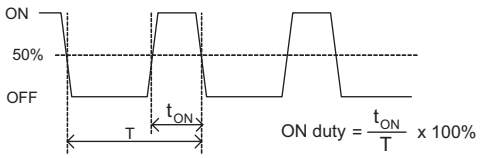
PWM output accuracy (at ON pulse width 2 μs or above)	ON duty: ±0.5% at up to 6.5535 kHz ±2.5% at up to 32.8 kHz (at load current 30 to 500 mA)

A-1-5 Installation Orientation and Restrictions

Front mounting only when a CPU Unit is connected.
When a Communications Coupler Unit is connected, mounting is possible in the following 6 directions.
(A) is the front installation orientation.

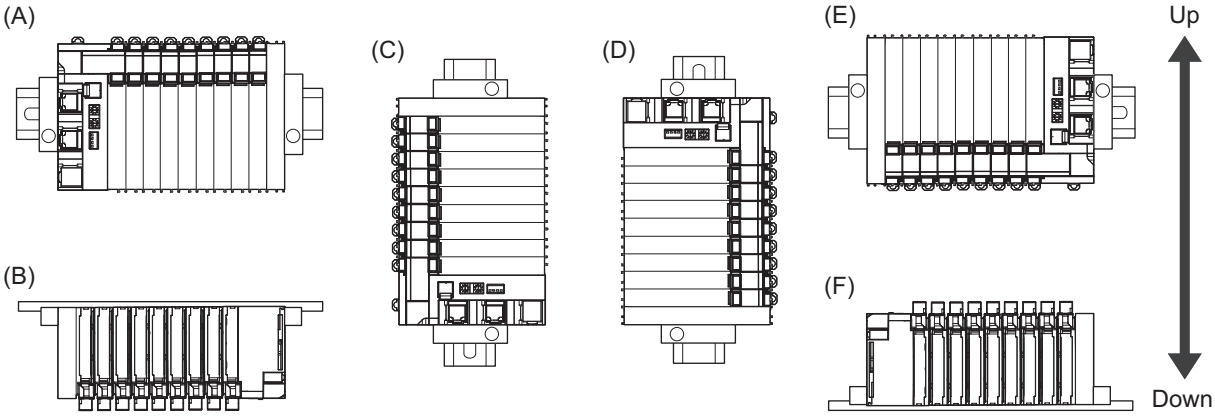

Details on installation orientation and restrictions for each model are below.

NX-CT2120/CT2220

With CPU Unit connection

Ambient operating temperature Ta (°C)	Ta ≤ 50	Ta > 50	
I/O power supply voltage IOV (Supplied from NX bus)	Full range	IOV ≤ 24 V	IOV > 24 V
Number of simultaneously ON external input points	Can be used without restrictions.	Can be used without restrictions.	4 or fewer

When connected to Communications Coupler Unit

Mounting orientation	(A)	(B), (E), (F)			(C), (D)	
Ambient operating temperature Ta (°C)	Full range	Ta ≤ 50	Ta > 50		Ta ≤ 50	Ta > 50
I/O power supply voltage IOV (Supplied from NX bus)	Full range	Full range	IOV ≤ 24 V	IOV > 24 V	Full range	Full range
Number of simultaneously ON external input points	Can be used without restrictions.	Can be used without restrictions.	Can be used without restrictions.	4 or fewer	Can be used without restrictions.	Cannot be used*1

*1. Under these conditions, the High-speed Counter Unit cannot be used.

NX-CT2320/CT2420

With CPU Unit connection

Ambient operating temperature Ta (°C)	Ta ≤ 45	45 < Ta ≤ 50	Ta > 50	
I/O power supply voltage IOV (Supplied from NX bus)	Full range	Full range	IOV ≤ 24 V	IOV > 24 V
Number of simultaneously ON external input points	Can be used without restrictions.	4 or fewer	2 or fewer	1 or fewer
Number of simultaneously ON external output points		4 or fewer	2 or fewer	1 or fewer
Available counter input		Can be used without restrictions.	1 channel only*1	1 channel only*1
External power supply output (5 V)		Cannot be used*2	Cannot be used*2	Cannot be used*2

*1. In 2ch mode, only Ch1 is usable. In 6ch mode, only Ch1 to 3 are usable.

*2. External power supply output (5 V) cannot be used. When encoder power supply is required, add an external power supply for encoder as shown below.

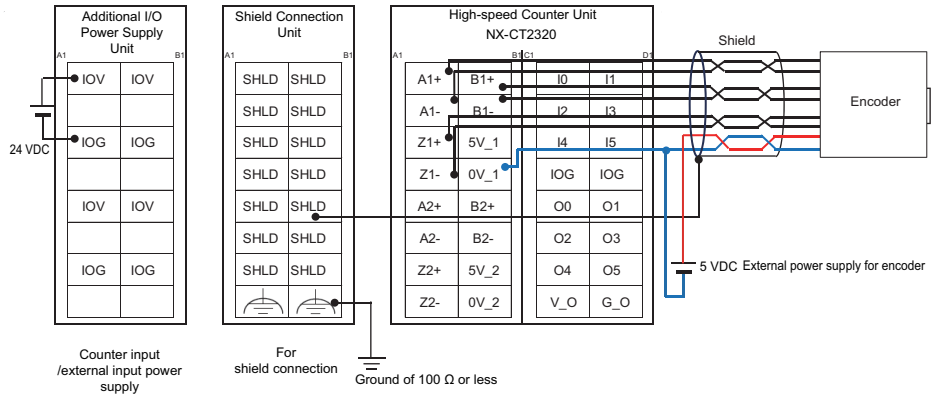

When connected to Communications Coupler Unit

Mounting orientation	(A)		(B), (E), (F)				(C), (D)			
Ambient operating temperature Ta (°C)	Ta ≤ 50	Ta > 50	Ta ≤ 45	45 < Ta ≤ 50	Ta > 50		Ta ≤ 40	40 < Ta ≤ 45		Ta > 45
I/O power supply voltage IOV (Supplied from NX bus)	Full range	Full range	Full range	Full range	IOV ≤ 24 V	IOV > 24 V	Full range	IOV ≤ 24 V	IOV > 24 V	Full range
Number of simultaneously ON external input points	Can be used without restrictions.	Can be used without restrictions.	Can be used without restrictions.	4 or fewer	2 or fewer	1 or fewer	Can be used without restrictions.	Can be used without restrictions.	2 or fewer	Cannot be used*3
Number of simultaneously ON external output points				4 or fewer	2 or fewer	1 or fewer			2 or fewer	
Available counter input				Can be used without restrictions.	1 channel only*1	1 channel only*1			Can be used without restrictions.	
External power supply output (5 V)		Cannot be used*2		Cannot be used*2	Cannot be used*2	Cannot be used*2		Cannot be used*2	Cannot be used*2	

*1. In 2ch mode, only Ch1 is usable. In 6ch mode, only Ch1 to 3 are usable.

*2. External power supply output (5 V) cannot be used. When encoder power supply is required, add an external power supply for encoder as shown below.

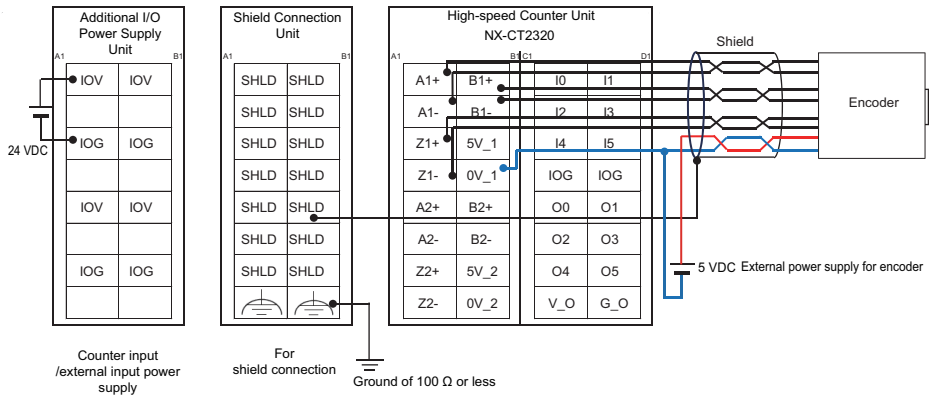

*3. Under these conditions, the High-speed Counter Unit cannot be used.

A-2 Dimensions

24 mm Width

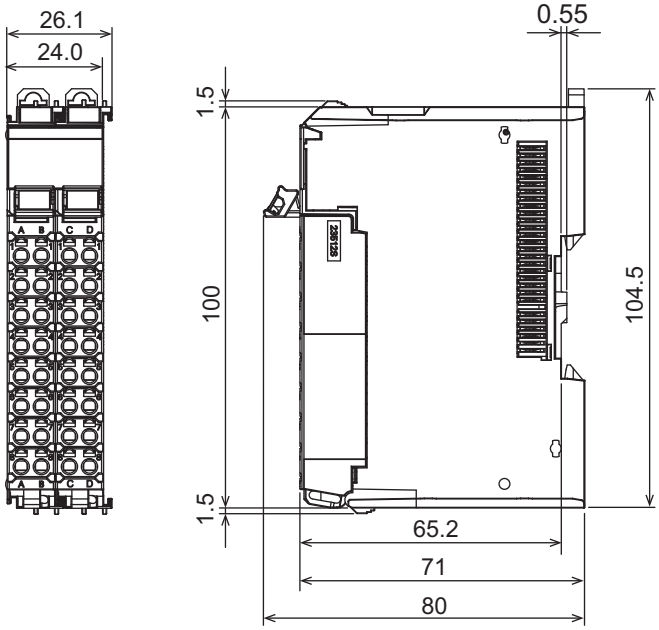

Installation Height

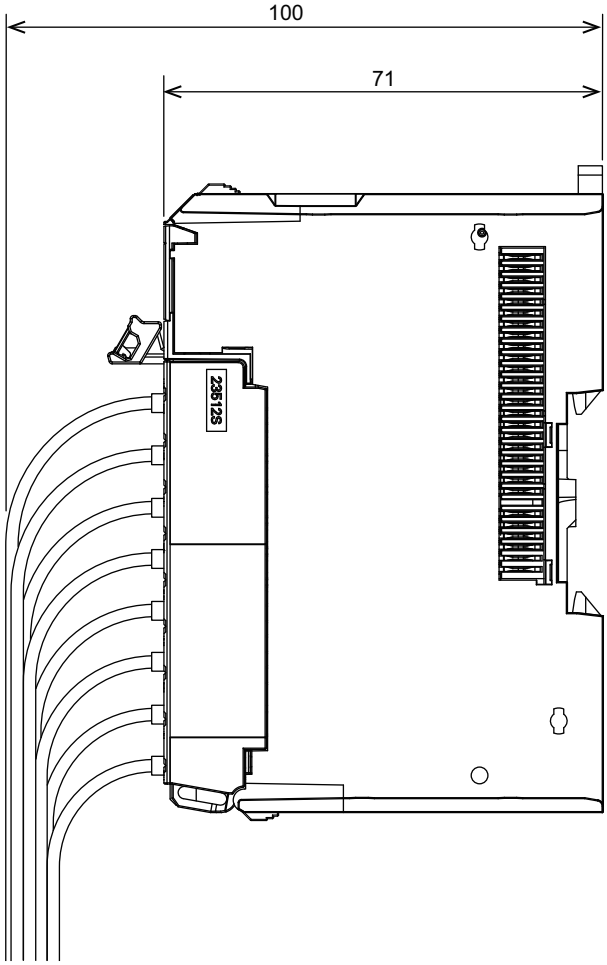

(Unit: mm)

A-3 List of NX Objects

This section explains the NX objects of the High-speed Counter Units.

The method to access NX objects through instructions or other messages depends on where the NX Unit is connected.
If the NX Unit is connected to a CPU Unit, access is possible with the Read NX Unit Object instruction and the Write NX Unit Object instruction.
When the NX Unit is connected to a Communications Coupler Unit, the method depends on the connected communications master and Communications Coupler Unit.
Refer to the user's manual for the connected Communications Coupler Unit for method to use messages to access NX objects on Slave Terminals.

A-3-1 Format of NX Object Descriptions

In this manual, NX objects are described with the following format.

Index (hex)	Subindex (hex)	Object name	Default value	Data range	Unit	Data type	Access	I/O allocation	Data attribute

Index (hex)	:	This is the index of the NX object that is expressed as a four-digit hexadecimal number.
Subindex (hex)	:	This is the subindex of the NX object that is expressed as a two-digit hexadecimal number.
Object name	:	This is the name of the object. For a subindex, this is the name of the subindex.
Default value	:	This is the value that is set by default.
Data range	:	For a read-only (RO) NX object, this is the range of the data you can read. For a read-write (RW) NX object, this is the setting range of the data.
Unit	:	The unit is the physical units.
Data type	:	This is the data type of the object.
Access	:	This data tells if the object is read-only or read/write. RO: Read only RW: Read/write
I/O allocation	:	This tells whether I/O allocation is allowed.
Data attribute	:	This is the timing when changes to writable NX objects are enabled. Y: Enabled by restarting N: Enabled at all times ---: Write-prohibited

A-3-2 Unit Information Objects

The following objects are related to the product information.

Index (hex)	Subindex (hex)	Object name	Default value	Data range	Unit	Data type	Access	I/O allocation	Data attribute
1000	---	NX Bus Identity	---	---	---	---	---	---	---
	00	Number of Entries	7	7	---	USINT	RO	Not possible	---
	02	Model	*1	---	---	ARRAY[0..11] OF BYTE	RO	Not possible	---
	03	Device Type	*2	---	---	UDINT	RO	Not possible	---
	04	Product Code	*3	---	---	UDINT	RO	Not possible	---
	05	Vendor Code	00000001Hex*4	---	---	UDINT	RO	Not possible	---
	06	Unit Version	*5	---	---	UDINT	RO	Not possible	---
	07	Serial Number	*6	00000000 to FFFFFFFF hex	---	UDINT	RO	Not possible	---
1001	---	Production Info	---	---	---	---	---	---	---
	00	Number of Entries	4	4	---	USINT	RO	Not possible	---
	01	Lot Number	*7	00000000 to FFFFFFFF hex	---	UDINT	RO	Not possible	---
	02	Hardware Version	*8	---	---	ARRAY[0..19] OF BYTE	RO	Not possible	---
	03	Software Version	*8	---	---	ARRAY[0..19] OF BYTE	RO	Not possible	---

*1. Product models are assigned in ascending order from the lowest number of array elements. Any remainder elements are filled with spaces.
*2. The device types are assigned for each product Unit type.
Bits 0 to 31: Device type
*3. The product codes are assigned for each product model.
Bits 0 to 31: Product code
*4. OMRON vendor code.
*5. Bits 24 to 31: Integer part of the unit version
Bits 16 to 23: Fractional part of the unit version
Bits 0 to 15: Reserved
(Example) For version 1.0: 0100□□□□ hex
*6. A unique serial number is assigned for each product unit.
Bits 0 to 31: Serial number
*7. The year, month, and day of production are assigned to the “lot number”.
Bits 24 to 31: Date of production
Bits 16 to 23: Month of production
Bits 8 to 15: Year of production
Bits 0 to 7: Reserved

*8. Version numbers are assigned in ascending order from the earliest number of array elements. Any remainder elements are filled with spaces.

A-3-3 Objects That Accept I/O Allocations

These objects accept I/O allocations.
You cannot access the objects that are described below with the Read NX Unit Object instruction, Write NX Unit Object instruction, or other messages.

Index (hex)	Subindex (hex)	Object name	Default value	Data range	Unit	Data type	Access	I/O allocation	Data attribute
6000	---	Counter Status	---	---	---	---	---	---	---
	00	Number of Entries	2	2 to 6	---	USINT	RO	Not possible	---
	01	Ch1 Counter Status*1	00000000 hex	00000000 to FFFFFFFF hex	---	DWORD	RO	Possible	---
	02	Ch2 Counter Status*1	00000000 hex	00000000 to FFFFFFFF hex	---	DWORD	RO	Possible	---
	03	Ch3 Counter Status*2	0000 hex	0000 to FFFF hex	---	WORD	RO	Possible	---
	04	Ch4 Counter Status*2	0000 hex	0000 to FFFF hex	---	WORD	RO	Possible	---
	05	Ch5 Counter Status*2	0000 hex	0000 to FFFF hex	---	WORD	RO	Possible	---
	06	Ch6 Counter Status*2	0000 hex	0000 to FFFF hex	---	WORD	RO	Possible	---

*1. Aggregated counter status data for Ch1 to 2. Refer to *Ch1 to 2 Counter Status* on page 6-12 for details on Ch1 to 2 counter status.
*2. Aggregated counter status data for Ch3 to 6. Refer to *Ch3 to 6 Counter Status* on page 6-13 for details on Ch3 to 6 counter status.

Index (hex)	Subindex (hex)	Object name	Default value	Data range	Unit	Data type	Access	I/O allocation	Data attribute
6001	---	External Input Status	---	---	---	---	---	---	---
	00	Number of Entries	1	1	---	USINT	RO	Not possible	---
	01	External Input Status*1	0000 hex	0000 to 003F hex	---	WORD	RO	Possible	---

*1. Aggregated external input status data. Refer to *External Input Status* on page 6-15 for more information on external input status.

Index (hex)	Subindex (hex)	Object name	Default value	Data range	Unit	Data type	Access	I/O allocation	Data attribute
6002	---	Present Counter Value	---	---	---	---	---	---	---
	00	Number of Entries	2	2 to 6	---	USINT	RO	Not possible	---
	01	Ch1 Present Counter Value	0	-2147483648 to 2147483647	---	DINT	RO	Possible	---
	02	Ch2 Present Counter Value	0	-2147483648 to 2147483647	---	DINT	RO	Possible	---
	03	Ch3 Present Counter Value	0	-2147483648 to 2147483647	---	DINT	RO	Possible	---
	04	Ch4 Present Counter Value	0	-2147483648 to 2147483647	---	DINT	RO	Possible	---
	05	Ch5 Present Counter Value	0	-2147483648 to 2147483647	---	DINT	RO	Possible	---
	06	Ch6 Present Counter Value	0	-2147483648 to 2147483647	---	DINT	RO	Possible	---

Index (hex)	Subindex (hex)	Object name	Default value	Data range	Unit	Data type	Access	I/O allocation	Data attribute
6003	---	Pulse Rate	---	---	---	---	---	---	---
	00	Number of Entries	2	2 to 6	---	USINT	RO	Not possible	---
	01	Ch1 Pulse Rate	0	-2147483648 to 2147483647	---	DINT	RO	Possible	---
	02	Ch2 Pulse Rate	0	-2147483648 to 2147483647	---	DINT	RO	Possible	---
	03	Ch3 Pulse Rate	0	-2147483648 to 2147483647	---	DINT	RO	Possible	---
	04	Ch4 Pulse Rate	0	-2147483648 to 2147483647	---	DINT	RO	Possible	---
	05	Ch5 Pulse Rate	0	-2147483648 to 2147483647	---	DINT	RO	Possible	---
	06	Ch6 Pulse Rate	0	-2147483648 to 2147483647	---	DINT	RO	Possible	---

Index (hex)	Subindex (hex)	Object name	Default value	Data range	Unit	Data type	Access	I/O allocation	Data attribute
6004	---	Latch1 Count Data	---	---	---	---	---	---	---
	00	Number of Entries	2	2 to 6	---	USINT	RO	Not possible	---
	01	Ch1 Latch1 Count Data	0	-2147483648 to 2147483647	---	DINT	RO	Possible	---
	02	Ch2 Latch1 Count Data	0	-2147483648 to 2147483647	---	DINT	RO	Possible	---
	03	Ch3 Latch1 Count Data	0	-2147483648 to 2147483647	---	DINT	RO	Possible	---
	04	Ch4 Latch1 Count Data	0	-2147483648 to 2147483647	---	DINT	RO	Possible	---
	05	Ch5 Latch1 Count Data	0	-2147483648 to 2147483647	---	DINT	RO	Possible	---
	06	Ch6 Latch1 Count Data	0	-2147483648 to 2147483647	---	DINT	RO	Possible	---

Index (hex)	Subindex (hex)	Object name	Default value	Data range	Unit	Data type	Access	I/O allocation	Data attribute
6005	---	Latch2 Count Data	---	---	---	---	---	---	---
	00	Number of Entries	2	2	---	USINT	RO	Not possible	---
	01	Ch1 Latch2 Count Data	0	-2147483648 to 2147483647	---	DINT	RO	Possible	---
	02	Ch2 Latch2 Count Data	0	-2147483648 to 2147483647	---	DINT	RO	Possible	---

Index (hex)	Subindex (hex)	Object name	Default value	Data range	Unit	Data type	Access	I/O allocation	Data attribute
6006	---	Counter Log Status	---	---	---	---	---	---	---
	00	Number of Entries	1	1	---	USINT	RO	Not possible	---
	01	Counter Log Status*1	0000 hex	0000 to 000F hex	---	WORD	RO	Possible	---

*1. Aggregated counter log status data. Refer to *Ch1 Counter Log Status* on page 6-15 for details on counter log status.

Index (hex)	Subindex (hex)	Object name	Default value	Data range	Unit	Data type	Access	I/O allocation	Data attribute
6007	---	Counter Log Valid Data Number	---	---	---	---	---	---	---
	00	Number of Entries	1	1	---	USINT	RO	Not possible	---
	01	Counter Log Valid Data Number	0	0 to 16	---	UINT	RO	Possible	---

Index (hex)	Subindex (hex)	Object name	Default value	Data range	Unit	Data type	Access	I/O allocation	Data attribute
6008	---	Ch1 Counter Log Data	---	---	---	---	---	---	---
	00	Number of Entries	4	0 to 4	---	USINT	RO	Not possible	---
	01	Ch1 Counter Log Data1	0	-2147483648 to 2147483647	---	DINT	RO	Possible	---
	02	Ch1 Counter Log Data2	0	-2147483648 to 2147483647	---	DINT	RO	Possible	---
	03	Ch1 Counter Log Data3	0	-2147483648 to 2147483647	---	DINT	RO	Possible	---
	04	Ch1 Counter Log Data4	0	-2147483648 to 2147483647	---	DINT	RO	Possible	---
	05	Ch1 Counter Log Data5	0	-2147483648 to 2147483647	---	DINT	RO	Possible	---
	06	Ch1 Counter Log Data6	0	-2147483648 to 2147483647	---	DINT	RO	Possible	---
	07	Ch1 Counter Log Data7	0	-2147483648 to 2147483647	---	DINT	RO	Possible	---
	08	Ch1 Counter Log Data8	0	-2147483648 to 2147483647	---	DINT	RO	Possible	---
	09	Ch1 Counter Log Data9	0	-2147483648 to 2147483647	---	DINT	RO	Possible	---
	10	Ch1 Counter Log Data10	0	-2147483648 to 2147483647	---	DINT	RO	Possible	---
	11	Ch1 Counter Log Data11	0	-2147483648 to 2147483647	---	DINT	RO	Possible	---

Index (hex)	Subindex (hex)	Object name	Default value	Data range	Unit	Data type	Access	I/O allocation	Data attribute
6008	12	Ch1 Counter Log Data12	0	-2147483648 to 2147483647	---	DINT	RO	Possible	---
	13	Ch1 Counter Log Data13	0	-2147483648 to 2147483647	---	DINT	RO	Possible	---
	14	Ch1 Counter Log Data14	0	-2147483648 to 2147483647	---	DINT	RO	Possible	---
	15	Ch1 Counter Log Data15	0	-2147483648 to 2147483647	---	DINT	RO	Possible	---
	16	Ch1 Counter Log Data16	0	-2147483648 to 2147483647	---	DINT	RO	Possible	---

Index (hex)	Subindex (hex)	Object name	Default value	Data range	Unit	Data type	Access	I/O allocation	Data attribute
6009	---	Pulse Period Measured Value	---	---	---	---	---	---	---
	00	Number of Entries	2	2	---	USINT	RO	Not possible	---
	01	Ch1 Pulse Period Measured Value	0	0 to 4294967295	100 ns	UDINT	RO	Possible	---
	02	Ch2 Pulse Period Measured Value	0	0 to 4294967295	100 ns	UDINT	RO	Possible	---

Index (hex)	Subindex (hex)	Object name	Default value	Data range	Unit	Data type	Access	I/O allocation	Data attribute
600C	---	Comparison Setting Status	---	---	---	---	---	---	---
	00	Number of Entries	1	1	---	USINT	RO	Not possible	---
	01	Comparison Setting Status*1	0000 hex	0000 to 0007 hex	---	WORD	RO	Possible	---

*1. Aggregated comparison setting status data. Refer to *Comparison Setting Status* on page 6-16 for details on comparison setting status.

Index (hex)	Subindex (hex)	Object name	Default value	Data range	Unit	Data type	Access	I/O allocation	Data attribute
600D	---	Output Pattern of Range Comparison Read Data	---	---	---	---	---	---	---
	00	Number of Entries	2	2	---	USINT	RO	Not possible	---
	01	Lower Limit Value of Range Comparison Read Data	0	-2147483648 to 2147483647	---	DINT	RO	Possible	---
	02	Upper Limit Value of Range Comparison Read Data	0	-2147483648 to 2147483647	---	DINT	RO	Possible	---

Index (hex)	Subindex (hex)	Object name	Default value	Data range	Unit	Data type	Access	I/O allocation	Data attribute
600F	---	Output Pattern of Range Comparison Read Data	---	---	---	---	---	---	---
	00	Number of Entries	1	1	---	USINT	RO	Not possible	---
	01	Output Pattern of Range Comparison Read Data*1	0000 hex	0000 to 003F hex	---	WORD	RO	Possible	---

*1. Aggregated data for Output Pattern of Range Comparison Read Data. Refer to *Output Pattern of Range Comparison Read Data* on page 6-21 for details on Output Pattern of Range Comparison Read Data.

Index (hex)	Subindex (hex)	Object name	Default value	Data range	Unit	Data type	Access	I/O allocation	Data attribute
6011	---	Target Value of Target Comparison Read Data	---	---	---	---	---	---	---
	00	Number of Entries	1	1	---	USINT	RO	Not possible	---
	01	Target Value of Target Comparison Read Data	0	-2147483648 to 2147483647	---	DINT	RO	Possible	---

Index (hex)	Subindex (hex)	Object name	Default value	Data range	Unit	Data type	Access	I/O allocation	Data attribute
6012	---	Advance Time of Target Comparison Read Data	---	---	---	---	---	---	---
	00	Number of Entries	1	1	---	USINT	RO	Not possible	---
	01	Advance Time of Target Comparison Read Data	0	0 to 65535	μs	UINT	RO	Possible	---

Index (hex)	Subindex (hex)	Object name	Default value	Data range	Unit	Data type	Access	I/O allocation	Data attribute
6013	---	Crossing Output Pattern of Target Comparison Read Data	---	---	---	---	---	---	---
	00	Number of Entries	2	2	---	USINT	RO	Not possible	---
	01	pCV Crossing Output Pattern of Target Comparison Read Data*1	0000 hex	0000 to FFFF hex	---	WORD	RO	Possible	---
	02	mCV Crossing Output Pattern of Target Comparison Read Data*2	0000 hex	0000 to FFFF hex	---	WORD	RO	Possible	---

*1. Aggregated data for pCV Crossing Output Pattern of Target Comparison Read Data. Refer to *pCV Crossing Output Pattern of Target Comparison Read Data* on page 6-17 for details on pCV Crossing Output Pattern of Target Comparison Read Data.

*2. Aggregated data for mCV Crossing Output Pattern of Target Comparison Read Data. Refer to *mCV Crossing Output Pattern of Target Comparison Read Data* on page 6-18 for details on mCV Crossing Output Pattern of Target Comparison Read Data.

Index (hex)	Subindex (hex)	Object name	Default value	Data range	Unit	Data type	Access	I/O allocation	Data attribute
6014	---	External Output Status	---	---	---	---	---	---	---
	00	Number of Entries	1	1	---	USINT	RO	Not possible	---
	01	External Output Status*1	0000 hex	0000 to 003F hex	---	WORD	RO	Possible	---

*1. Aggregated external output status data. Refer to *External Output Status* on page 6-23 for more information on external output status.

Index (hex)	Subindex (hex)	Object name	Default value	Data range	Unit	Data type	Access	I/O allocation	Data attribute
6016	---	PWM Status	---	---	---	---	---	---	---
	00	Number of Entries	1	1	---	USINT	RO	Not possible	---
	01	PWM Status*1	0000 hex	0000 to 001F hex	---	WORD	RO	Possible	---

*1. Aggregated PWM Status data. Refer to *External Output0 PWM Status* on page 6-22 for more information on PWM status.

Index (hex)	Subindex (hex)	Object name	Default value	Data range	Unit	Data type	Access	I/O allocation	Data attribute
6018	---	Time Stamp	---	---	---	---	---	---	---
	00	Number of Entries	2	2	---	USINT	RO	Not possible	---
	01	Ch1 Time Stamp	0	0000000000000000 to FFFFFFFFFFFFFFFF hex	---	ULINT	RO	Possible	---
	02	Ch2 Time Stamp	0	0000000000000000 to FFFFFFFFFFFFFFFF hex	---	ULINT	RO	Possible	---

Index (hex)	Subindex (hex)	Object name	Default value	Data range	Unit	Data type	Access	I/O allocation	Data attribute
7000	---	Counter Operation Command	---	---	---	---	---	---	---
	00	Number of Entries	2	2 to 6	---	USINT	RO	Not possible	---
	01	Ch1 Counter Operation Command*1	0000 hex	0000 to FFFF hex	---	WORD	RW	Possible	N
	02	Ch2 Counter Operation Command*1	0000 hex	0000 to FFFF hex	---	WORD	RW	Possible	N
	03	Ch3 Counter Operation Command*1	0000 hex	0000 to FFFF hex	---	WORD	RW	Possible	N
	04	Ch4 Counter Operation Command*1	0000 hex	0000 to FFFF hex	---	WORD	RW	Possible	N
	05	Ch5 Counter Operation Command*1	0000 hex	0000 to FFFF hex	---	WORD	RW	Possible	N
	06	Ch6 Counter Operation Command*1	0000 hex	0000 to FFFF hex	---	WORD	RW	Possible	N

*1. Aggregated counter operation command data for Ch□. Refer to *Ch□ Counter Operation Commands* on page 6-23 for details on counter operation command for Ch□.

Index (hex)	Subindex (hex)	Object name	Default value	Data range	Unit	Data type	Access	I/O allocation	Data attribute
7001	---	Counter Log Operation Command	---	---	---	---	---	---	---
	00	Number of Entries	1	1	---	USINT	RO	Not possible	---
	01	Ch1 Counter Log Operation Command*1	0000 hex	0000 to 0003 hex	---	WORD	RW	Possible	N

*1. Aggregated Counter Log Operation Command data. Refer to *Ch1 Counter Log Operation Commands* on page 6-26 for details on counter log operation command for Ch£.

Index (hex)	Subindex (hex)	Object name	Default value	Data range	Unit	Data type	Access	I/O allocation	Data attribute
7003	---	Preset Command Value	---	---	---	---	---	---	---
	00	Number of Entries	2	2 to 6	---	USINT	RO	Not possible	---
	01	Ch1 Preset Command Value	0	-2147483648 to 2147483647	---	DINT	RW	Possible	N
	02	Ch2 Preset Command Value	0	-2147483648 to 2147483647	---	DINT	RW	Possible	N
	03	Ch3 Preset Command Value	0	-2147483648 to 2147483647	---	DINT	RW	Possible	N
	04	Ch4 Preset Command Value	0	-2147483648 to 2147483647	---	DINT	RW	Possible	N
	05	Ch5 Preset Command Value	0	-2147483648 to 2147483647	---	DINT	RW	Possible	N
	06	Ch6 Preset Command Value	0	-2147483648 to 2147483647	---	DINT	RW	Possible	N

Index (hex)	Subindex (hex)	Object name	Default value	Data range	Unit	Data type	Access	I/O allocation	Data attribute
7008	---	Pulse Period Measurement Command	---	---	---	---	---	---	---
	00	Number of Entries	2	2	---	USINT	RO	Not possible	---
	01	Ch1 Pulse Period Measurement Command*1	0000 hex	0000 to 0003 hex	---	WORD	RW	Possible	N
	02	Ch2 Pulse Period Measurement Command*1	0000 hex	0000 to 0003 hex	---	WORD	RW	Possible	N

*1. Aggregated Pulse Period Measurement Command data for Ch□. Refer to *Ch□ Pulse Period Measurement Commands* on page 6-26 for details on Pulse Period Measurement Command for Ch□.

Index (hex)	Subindex (hex)	Object name	Default value	Data range	Unit	Data type	Access	I/O allocation	Data attribute
700C	---	Comparison Setting Command	---	---	---	---	---	---	---
	00	Number of Entries	1	1	---	USINT	RO	Not possible	---
	01	Comparison Setting Command*1	0000 hex	0000 to FFFF hex	---	WORD	RW	Possible	N

*1. Aggregated comparison setting command data. Refer to *Comparison Setting Commands* on page 6-27 for details on Comparison Setting Command.

Index (hex)	Subindex (hex)	Object name	Default value	Data range	Unit	Data type	Access	I/O allocation	Data attribute
700D	---	Comparison Setting Data Number	---	---	---	---	---	---	---
	00	Number of Entries	1	1	---	USINT	RO	Not possible	---
	01	Comparison Setting Data Number	0	0 to 31	---	UINT	RW	Possible	N

Index (hex)	Subindex (hex)	Object name	Default value	Data range	Unit	Data type	Access	I/O allocation	Data attribute
700E	---	Upper/Lower Limit Value of Range Comparison Write Data	---	---	---	---	---	---	---
	00	Number of Entries	2	2	---	USINT	RO	Not possible	---
	01	Lower Limit Value of Range Comparison Write Data	0	-2147483648 to 2147483647	---	DINT	RW	Possible	N
	02	Upper Limit Value of Range Comparison Write Data	0	-2147483648 to 2147483647	---	DINT	RW	Possible	N

Index (hex)	Subindex (hex)	Object name	Default value	Data range	Unit	Data type	Access	I/O allocation	Data attribute
700F	---	Output Pattern of Range Comparison Write Data	---	---	---	---	---	---	---
	00	Number of Entries	1	1	---	USINT	RO	Not possible	---
	01	Output Pattern of Range Comparison Write Data*1	0000 hex	0000 to 003F hex	---	WORD	RW	Possible	N

*1. Aggregated data for Output Pattern of Range Comparison Write Data. Refer to *Output Pattern of Range Comparison Write Data* on page 6-33 for details on Output Pattern of Range Comparison Write Data.

Index (hex)	Subindex (hex)	Object name	Default value	Data range	Unit	Data type	Access	I/O allocation	Data attribute
7011	---	Target Value of Target Comparison Write Data	---	---	---	---	---	---	---
	00	Number of Entries	1	1	---	USINT	RO	Not possible	---
	01	Target Value of Target Comparison Write Data	0	-2147483648 to 2147483647	---	DINT	RW	Possible	N

Index (hex)	Subindex (hex)	Object name	Default value	Data range	Unit	Data type	Access	I/O allocation	Data attribute
7012	---	Advance Time of Target Comparison Write Data	---	---	---	---	---	---	---
	00	Number of Entries	1	1	---	USINT	RO	Not possible	---
	01	Advance Time of Target Comparison Write Data	0	0 to 65535	μs	UINT	RW	Possible	N

Index (hex)	Subindex (hex)	Object name	Default value	Data range	Unit	Data type	Access	I/O allocation	Data attribute
7013	---	Crossing Output Pattern of Target Comparison Write Data	---	---	---	---	---	---	---
	00	Number of Entries	2	2	---	USINT	RO	Not possible	---
	01	pCV Crossing Output Pattern of Target Comparison Write Data*1	0000 hex	0000 to FFFF hex	---	WORD	RW	Possible	N
	02	mCV Crossing Output Pattern of Target Comparison Write Data*2	0000 hex	0000 to FFFF hex	---	WORD	RW	Possible	N

*1. Aggregated data for pCV Crossing Output Pattern of Target Comparison Write Data. Refer to *pCV Crossing Output Pattern of Target Comparison Write Data* on page 6-28 for details on pCV Crossing Output Pattern of Target Comparison Write Data.

*2. Aggregated data for mCV Crossing Output Pattern of Target Comparison Write Data. Refer to *mCV Crossing Output Pattern of Target Comparison Write Data* on page 6-29 for details on mCV Crossing Output Pattern of Target Comparison Write Data.

Index (hex)	Subindex (hex)	Object name	Default value	Data range	Unit	Data type	Access	I/O allocation	Data attribute
7014	---	Comparison Setting Data Enable	---	---	---	---	---	---	---
	00	Number of Entries	4	4	---	USINT	RO	Not possible	---
	01	Ch1 Comparison Setting Data Enable1*1	0000 hex	0000 to FFFF hex	---	WORD	RW	Possible	N
	02	Ch2 Comparison Setting Data Enable1*1	0000 hex	0000 to FFFF hex	---	WORD	RW	Possible	N
	03	Ch1 Comparison Setting Data Enable2*2	0000 hex	0000 to FFFF hex	---	WORD	RW	Possible	N
	04	Ch2 Comparison Setting Data Enable2*2	0000 hex	0000 to FFFF hex	---	WORD	RW	Possible	N

*1. Aggregated Ch□ Comparison Setting Data Enable1 data. Refer to *Ch□ Comparison Setting Data Enable1* on page 6-34 for details on Ch□ Comparison Setting Data Enable1.

*2. Aggregated Ch□ Comparison Setting Data Enable2 data. Refer to *Ch□ Comparison Setting Data Enable2* on page 6-35 for details on Ch□ Comparison Setting Data Enable2.

Index (hex)	Subindex (hex)	Object name	Default value	Data range	Unit	Data type	Access	I/O allocation	Data attribute
7016	---	Comparison Setting Data Enable 6ch Mode	---	---	---	---	---	---	---
	00	Number of Entries	1	1	---	USINT	RO	Not possible	---
	01	Comparison Setting Data Enable 6ch Mode*1	0000 hex	0000 to 003F hex	---	WORD	RW	Possible	N

*1. Aggregated Comparison Setting Data Enable data in 6ch mode. Refer to *Comparison Setting Data Enable: 6ch Mode* on page 6-36 for details on Comparison Setting Data Enable 6ch mode.

Index (hex)	Subindex (hex)	Object name	Default value	Data range	Unit	Data type	Access	I/O allocation	Data attribute
7017	---	PWM Operation Command	---	---	---	---	---	---	---
	00	Number of Entries	1	1	---	USINT	RO	Not possible	---
	01	External Output0 PWM Operation Command*1	0000 hex	0000 to 000F hex	---	WORD	RW	Possible	N

*1. Aggregated external output0 PWM operation command data. Refer to *External Output0 PWM Operation Command* on page 6-37 for more information on external output0 PWM operation command.

Index (hex)	Subindex (hex)	Object name	Default value	Data range	Unit	Data type	Access	I/O allocation	Data attribute
7018	---	PWM Frequency Setting	---	---	---	---	---	---	---
	00	Number of Entries	1	1	---	USINT	RO	Not possible	---
	01	External Output0 PWM Frequency Setting	0	0 to 65535	---	UINT	RW	Possible	N

Index (hex)	Subindex (hex)	Object name	Default value	Data range	Unit	Data type	Access	I/O allocation	Data attribute
7019	---	PWM Duty Setting	---	---	---	---	---	---	---
	00	Number of Entries	1	1	---	USINT	RO	Not possible	---
	01	External Output0 PWM Duty Setting	0	0 to 1000	---	UINT	RW	Possible	N

Index (hex)	Subindex (hex)	Object name	Default value	Data range	Unit	Data type	Access	I/O allocation	Data attribute
701A	---	External Output Force ON/OFF Command	---	---	---	---	---	---	---
	00	Number of Entries	1	1	---	USINT	RO	Not possible	---
	01	External Output Force ON/OFF Command*1	0000 hex	0000 to FFFF hex	---	WORD	RW	Possible	N

*1. Aggregated external output force ON/OFF command data. Refer to *External Output Force ON/OFF Operation Command* on page 6-25 for more information on external output force ON/OFF command.

Index (hex)	Subindex (hex)	Object name	Default value	Data range	Unit	Data type	Access	I/O allocation	Data attribute
701B	---	Output Pattern Counter Reset/Preset of Target Comparison	---	---	---	---	---	---	---
	00	Number of Entries	2	2	---	USINT	RO	Not possible	---
	01	Output Pattern at Ch1 Counter Reset/Preset of Target Comparison*1	0000 hex	0000 to FFFF hex	---	WORD	RW	Possible	N
	02	Output Pattern at Ch2 Counter Reset/Preset of Target Comparison	0000 hex	0000 to FFFF hex	---	WORD	RW	Possible	N

*1. Aggregated Ch□ Counter Reset/Preset of Target Comparison Output Pattern data. Refer to *Ch□ Counter Reset/Preset of Target Comparison Output Pattern* on page 6-31 for details of the Ch□ Counter Reset/Preset of Target Comparison Output Pattern.

A-3-4 Other Objects

This section lists other objects.

Index (hex)	Subindex (hex)	Object name	Default value	Data range	Unit	Data type	Access	I/O allocation	Data attribute
5000	---	Mode Setting	---	---	---	---	---	---	---
	00	Number of Entries	3	3	---	USINT	RO	Not possible	---
	01	Counter Mode	0	0/1	---	USINT	RW	Not possible	Y
	02	Comparison Function Mode	0	0/1	---	USINT	RW	Not possible	Y
	03	Counter Log Mode	0	0/1	---	USINT	RW	Not possible	Y

Index (hex)	Subindex (hex)	Object name	Default value	Data range	Unit	Data type	Access	I/O allocation	Data attribute
5001	---	Counter Type	---	---	---	---	---	---	---
	00	Number of Entries	2	2 to 6	---	USINT	RO	Not possible	---
	01	Ch1 Counter Type	0	0/1	---	USINT	RW	Not possible	Y
	02	Ch2 Counter Type	0	0/1	---	USINT	RW	Not possible	Y
	03	Ch3 Counter Type	0	0/1	---	USINT	RW	Not possible	Y
	04	Ch4 Counter Type	0	0/1	---	USINT	RW	Not possible	Y
	05	Ch5 Counter Type	0	0/1	---	USINT	RW	Not possible	Y
	06	Ch6 Counter Type	0	0/1	---	USINT	RW	Not possible	Y

Index (hex)	Subindex (hex)	Object name	Default value	Data range	Unit	Data type	Access	I/O allocation	Data attribute
5002	---	Maximum Counter Value	---	---	---	---	---	---	---
	00	Number of Entries	2	2 to 6	---	USINT	RO	Not possible	---
	01	Ch1 Maximum Counter Value	2147483647	1 to 2147483647	---	DINT	RW	Not possible	Y
	02	Ch2 Maximum Counter Value	2147483647	1 to 2147483647	---	DINT	RW	Not possible	Y
	03	Ch3 Maximum Counter Value	2147483647	1 to 2147483647	---	DINT	RW	Not possible	Y
	04	Ch4 Maximum Counter Value	2147483647	1 to 2147483647	---	DINT	RW	Not possible	Y
	05	Ch5 Maximum Counter Value	2147483647	1 to 2147483647	---	DINT	RW	Not possible	Y
	06	Ch6 Maximum Counter Value	2147483647	1 to 2147483647	---	DINT	RW	Not possible	Y

Index (hex)	Subindex (hex)	Object name	Default value	Data range	Unit	Data type	Access	I/O allocation	Data attribute
5003	---	Minimum Counter Value	---	---	---	---	---	---	---
	00	Number of Entries	2	2 to 6	---	USINT	RO	Not possible	---
	01	Ch1 Minimum Counter Value	-2147483648	-2147483648 to 0	---	DINT	RW	Not possible	Y
	02	Ch2 Minimum Counter Value	-2147483648	-2147483648 to 0	---	DINT	RW	Not possible	Y
	03	Ch3 Minimum Counter Value	-2147483648	-2147483648 to 0	---	DINT	RW	Not possible	Y
	04	Ch4 Minimum Counter Value	-2147483648	-2147483648 to 0	---	DINT	RW	Not possible	Y
	05	Ch5 Minimum Counter Value	-2147483648	-2147483648 to 0	---	DINT	RW	Not possible	Y
	06	Ch6 Minimum Counter Value	-2147483648	-2147483648 to 0	---	DINT	RW	Not possible	Y

Index (hex)	Subindex (hex)	Object name	Default value	Data range	Unit	Data type	Access	I/O allocation	Data attribute
5004	---	Pulse Input Method	---	---	---	---	---	---	---
	00	Number of Entries	2	2	---	USINT	RO	Not possible	---
	01	Ch1 Pulse Input Method	2	0/1/2/3/4	---	USINT	RW	Not possible	Y
	02	Ch2 Pulse Input Method	2	0/1/2/3/4	---	USINT	RW	Not possible	Y

Index (hex)	Subindex (hex)	Object name	Default value	Data range	Unit	Data type	Access	I/O allocation	Data attribute
5005	---	Count Direction	---	---	---	---	---	---	---
	00	Number of Entries	2	2	---	USINT	RO	Not possible	---
	01	Ch1 Count Direction	2	0/1	---	USINT	RW	Not possible	Y
	02	Ch2 Count Direction	2	0/1	---	USINT	RW	Not possible	Y

Index (hex)	Subindex (hex)	Object name	Default value	Data range	Unit	Data type	Access	I/O allocation	Data attribute
5006	---	Time Window	---	---	---	---	---	---	---
	00	Number of Entries	2	2 to 6	---	USINT	RO	Not possible	---
	01	Ch1 Time Window	0	0 to 65535	ms	UINT	RW	Not possible	Y
	02	Ch2 Time Window	0	0 to 65535	ms	UINT	RW	Not possible	Y
	03	Ch3 Time Window	0	0 to 65535	ms	UINT	RW	Not possible	Y
	04	Ch4 Time Window	0	0 to 65535	ms	UINT	RW	Not possible	Y
	05	Ch5 Time Window	0	0 to 65535	ms	UINT	RW	Not possible	Y
	06	Ch6 Time Window	0	0 to 65535	ms	UINT	RW	Not possible	Y

Index (hex)	Subindex (hex)	Object name	Default value	Data range	Unit	Data type	Access	I/O allocation	Data attribute
5007	---	Counter Noise Filter	---	---	---	---	---	---	---
	00	Number of Entries	3	3	---	USINT	RO	Not possible	---
	01	Ch1 Counter Noise Filter	4		---	ENUM	RW	Not possible	Y
	02	Ch2 Counter Noise Filter	4	0/1/2/3/4/5/6/7/8/9/10/11/12	---	UINT	RW	Not possible	Y
	03	Counter Noise Filter (6ch Mode)	1	0/1/2/3/4/5/6/7/8/9	---	UINT	RW	Not possible	Y

Index (hex)	Subindex (hex)	Object name	Default value	Data range	Unit	Data type	Access	I/O allocation	Data attribute
5008	---	Ch1 External Input Function Selection	---	---	---	---	---	---	---
	00	Number of Entries	36	36	---	USINT	RO	Not possible	---
	01	Ch1 External Input0 Gate control Enable/Disable Setting	0	0/1/2	---	UINT	RW	Not possible	Y
	02	Ch1 External Input0 Reset Execution Conditions Setting	0	0/1/2/3	---	UINT	RW	Not possible	Y
	03	Ch1 External Input0 Preset Execution Conditions Setting	0	0/1/2/3	---	UINT	RW	Not possible	Y
	04	Ch1 External Input0 Latch1 Execution Conditions Setting	0	0/1/2/3	---	UINT	RW	Not possible	Y
	05	Ch1 External Input0 Latch2 Execution Conditions Setting	0	0/1/2/3	---	UINT	RW	Not possible	Y
	06	Ch1 External Input0 Counter Log Enable Setting	0	0/1/2	---	UINT	RW	Not possible	Y
	07	Ch1 External Input1 Gate control Enable/Disable Setting	0	0/1/2	---	UINT	RW	Not possible	Y
	08	Ch1 External Input1 Reset Execution Conditions Setting	0	0/1/2/3	---	UINT	RW	Not possible	Y
	09	Ch1 External Input1 Preset Execution Conditions Setting	0	0/1/2/3	---	UINT	RW	Not possible	Y
	0A	Ch1 External Input1 Latch1 Execution Conditions Setting	0	0/1/2/3	---	UINT	RW	Not possible	Y
	0B	Ch1 External Input1 Latch2 Execution Conditions Setting	0	0/1/2/3	---	UINT	RW	Not possible	Y
	0C	Ch1 External Input1 Counter Log Enable Setting	0	0/1/2	---	UINT	RW	Not possible	Y

Index (hex)	Subindex (hex)	Object name	Default value	Data range	Unit	Data type	Access	I/O allocation	Data attribute
5008	0D	Ch1 External Input2 Gate control Enable/Disable Setting	0	0/1/2	---	UINT	RW	Not possible	Y
	0E	Ch1 External Input2 Reset Execution Conditions Setting	0	0/1/2/3	---	UINT	RW	Not possible	Y
	0F	Ch1 External Input2 Preset Execution Conditions Setting	0	0/1/2/3	---	UINT	RW	Not possible	Y
	10	Ch1 External Input2 Latch1 Execution Conditions Setting	0	0/1/2/3	---	UINT	RW	Not possible	Y
	11	Ch1 External Input2 Latch2 Execution Conditions Setting	0	0/1/2/3	---	UINT	RW	Not possible	Y
	12	Ch1 External Input2 Counter Log Enable Setting	0	0/1/2	---	UINT	RW	Not possible	Y
	13	Ch1 External Input3 Gate control Enable/Disable Setting	0	0/1/2	---	UINT	RW	Not possible	Y
	14	Ch1 External Input3 Reset Execution Conditions Setting	0	0/1/2/3	---	UINT	RW	Not possible	Y
	15	Ch1 External Input3 Preset Execution Conditions Setting	0	0/1/2/3	---	UINT	RW	Not possible	Y
	16	Ch1 External Input3 Latch1 Execution Conditions Setting	0	0/1/2/3	---	UINT	RW	Not possible	Y
	17	Ch1 External Input3 Latch2 Execution Conditions Setting	0	0/1/2/3	---	UINT	RW	Not possible	Y
	18	Ch1 External Input3 Counter Log Enable Setting	0	0/1/2	---	UINT	RW	Not possible	Y

Index (hex)	Subindex (hex)	Object name	Default value	Data range	Unit	Data type	Access	I/O allocation	Data attribute
5008	19	Ch1 External Input4 Gate control Enable/Disable Setting	0	0/1/2	---	UINT	RW	Not possible	Y
	1A	Ch1 External Input4 Reset Execution Conditions Setting	0	0/1/2/3	---	UINT	RW	Not possible	Y
	1B	Ch1 External Input4 Preset Execution Conditions Setting	0	0/1/2/3	---	UINT	RW	Not possible	Y
	1C	Ch1 External Input4 Latch1 Execution Conditions Setting	0	0/1/2/3	---	UINT	RW	Not possible	Y
	1D	Ch1 External Input4 Latch2 Execution Conditions Setting	0	0/1/2/3	---	UINT	RW	Not possible	Y
	1E	Ch1 External Input4 Counter Log Enable Setting	0	0/1/2	---	UINT	RW	Not possible	Y
	1F	Ch1 External Input5 Gate control Enable/Disable Setting	0	0/1/2	---	UINT	RW	Not possible	Y
	20	Ch1 External Input5 Reset Execution Conditions Setting	0	0/1/2/3	---	UINT	RW	Not possible	Y
	21	Ch1 External Input5 Preset Execution Conditions Setting	0	0/1/2/3	---	UINT	RW	Not possible	Y
	22	Ch1 External Input5 Latch1 Execution Conditions Setting	0	0/1/2/3	---	UINT	RW	Not possible	Y
	23	Ch1 External Input5 Latch2 Execution Conditions Setting	0	0/1/2/3	---	UINT	RW	Not possible	Y
	24	Ch1 External Input5 Counter Log Enable Setting	0	0/1/2	---	UINT	RW	Not possible	Y

Index (hex)	Subindex (hex)	Object name	Default value	Data range	Unit	Data type	Access	I/O allocation	Data attribute
5009	---	Ch2 External Input Function Selection	---	---	---	---	---	---	---
	00	Number of Entries	30	30	---	USINT	RO	Not possible	---
	01	Ch2 External Input0 Gate control Enable/Disable Setting	0	0/1/2	---	UINT	RW	Not possible	Y

Index (hex)	Subindex (hex)	Object name	Default value	Data range	Unit	Data type	Access	I/O allocation	Data attribute
5009	02	Ch2 External Input0 Reset Execution Conditions Setting	0	0/1/2/3	---	UINT	RW	Not possible	Y
	03	Ch2 External Input0 Preset Execution Conditions Setting	0	0/1/2/3	---	UINT	RW	Not possible	Y
	04	Ch2 External Input0 Latch1 Execution Conditions Setting	0	0/1/2/3	---	UINT	RW	Not possible	Y
	05	Ch2 External Input0 Latch2 Execution Conditions Setting	0	0/1/2/3	---	UINT	RW	Not possible	Y
	06	Ch2 External Input1 Gate control Enable/Disable Setting	0	0/1/2	---	UINT	RW	Not possible	Y
	07	Ch2 External Input1 Reset Execution Conditions Setting	0	0/1/2/3	---	UINT	RW	Not possible	Y
	08	Ch2 External Input1 Preset Execution Conditions Setting	0	0/1/2/3	---	UINT	RW	Not possible	Y
	09	Ch2 External Input1 Latch1 Execution Conditions Setting	0	0/1/2/3	---	UINT	RW	Not possible	Y
	0A	Ch2 External Input1 Latch2 Execution Conditions Setting	0	0/1/2/3	---	UINT	RW	Not possible	Y
	0B	Ch2 External Input2 Gate control Enable/Disable Setting	0	0/1/2	---	UINT	RW	Not possible	Y
	0C	Ch2 External Input2 Reset Execution Conditions Setting	0	0/1/2/3	---	UINT	RW	Not possible	Y
	0D	Ch2 External Input2 Preset Execution Conditions Setting	0	0/1/2/3	---	UINT	RW	Not possible	Y
	0E	Ch2 External Input2 Latch1 Execution Conditions Setting	0	0/1/2/3	---	UINT	RW	Not possible	Y
	0F	Ch2 External Input2 Latch2 Execution Conditions Setting	0	0/1/2/3	---	UINT	RW	Not possible	Y
	10	Ch2 External Input3 Gate control Enable/Disable Setting	0	0/1/2	---	UINT	RW	Not possible	Y
	11	Ch2 External Input3 Reset Execution Conditions Setting	0	0/1/2/3	---	UINT	RW	Not possible	Y

Index (hex)	Subindex (hex)	Object name	Default value	Data range	Unit	Data type	Access	I/O allocation	Data attribute
5009	12	Ch2 External Input3 Preset Execution Conditions Setting	0	0/1/2/3	---	UINT	RW	Not possible	Y
	13	Ch2 External Input3 Latch1 Execution Conditions Setting	0	0/1/2/3	---	UINT	RW	Not possible	Y
	14	Ch2 External Input3 Latch2 Execution Conditions Setting	0	0/1/2/3	---	UINT	RW	Not possible	Y
	15	Ch2 External Input4 Gate control Enable/Disable Setting	0	0/1/2	---	UINT	RW	Not possible	Y
	16	Ch2 External Input4 Reset Execution Conditions Setting	0	0/1/2/3	---	UINT	RW	Not possible	Y
	17	Ch2 External Input4 Preset Execution Conditions Setting	0	0/1/2/3	---	UINT	RW	Not possible	Y
	18	Ch2 External Input4 Latch1 Execution Conditions Setting	0	0/1/2/3	---	UINT	RW	Not possible	Y
	19	Ch2 External Input4 Latch2 Execution Conditions Setting	0	0/1/2/3	---	UINT	RW	Not possible	Y
	1A	Ch2 External Input5 Gate control Enable/Disable Setting	0	0/1/2	---	UINT	RW	Not possible	Y
	1B	Ch2 External Input5 Reset Execution Conditions Setting	0	0/1/2/3	---	UINT	RW	Not possible	Y
	1C	Ch2 External Input5 Preset Execution Conditions Setting	0	0/1/2/3	---	UINT	RW	Not possible	Y
	1D	Ch2 External Input5 Latch1 Execution Conditions Setting	0	0/1/2/3	---	UINT	RW	Not possible	Y
	1E	Ch2 External Input5 Latch2 Execution Conditions Setting	0	0/1/2/3	---	UINT	RW	Not possible	Y

Index (hex)	Subindex (hex)	Object name	Default value	Data range	Unit	Data type	Access	I/O allocation	Data attribute
500A	---	Ch3-6 External Input Function Selection	---	---	---	---	---	---	---
	00	Number of Entries	12	12	---	USINT	RO	Not possible	---
	01	Ch3 External Input2 Reset Execution Conditions Setting	0	0/1/2/3	---	UINT	RW	Not possible	---
	02	Ch3 External Input2 Preset Execution Conditions Setting	0	0/1/2/3	---	UINT	RW	Not possible	---
	03	Ch3 External Input2 Latch1 Execution Conditions Setting	0	0/1/2/3	---	UINT	RW	Not possible	---
	04	Ch4 External Input3 Reset Execution Conditions Setting	0	0/1/2/3	---	UINT	RW	Not possible	---
	05	Ch4 External Input3 Preset Execution Conditions Setting	0	0/1/2/3	---	UINT	RW	Not possible	---
	06	Ch4 External Input3 Latch1 Execution Conditions Setting	0	0/1/2/3	---	UINT	RW	Not possible	---
	07	Ch5 External Input4 Reset Execution Conditions Setting	0	0/1/2/3	---	UINT	RW	Not possible	---
	08	Ch5 External Input4 Preset Execution Conditions Setting	0	0/1/2/3	---	UINT	RW	Not possible	---
	09	Ch5 External Input4 Latch1 Execution Conditions Setting	0	0/1/2/3	---	UINT	RW	Not possible	---
	0A	Ch6 External Input5 Reset Execution Conditions Setting	0	0/1/2/3	---	UINT	RW	Not possible	---
	0B	Ch6 External Input5 Preset Execution Conditions Setting	0	0/1/2/3	---	UINT	RW	Not possible	---
	0C	Ch6 External Input5 Latch1 Execution Conditions Setting	0	0/1/2/3	---	UINT	RW	Not possible	---

Index (hex)	Subindex (hex)	Object name	Default value	Data range	Unit	Data type	Access	I/O allocation	Data attribute
500B	---	Edge Detection Method	---	---	---	---	---	---	---
	00	Number of Entries	2	2	---	USINT	RO	Not possible	---
	01	Ch1 Edge Detection Method	0	0 to 3	---	UINT	RW	Not possible	---
	02	Ch2 Edge Detection Method	0	0 to 3	---	UINT	RW	Not possible	---

Index (hex)	Subindex (hex)	Object name	Default value	Data range	Unit	Data type	Access	I/O allocation	Data attribute
500E	---	External Input Noise Filter	---	---	---	---	---	---	---
	00	Number of Entries	1	1	---	USINT	RO	Not possible	---
	01	External Input Noise Filter	0	0/1/2/3/4/5/6/7/8	---	USINT	RW	Not possible	---

Index (hex)	Subindex (hex)	Object name	Default value	Data range	Unit	Data type	Access	I/O allocation	Data attribute
5010	---	Advance Time Range Setting	---	---	---	---	---	---	---
	00	Number of Entries	1	1	---	USINT	RO	Not possible	---
	01	Advance Time Range Setting	0	0/1/2/3/4/5/6/7/8/9/10/11/12	---	USINT	RW	Not possible	---

Index (hex)	Subindex (hex)	Object name	Default value	Data range	Unit	Data type	Access	I/O allocation	Data attribute
5011	---	Target Comparison Data Initial Target Value	---	---	---	---	---	---	---
	00	Number of Entries	8	8	---	USINT	RO	Not possible	---
	01	Ch1 Target Comparison Data0 Initial Target Value	0	-2147483648 to 2147483647	---	DINT	RW	Not possible	---
	02	Ch1 Target Comparison Data1 Initial Target Value	0	-2147483648 to 2147483647	---	DINT	RW	Not possible	---
	03	Ch1 Target Comparison Data2 Initial Target Value	0	-2147483648 to 2147483647	---	DINT	RW	Not possible	---
	04	Ch1 Target Comparison Data3 Initial Target Value	0	-2147483648 to 2147483647	---	DINT	RW	Not possible	---
	05	Ch2 Target Comparison Data0 Initial Target Value	0	-2147483648 to 2147483647	---	DINT	RW	Not possible	---
	06	Ch2 Target Comparison Data1 Initial Target Value	0	-2147483648 to 2147483647	---	DINT	RW	Not possible	---
	07	Ch2 Target Comparison Data2 Initial Target Value	0	-2147483648 to 2147483647	---	DINT	RW	Not possible	---
	08	Ch2 Target Comparison Data3 Initial Target Value	0	-2147483648 to 2147483647	---	DINT	RW	Not possible	---

Index (hex)	Subindex (hex)	Object name	Default value	Data range	Unit	Data type	Access	I/O allocation	Data attribute
5012	---	Target Comparison Data Initial Advance Time	---	---	---	---	---	---	---
	00	Number of Entries	8	8	---	USINT	RO	Not possible	---
	01	Ch1 Target Comparison Data0 Initial Advance Time	0	0 to 65535	μs	DINT	RW	Not possible	---
	02	Ch1 Target Comparison Data1 Initial Advance Time	0	0 to 65535	μs	DINT	RW	Not possible	---
	03	Ch1 Target Comparison Data2 Initial Advance Time	0	0 to 65535	μs	DINT	RW	Not possible	---
	04	Ch1 Target Comparison Data3 Initial Advance Time	0	0 to 65535	μs	DINT	RW	Not possible	---
	05	Ch2 Target Comparison Data0 Initial Advance Time	0	0 to 65535	μs	DINT	RW	Not possible	---
	06	Ch2 Target Comparison Data1 Initial Advance Time	0	0 to 65535	μs	DINT	RW	Not possible	---
	07	Ch2 Target Comparison Data2 Initial Advance Time	0	0 to 65535	μs	DINT	RW	Not possible	---
	08	Ch2 Target Comparison Data3 Initial Advance Time	0	0 to 65535	μs	DINT	RW	Not possible	---

Index (hex)	Subindex (hex)	Object name	Default value	Data range	Unit	Data type	Access	I/O allocation	Data attribute
5013	---	Target Comparison Data Initial Output Pattern	---	---	---	---	---	---	---
	00	Number of Entries	16	16	---	USINT	RO	Not possible	---
	01	Ch1 Target Comparison Data0 Initial pCV Output Pattern	0000 hex	0000 to FFFF hex	---	WORD	RW	Not possible	---
	02	Ch1 Target Comparison Data1 Initial pCV Output Pattern	0000 hex	0000 to FFFF hex	---	WORD	RW	Not possible	---
	03	Ch1 Target Comparison Data2 Initial pCV Output Pattern	0000 hex	0000 to FFFF hex	---	WORD	RW	Not possible	---
	04	Ch1 Target Comparison Data3 Initial pCV Output Pattern	0000 hex	0000 to FFFF hex	---	WORD	RW	Not possible	---
	05	Ch2 Target Comparison Data0 Initial pCV Output Pattern	0000 hex	0000 to FFFF hex	---	WORD	RW	Not possible	---
	06	Ch2 Target Comparison Data1 Initial pCV Output Pattern	0000 hex	0000 to FFFF hex	---	WORD	RW	Not possible	---
	07	Ch2 Target Comparison Data2 Initial pCV Output Pattern	0000 hex	0000 to FFFF hex	---	WORD	RW	Not possible	---
	08	Ch2 Target Comparison Data3 Initial pCV Output Pattern	0000 hex	0000 to FFFF hex	---	WORD	RW	Not possible	---
	09	Ch1 Target Comparison Data0 Initial mCV Output Pattern	0000 hex	0000 to FFFF hex	---	WORD	RW	Not possible	---
	0A	Ch1 Target Comparison Data1 Initial mCV Output Pattern	0000 hex	0000 to FFFF hex	---	WORD	RW	Not possible	---
	0B	Ch1 Target Comparison Data2 Initial mCV Output Pattern	0000 hex	0000 to FFFF hex	---	WORD	RW	Not possible	---
	0C	Ch1 Target Comparison Data3 Initial mCV Output Pattern	0000 hex	0000 to FFFF hex	---	WORD	RW	Not possible	---
	0D	Ch2 Target Comparison Data0 Initial mCV Output Pattern	0000 hex	0000 to FFFF hex	---	WORD	RW	Not possible	---
	0E	Ch2 Target Comparison Data1 Initial mCV Output Pattern	0000 hex	0000 to FFFF hex	---	WORD	RW	Not possible	---
	0F	Ch2 Target Comparison Data2 Initial mCV Output Pattern	0000 hex	0000 to FFFF hex	---	WORD	RW	Not possible	---

Index (hex)	Subindex (hex)	Object name	Default value	Data range	Unit	Data type	Access	I/O allocation	Data attribute
5013	10	Ch2 Target Comparison Data3 Initial mCV Output Pattern	0000 hex	0000 to FFFF hex	---	WORD	RW	Not possible	---

Index (hex)	Subindex (hex)	Object name	Default value	Data range	Unit	Data type	Access	I/O allocation	Data attribute
5014	---	Hysteresis Data for Range Comparison Mode	---	---	---	---	---	---	---
	00	Number of Entries	2	2	---	USINT	RO	Not possible	---
	01	Ch1 Hysteresis Data for Range Comparison Mode	0	0 to 255	---	USINT	RW	Not possible	---
	02	Ch2 Hysteresis Data for Range Comparison Mode	0	0 to 255	---	USINT	RW	Not possible	---

Index (hex)	Subindex (hex)	Object name	Default value	Data range	Unit	Data type	Access	I/O allocation	Data attribute
5015	---	External Output Inter-Channel Logical Setting for Range Comparison Mode	---	---	---	---	---	---	---
	00	Number of Entries	6	6	---	USINT	RO	Not possible	---
	01	External Output0 Inter-Channel Logical Setting for Range Comparison Mode	0	0/1	---	USINT	RW	Not possible	---
	02	External Output1 Inter-Channel Logical Setting for Range Comparison Mode	0	0/1	---	USINT	RW	Not possible	---
	03	External Output2 Inter-Channel Logical Setting for Range Comparison Mode	0	0/1	---	USINT	RW	Not possible	---
	04	External Output3 Inter-Channel Logical Setting for Range Comparison Mode	0	0/1	---	USINT	RW	Not possible	---
	05	External Output4 Inter-Channel Logical Setting for Range Comparison Mode	0	0/1	---	USINT	RW	Not possible	---
	06	External Output5 Inter-Channel Logical Setting for Range Comparison Mode	0	0/1	---	USINT	RW	Not possible	---

Index (hex)	Subindex (hex)	Object name	Default value	Data range	Unit	Data type	Access	I/O allocation	Data attribute
5016	---	Output Delay Function External Output Pulse ON-Delay Time	---	---	---	---	---	---	---
	00	Number of Entries	2	2	---	USINT	RO	Not possible	---
	01	External Output0 Pulse ON-Delay Time	0	0 to 50	ms	USINT	RW	Not possible	---
	02	External Output1 Pulse ON-Delay Time	0	0 to 50	ms	USINT	RW	Not possible	---

Index (hex)	Subindex (hex)	Object name	Default value	Data range	Unit	Data type	Access	I/O allocation	Data attribute
5017	---	Output Delay Function External Output Pulse ON-Delay Time	---	---	---	---	---	---	---
	00	Number of Entries	2	2	---	USINT	RO	Not possible	---
	01	External Output0 Pulse Duration Time	0	0 to 50	ms	USINT	RW	Not possible	---
	02	External Output1 Pulse Duration Time	0	0 to 50	ms	USINT	RW	Not possible	---

Index (hex)	Subindex (hex)	Object name	Default value	Data range	Unit	Data type	Access	I/O allocation	Data attribute
5018	---	External Output Function Setting	---	---	---	---	---	---	---
	00	Number of Entries	1	1	---	USINT	RO	Not possible	---
	01	External Output0 Function Setting	0	0/1	---	USINT	RW	Not possible	---

Index (hex)	Subindex (hex)	Object name	Default value	Data range	Unit	Data type	Access	I/O allocation	Data attribute
5019	---	External Output Function Setting	---	---	---	---	---	---	---
	00	Number of Entries	1	1	---	USINT	RO	Not possible	---
	01	External Output0 PWM Unit Setting	0	0/1	---	USINT	RW	Not possible	---

Index (hex)	Subindex (hex)	Object name	Default value	Data range	Unit	Data type	Access	I/O allocation	Data attribute
501A	---	External Output Load Rejection Output Setting	---	---	---	---	---	---	---
	00	Number of Entries	6	6	---	USINT	RO	Not possible	---
	01	External Output0 Load Rejection Output Setting	0	0/1	---	USINT	RW	Not possible	---
	02	External Output1 Load Rejection Output Setting	0	0/1	---	USINT	RW	Not possible	---
	03	External Output2 Load Rejection Output Setting	0	0/1	---	USINT	RW	Not possible	---
	04	External Output3 Load Rejection Output Setting	0	0/1	---	USINT	RW	Not possible	---
	05	External Output4 Load Rejection Output Setting	0	0/1	---	USINT	RW	Not possible	---
	06	External Output5 Load Rejection Output Setting	0	0/1	---	USINT	RW	Not possible	---

Index (hex)	Subindex (hex)	Object name	Default value	Data range	Unit	Data type	Access	I/O allocation	Data attribute
501B	---	Counter Log Cycle Time Setting	---	---	---	---	---	---	---
	00	Number of Entries	1	1	---	USINT	RO	Not possible	---
	01	Ch1 Counter Log Cycle Time Setting	1000	1 to 65535	μs	USINT	RW	Not possible	---

Index (hex)	Subindex (hex)	Object name	Default value	Data range	Unit	Data type	Access	I/O allocation	Data attribute
501C	---	Range Comparison Data0 Initial Value	---	---	---	---	---	---	---
	00	Number of Entries	16	16	---	USINT	RO	Not possible	---
	01	Ch1 Range Comparison Data0 Initial Lower Limit Value	0	-2147483648 to 2147483647	---	DINT	RW	Not possible	---
	02	Ch1 Range Comparison Data0 Initial Upper Limit Value	0	-2147483648 to 2147483647	---	DINT	RW	Not possible	---
	03	Ch1 Range Comparison Data0 Initial Output Pattern	0	0000 to 003F hex	---	WORD	RW	Not possible	---

Index (hex)	Subindex (hex)	Object name	Default value	Data range	Unit	Data type	Access	I/O allocation	Data attribute
501C	04	Ch2 Range Comparison Data0 Initial Lower Limit Value	0	-2147483648 to 2147483647	---	DINT	RW	Not possible	---
	05	Ch2 Range Comparison Data0 Initial Upper Limit Value	0	-2147483648 to 2147483647	---	DINT	RW	Not possible	---
	06	Ch2 Range Comparison Data0 Initial Output Pattern	0	0000 to 003F hex	---	WORD	RW	Not possible	---
	07	Ch3 Range Comparison Data0 Initial Lower Limit Value	0	-2147483648 to 2147483647	---	DINT	RW	Not possible	---
	08	Ch3 Range Comparison Data0 Initial Upper Limit Value	0	-2147483648 to 2147483647	---	DINT	RW	Not possible	---
	09	Ch4 Range Comparison Data0 Initial Lower Limit Value	0	-2147483648 to 2147483647	---	DINT	RW	Not possible	---
	0A	Ch4 Range Comparison Data0 Initial Upper Limit Value	0	-2147483648 to 2147483647	---	DINT	RW	Not possible	---
	0B	Ch5 Range Comparison Data0 Initial Lower Limit Value	0	-2147483648 to 2147483647	---	DINT	RW	Not possible	---
	0C	Ch5 Range Comparison Data0 Initial Upper Limit Value	0	-2147483648 to 2147483647	---	DINT	RW	Not possible	---
	0D	Ch6 Range Comparison Data0 Initial Lower Limit Value	0	-2147483648 to 2147483647	---	DINT	RW	Not possible	---
	0E	Ch6 Range Comparison Data0 Initial Upper Limit Value	0	-2147483648 to 2147483647	---	DINT	RW	Not possible	---

A-4 Sample Programming

This section describes the sample programming for the High-speed Counter Unit.

A-4-1 Counter Log Data Read

This section describes a program which allocates counter log data1 to 4 as I/O data, uses latch log mode to read saved counter log data, and copies the array specification 128 items to the Unit internal buffer (ARRAY[0..127] OF DINT).

Unit Operation Settings

Unit operation settings set by program for the High-speed Counter Unit are shown below. For items not listed in the table, use the default value.

Setting	Set value	Meaning of setting
Counter Log Mode	0	Latch Log Mode*1

*1. The counter log mode is latch log mode, but data copying is possible with a similar program in cyclic log mode as well.

I/O Map

The following table shows the settings of variables that are assigned to the I/O Map in Sysmac Studio.

I/O port name	Variable name	Description	Data type	Variable type
Ch1 Counter Log Enable	N1_Ch1_Counter_Log_Enable	Counter log enable.	BOOL	Global variable
Ch1 Counter Log Read Execution	N1_Ch1_Counter_Log_Read_Execution	Counter log read execution.	BOOL	Global variable
Ch1 Counter Log Enabled Flag	N1_Ch1_Counter_Log_Enabled_Flag	Counter log enabled flag.	BOOL	Global variable
Ch1 Counter Log Buffer Full	N1_Ch1_Counter_Log_Buffer_Full	Counter log buffer full.	BOOL	Global variable
Ch1 Counter Log Data Available Flag	N1_Ch1_Counter_Log_Data_Available_Flag	Counter log data available flag.	BOOL	Global variable
Ch1 Counter Log Read Completed Flag	N1_Ch1_Counter_Log_Read_Completed_Flag	Counter log read completed flag.	BOOL	Global variable
Ch1 Counter Log Valid data number	N1_Ch1_Counter_Log_Valid_Data_Number	Ch1 counter log read data valid data number.	UINT	Global variable
Ch1 Counter Log Data1	N1_Ch1_Counter_Log_Data1	Ch1 counter log data1.	DINT	Global variable
Ch1 Counter Log Data2	N1_Ch1_Counter_Log_Data2	Ch1 counter log data2.	DINT	Global variable
Ch1 Counter Log Data3	N1_Ch1_Counter_Log_Data3	Ch1 counter log data3.	DINT	Global variable

I/O port name	Variable name	Description	Data type	Variable type
Ch1 Counter Log Data4	N1_Ch1_Counter_Log_Data4	Ch1 counter log data4.	DINT	Global variable

Variable Table

External variables and internal variables that are used in the programming are given below.

● External Variables

Use the following global variable table as external variables.

Variable name	Data type	Default value	AT specification	Retain	Constant	Network Publish	Description
N1_Ch1_Counter_Log_Enable	BOOL	FALSE	---	---	---	Do not publish.	Counter log enable.
N1_Ch1_Counter_Log_Read_Execution	BOOL	False	---	---	---	Do not publish.	Counter log read execution.
N1_Ch1_Counter_Log_Enabled_Flag	BOOL	False	---	---	---	Do not publish.	Counter log enabled flag.
N1_Ch1_Counter_Log_Buffer_Full	BOOL	False	---	---	---	Do not publish.	Counter log buffer full.
N1_Ch1_Counter_Log_Data_Available_Flag	BOOL	False	---	---	---	Do not publish.	Counter log data available flag.
N1_Ch1_Counter_Log_Read_Completed_Flag	BOOL	False	---	---	---	Do not publish.	Counter log read completed flag.
N1_Ch1_Counter_Log_Valid_Data_Number	UINT	False	---	---	---	Do not publish.	Ch1 counter log read data valid data number.
N1_Ch1_Counter_Log_Data1	DINT	0	---	---	---	Do not publish.	Ch1 counter log data1.
N1_Ch1_Counter_Log_Data2	DINT	0	---	---	---	Do not publish.	Ch1 counter log data2.
N1_Ch1_Counter_Log_Data3	DINT	0	---	---	---	Do not publish.	Ch1 counter log data3.
N1_Ch1_Counter_Log_Data4	DINT	0	---	---	---	Do not publish.	Ch1 counter log data4.

● Internal Variables

Variable name	Data type	Default value	AT specification	Retain	Constant	Description
Stage	UINT	0	---	---	---	Internal status of program.
CounterLogBuffer	ARRAY[0..127] OF DINT *1	---	---	---	---	Unit internal buffer storing counter log.

Variable name	Data type	Default value	AT specification	Retain	Constant	Description
Index	UINT	0	---	---	---	Offset position of next counter log.
TotalLogCount	UDINT	0	---	---	---	Total number of read logs.
ErrorCode	WORD	16#0000	---	---	---	Error code.
ErrorClearFlag	BOOL	False	---	---	---	Error reset flag.
i *2	INT	0	---	---	---	Loop counter.

*1. The size of the Unit internal buffer can be changed. Note that when changed, part of the program must be corrected.

*2. These are variables used only in the ST Program.

Ladder Programming

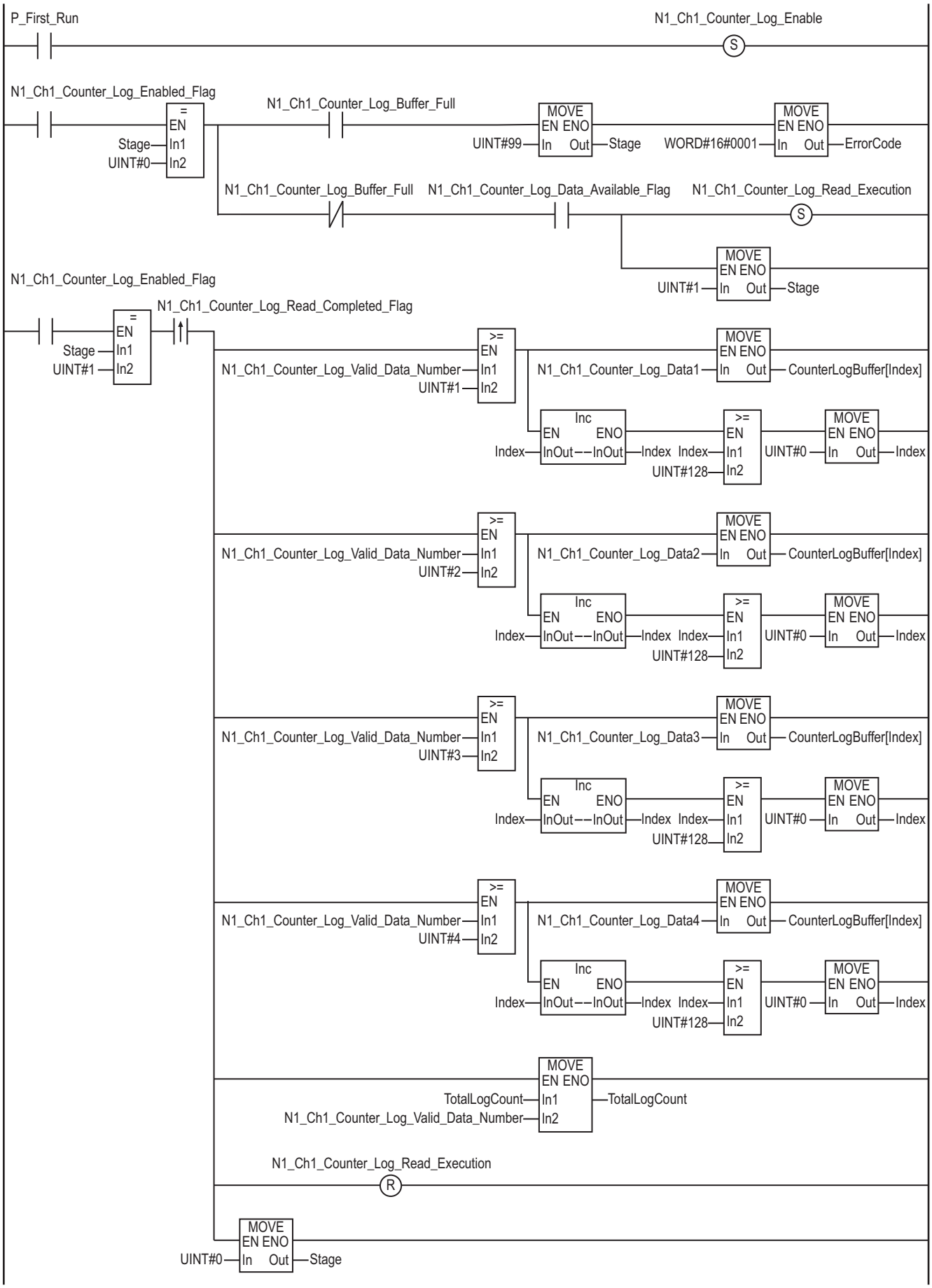

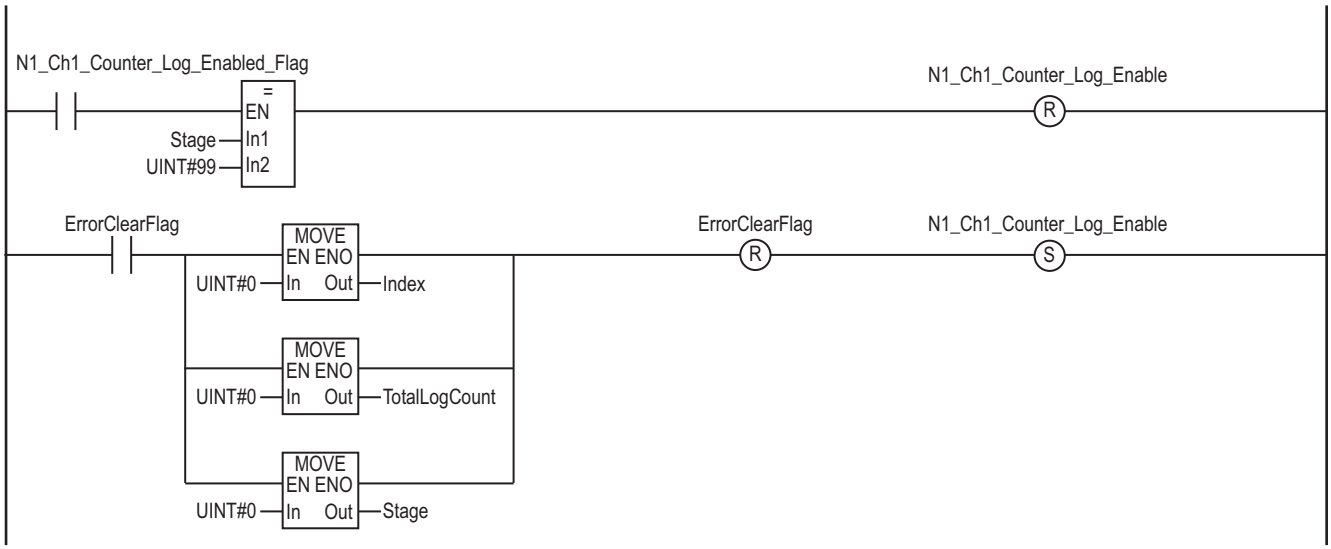

ST

```
// Initializing Variables
IF ( P_First_Run = TRUE ) THEN
    N1_Ch1_Counter_Log_Enable := TRUE;    // Ch1 Counter Log Enabled Flag
END_IF;

// Counter Log Enable
IF ( N1_Ch1_Counter_Log_Enabled_Flag = TRUE ) THEN
    CASE Stage OF
        0: // Counter Log Read Execution
            IF ( N1_Ch1_Counter_Log_Buffer_Full = TRUE ) THEN
                // Error end when counter log buffer is full
                Stage := UINT#99;
                ErrorCode := WORD#16#0001;
            ELSE
                IF ( N1_Ch1_Counter_Log_Data_Available_Flag = TRUE ) THEN
                // Execute log read when Ch1 counter log data exists
                N1_Ch1_Counter_Log_Read_Execution := TRUE;    // Ch1 Counter Log Re
ad Execution
                Stage := UINT#1;
            END_IF;
        END_IF;

        1: // Copy to Internal Buffer
            IF ( N1_Ch1_Counter_Log_Read_Completed_Flag = TRUE ) THEN
                FOR i := 1 TO N1_Ch1_Counter_Log_Valid_Data_Number DO
                    CASE i OF
                        1: CounterLogBuffer[Index] := N1_Ch1_Counter_Log_Data1;
                        2: CounterLogBuffer[Index] := N1_Ch1_Counter_Log_Data2;
```

```
                        3: CounterLogBuffer[Index] := N1_Ch1_Counter_Log_Data3;
                        4: CounterLogBuffer[Index] := N1_Ch1_Counter_Log_Data4;
                    END_CASE;

                    Inc( TotalLogCount );
                    Inc( Index );
                    IF ( Index >= 128 ) THEN
                        Index := UINT#0;
                    END_IF;
                END_FOR;

                N1_Ch1_Counter_Log_Read_Execution := FALSE;    // Ch1 Counter Log R
ead Complete
                Stage := 0;
            END_IF;

        99: // Error generated
            N1_Ch1_Counter_Log_Enable := FALSE;
    END_CASE;
END_IF;

// Error Reset
IF ( ErrorClearFlag = TRUE ) THEN
    Index := UINT#0;
    ErrorClearFlag := FALSE;
    TotalLogCount := UDINT#0;
    Stage := UINT#0;
    N1_Ch1_Counter_Log_Enable := TRUE;
END_IF;
```

A-4-2 Writing/Reading Target Comparison Data

This section describes the program that writes, reads, and verifies comparison data and then enables comparison setting data in Target Comparison Mode.
Setting examples are shown in the following table.

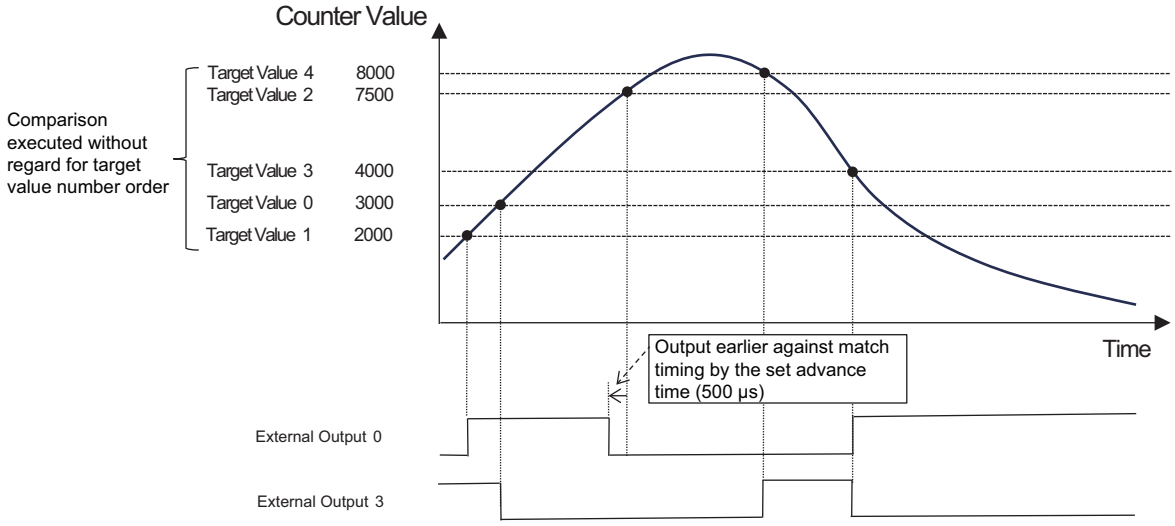

Target Comparison Data	Target Value	Advance Time (µs)	Addition matching output pattern	Subtraction matching output pattern
0	3000	0	External Output3 Reset	---
1	2000	0	External Output0 Set	---
2	7500	500	External Output0 Reset	---
3	4000	0	---	External Output0 Set External Output3 Reset
4	8000	0	---	External Output3 Set

Unit Operation Settings

Unit operation settings set by program for the High-speed Counter Unit are shown below. For items not listed in the table, use the default value.

Setting	Set value	Meaning of setting
Comparison Function Mode	0	Target Comparison Mode

I/O Map

The following table shows the settings of variables that are assigned to the I/O Map in Sysmac Studio.

I/O port name	Variable name	Description	Data type	Variable type
Target Value of Target Comparison Write Data	N1_Target_Value_of_Target_Comparison_Write_Data	Target value of target comparison write data.	DINT	Global variable
Advance Time of Target Comparison Write Data	N1_Advance_Time_of_Target_Comparison_Write_Data	Advance time of target comparison write data.	UINT	Global variable

I/O port name	Variable name	Description	Data type	Variable type
pCV Crossing Output Pattern of Target Comparison Write Data	N1_pCV_Crossing_Output_Pattern_of_Target_Comparison_Write_Data	Aggregated pCV crossing output pattern of target comparison write data.	WORD	Global variable
mCV Crossing Output Pattern of Target Comparison Write Data	N1_mCV_Crossing_Output_Pattern_of_Target_Comparison_Write_Data	Aggregated mCV crossing output pattern of target comparison write data.	WORD	Global variable
Comparison Setting Data Number	N1_Comparison_Setting_Data_Number	Comparison setting data number when using comparison setting commands.	UINT	Global variable
Comparison Setting Data Read or Write	N1_Comparison_Setting_Data_Read_or_Write	Comparison setting data read/write.	BOOL	Global variable
Ch1 Comparison Setting Data Request	N1_Ch1_Comparison_Setting_Data_Request	Executes Ch1 comparison data read/write.	BOOL	Global variable
Comparison Data Setting Completed	N1_Comparison_Data_Setting_Completed	Comparison data setting completed.	BOOL	Global variable
Comparison Setting Write Error Flag	N1_Comparison_Setting_Write_Error_Flag	Comparison setting write error flag.	BOOL	Global variable
Comparison Setting Read Error Flag	N1_Comparison_Setting_Read_Error_Flag	Comparison setting read error flag.	BOOL	Global variable
Target Value of Target Comparison Read Data	N1_Target_Value_of_Target_Comparison_Read_Data	Target value of target comparison read data.	DINT	Global variable
Advance Time of Target Comparison Read Data	N1_Advance_Time_of_Target_Comparison_Read_Data	Advance time of target comparison read data.	UINT	Global variable
pCV Crossing Output Pattern of Target Comparison Read Data	N1_pCV_Crossing_Output_Pattern_of_Target_Comparison_Read_Data	Aggregated pCV crossing output pattern of target comparison read data.	WORD	Global variable
mCV Crossing Output Pattern of Target Comparison Read Data	N1_mCV_Crossing_Output_Pattern_of_Target_Comparison_Read_Data	Aggregated mCV crossing output pattern of target comparison read data.	WORD	Global variable
Ch1 Comparison Setting Data Enable1	N1_Ch1_Comparison_Setting_Data_Enable1	Aggregated Ch1 comparison setting data enable1 data.	WORD	Global variable

Variable Table

External variables and internal variables that are used in the programming are given below.

● Data Type (Structure)

Name	Data type	Offset type	Description
TargetComparisonData	STRUCT	NJ	Target comparison data.
TargetValue	DINT	---	Target value write data.
AdvanceTimeUs	UINT	---	Advance time write data.
pCVCrossingOutputPattern	WORD	---	pCV crossing output pattern write data.

Name	Data type	Offset type	Description
mCVCrossingOutputPattern	WORD	---	mCV crossing output pattern write data.

● External Variables

Variable name	Data type	Default value	AT specification	Retain	Constant	Network Publish	Description
N1_Target_Value_of_Target_Comparison_Write_Data	DINT	0	---	---	---	Do not publish.	Target value of target comparison write data.
N1_Advance_Time_of_Target_Comparison_Write_Data	UINT	0	---	---	---	Do not publish.	Advance time of target comparison write data.
N1_pCV_Crossing_Output_Pattern_of_Target_Comparison_Write_Data	WORD	16#0000	---	---	---	Do not publish.	Aggregated pCV crossing output pattern of target comparison write data.
N1_mCV_Crossing_Output_Pattern_of_Target_Comparison_Write_Data	WORD	16#0000	---	---	---	Do not publish.	Aggregated mCV crossing output pattern of target comparison write data.
N1_Comparison_Setting_Data_Number	UINT	0	---	---	---	Do not publish.	Comparison setting data number when using comparison setting commands.
N1_Comparison_Setting_Data_Read_or_Write	BOOL	False	---	---	---	Do not publish.	Comparison setting data read/write.
N1_Ch1_Comparison_Setting_Data_Request	BOOL	False	---	---	---	Do not publish.	Executes Ch1 comparison data read/write.
N1_Comparison_Data_Setting_Completed	BOOL	False	---	---	---	Do not publish.	Comparison data setting completed.
N1_Comparison_Setting_Write_Error_Flag	BOOL	False	---	---	---	Do not publish.	Comparison setting write error flag.
N1_Comparison_Setting_Read_Error_Flag	BOOL	False	---	---	---	Do not publish.	Comparison setting read error flag.
N1_Target_Value_of_Target_Comparison_Read_Data	DINT	0	---	---	---	Do not publish.	Target value of target comparison read data.
N1_Advance_Time_of_Target_Comparison_Read_Data	UINT	0	---	---	---	Do not publish.	Advance time of target comparison read data.
N1_pCV_Crossing_Output_Pattern_of_Target_Comparison_Read_Data	WORD	16#0000	---	---	---	Do not publish.	Aggregated pCV crossing output pattern of target comparison read data.
N1_mCV_Crossing_Output_Pattern_of_Target_Comparison_Read_Data	WORD	16#0000	---	---	---	Do not publish.	Aggregated mCV crossing output pattern of target comparison read data.

Variable name	Data type	Default value	AT specification	Retain	Constant	Network Publish	Description
N1_Ch1_Comparison_Setting_Data_Enable1	WORD	16#0000	---	---	---	Do not publish.	Aggregated Ch1 comparison setting data enable1 data.

● Internal Variables

Variable name	Data type	Default value	AT specification	Retain	Constant	Description
ComparisonDataTable	ARRAY[0..4]OF TargetComparisonData	[(TargetValue:=3000, AdvanceTimeUs:=0, pCVCrossingOutputPattern:=16#0008, mCVCrossingOutputPattern:=16#0000), (TargetValue:=2000, AdvanceTimeUs:=0, pCVCrossingOutputPattern:=16#0101, mCVCrossingOutputPattern:=16#0000), (TargetValue:=7500, AdvanceTimeUs:=500, pCVCrossingOutputPattern:=16#0001, mCVCrossingOutputPattern:=16#0000), (TargetValue:=4000, AdvanceTimeUs:=0, pCVCrossingOutputPattern:=16#0000, mCVCrossingOutputPattern:=16#0109), (TargetValue:=8000, AdvanceTimeUs:=0, pCVCrossingOutputPattern:=16#0000, mCVCrossingOutputPattern:=16#0808)]	---	---	---	Target comparison data setting value.
InitializedFlag	BOOL	False	---	---	---	Initialized flag.
Stage	UINT	0	---	---	---	Internal status of program.
Index	UINT	0	---	---	---	Setting table offset position.
Error	BOOL	False	---	---	---	Error flag.
ErrorCode	WORD	16#0000	---	---	---	Error code.

Ladder Programming

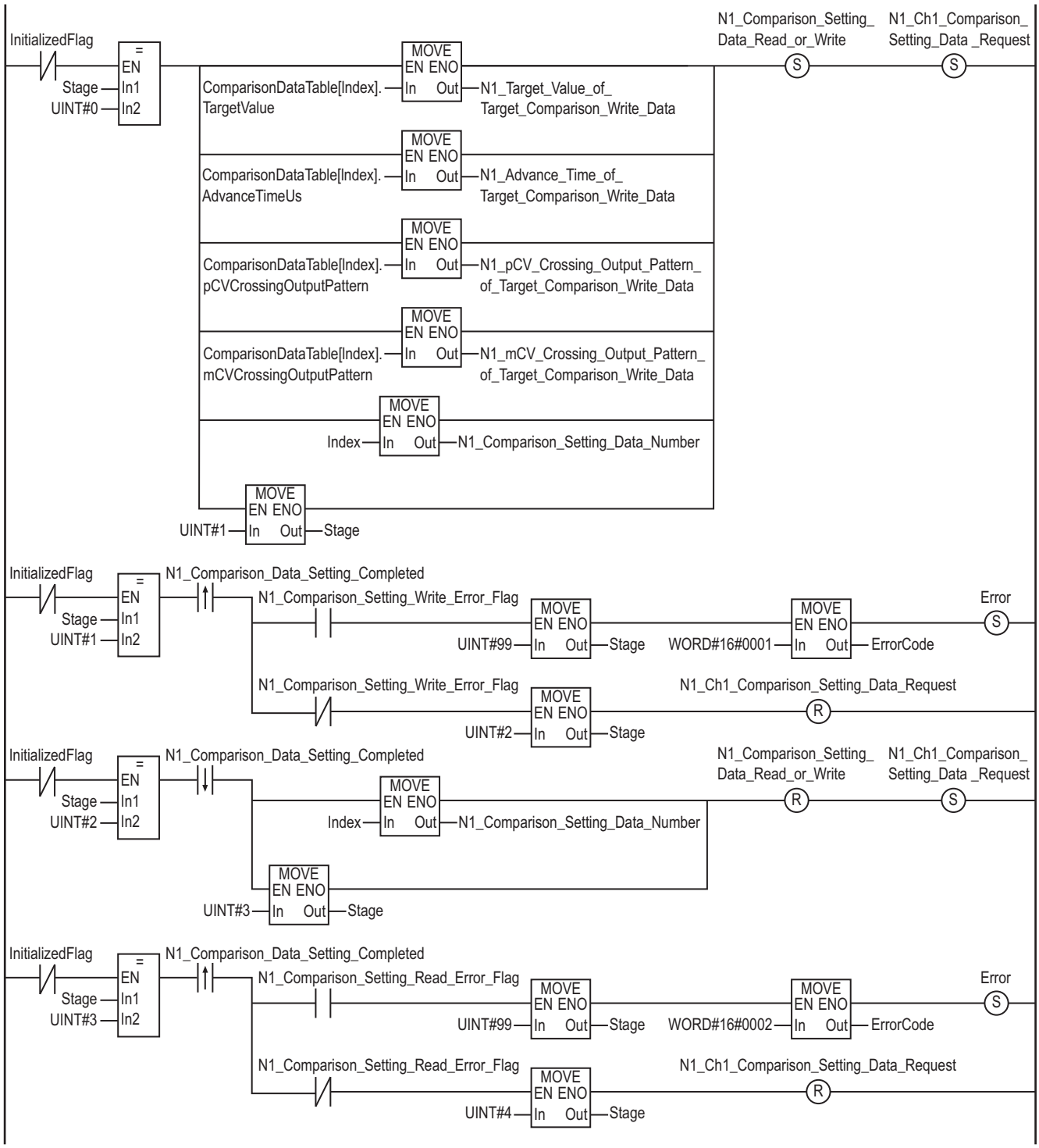

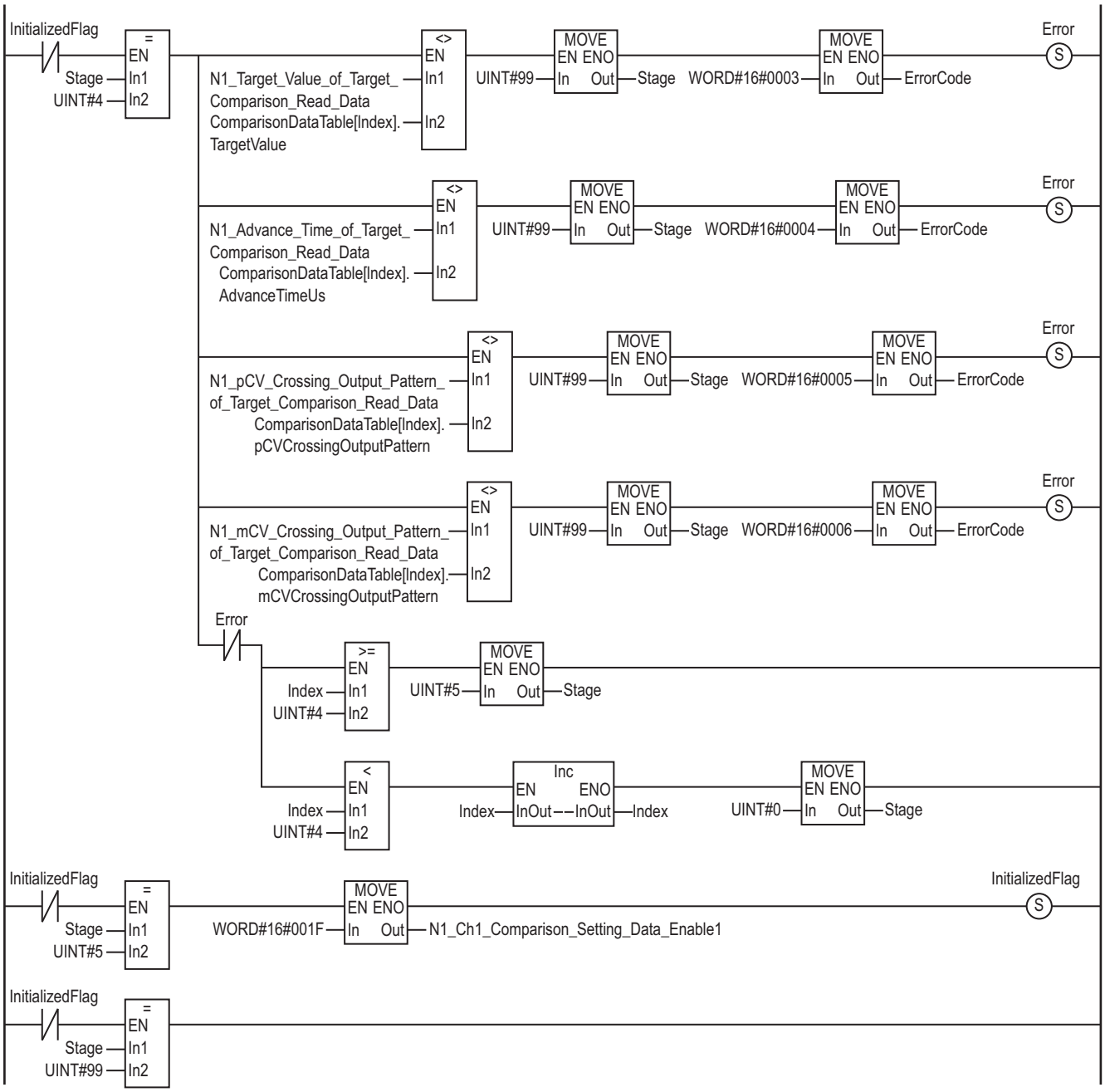

ST

```
IF ( InitializedFlag = FALSE ) THEN
    CASE Stage OF
        0: // Execute Target Comparison Data Write
            N1_Target_Value_of_Target_Comparison_Write_Data := ComparisonDataTable[
Index].TargetValue;
            N1_Advance_Time_of_Target_Comparison_Write_Data := ComparisonDataTable[
Index].AdvanceTimeUs;
            N1_pCV_Crossing_Output_Pattern_of_Target_Comparison_Write_Data := Compa
risonDataTable[Index].pCVCrossingOutputPattern;
```

```
            N1_mCV_Crossing_Output_Pattern_of_Target_Comparison_Write_Data := Compa
risonDataTable[Index].mCVCrossingOutputPattern;

            N1_Comparison_Setting_Data_Number := Index;        // Comparison Settin
g Data Number
            N1_Comparison_Setting_Data_Read_or_Write := TRUE;    // Set comparison
data setting Read/Write to Write
            N1_Ch1_Comparison_Setting_Data_Request := TRUE;        // Comparison da
ta setting request
            Stage := UINT#1;

        1: // Write Error Check
            IF ( N1_Comparison_Data_Setting_Completed = TRUE ) THEN
                IF ( N1_Comparison_Setting_Write_Error_Flag = TRUE ) THEN
                    Stage := UINT#99;            // Error registered
                    Error := TRUE;
                    ErrorCode := WORD#16#0001;
                ELSE
                    N1_Ch1_Comparison_Setting_Data_Request := FALSE;    // Clear co
mparison data setting request
                    Stage := UINT#2;
                END_IF;
            END_IF;

        2: // Execute Comparison Setting Data Number Read
            N1_Comparison_Setting_Data_Number := Index;        // Comparison Settin
g Data Number
            N1_Comparison_Setting_Data_Read_or_Write := FALSE;    // Set comparison
 data setting Read/Write to Read
            N1_Ch1_Comparison_Setting_Data_Request := TRUE;        // Comparison da
ta read request
            Stage := UINT#3;

        3: // Read Error Check
        IF ( N1_Comparison_Data_Setting_Completed = TRUE ) THEN
            IF ( N1_Comparison_Setting_Read_Error_Flag = TRUE ) THEN
                Stage := UINT#99;                // Error registered
                Error := TRUE;
                ErrorCode := WORD#16#0002;
            ELSE
                N1_Ch1_Comparison_Setting_Data_Request := FALSE;    // Clear compar
ison data setting request
                Stage := UINT#4;
            END_IF;
        END_IF;

        4: // Verification check
```

```
            // Verification check of comparison setting data number
            IF ( N1_Target_Value_of_Target_Comparison_Read_Data <> ComparisonDataTa
ble[Index].TargetValue ) THEN
                Stage := UINT#99;                // Error registered
                Error := TRUE;
                ErrorCode := WORD#16#0003;
            // Verification check of target comparison advance time
            ELSIF ( N1_Advance_Time_of_Target_Comparison_Read_Data <> ComparisonDat
aTable[Index].AdvanceTimeUs ) THEN
                Stage := UINT#99;                // Error registered
                Error := TRUE;
                ErrorCode := WORD#16#0004;
            // Verification check of target comparison addition match output patter
n
            ELSIF ( N1_pCV_Crossing_Output_Pattern_of_Target_Comparison_Read_Data <
> ComparisonDataTable[Index].pCVCrossingOutputPattern ) THEN
                Stage := UINT#99;                // Error registered
                Error := TRUE;
                ErrorCode := WORD#16#0005;
            // Verification check of target comparison subtraction match output pat
tern
            ELSIF ( N1_mCV_Crossing_Output_Pattern_of_Target_Comparison_Read_Data <
> ComparisonDataTable[Index].mCVCrossingOutputPattern ) THEN
                Stage := UINT#99;                // Error registered
                Error := TRUE;
                ErrorCode := WORD#16#0006;
            ELSE
                IF ( Index < 4 ) THEN
                    Inc(Index);
                    Stage := UINT#0;
                ELSE
                    Stage := UINT#5;
                END_IF;
            END_IF;

        5: // Comparison Setting Data Enable
            N1_Ch1_Comparison_Setting_Data_Enable1 := WORD#16#001F;    // Compariso
n setting data enabled (0 to 4)
            InitializedFlag := TRUE;

        99: // Error generated
        ;    // Processing when error generated
    END_CASE;
END_IF;
```

A-4-3 2ch Mode Writing/Reading Range Comparison Data

This section describes the program that writes, reads, and verifies comparison data and then enables comparison setting data for 2ch mode range comparison.
Setting examples are shown in the following table.

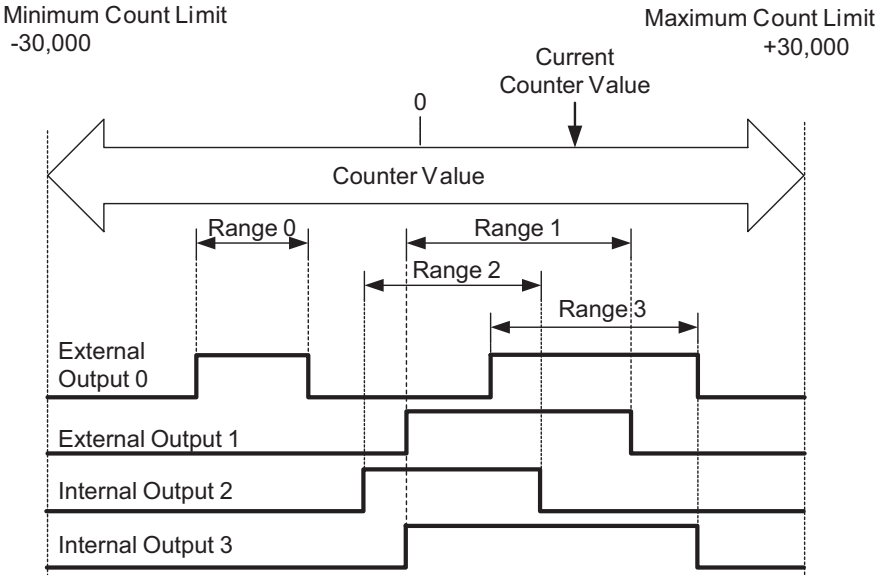

Range	Lower Range Limit	Upper Range Limit	Output ON
0	- 20,000	- 10,000	0
1	- 1,000	19,000	1, 3
2	- 5,000	11,000	2
3	6,000	25,000	0, 3

Unit Operation Settings

Unit operation settings set by program for the High-speed Counter Unit are shown below. For items not listed in the table, use the default value.

Setting	Set value	Meaning of setting
Comparison Function Mode	1	Range Comparison Mode

I/O Map

The following table shows the settings of variables that are assigned to the I/O Map in Sysmac Studio.

I/O port name	Variable name	Description	Data type	Variable type
Lower Limit Value of Range Comparison Write Data	N1_Lower_Limit_Value_of_Range_Comparison_Write_Data	Lower limit value of range comparison write data.	DINT	Global variable
Upper Limit Value of Range Comparison Write Data	N1_Upper_Limit_Value_of_Range_Comparison_Write_Data	Upper limit value of range comparison write data.	DINT	Global variable
Output Pattern of Range Comparison Write Data	N1_Output_Pattern_of_Range_Comparison_Write_Data	Aggregated range comparison output pattern write data.	WORD	Global variable

I/O port name	Variable name	Description	Data type	Variable type
Comparison Setting Data Number	N1_Comparison_Setting_Data_Number	Comparison setting data number when using comparison setting commands.	UINT	Global variable
Comparison Setting Data Read or Write	N1_Comparison_Setting_Data_Read_or_Write	Comparison setting data read/write.	BOOL	Global variable
Ch1 Comparison Setting Data Request	N1_Ch1_Comparison_Setting_Data_Request	Executes Ch1 comparison data read/write.	BOOL	Global variable
Comparison Data Setting Completed	N1_Comparison_Data_Setting_Completed	Comparison data setting completed.	BOOL	Global variable
Comparison Setting Write Error Flag	N1_Comparison_Setting_Write_Error_Flag	Comparison setting write error flag.	BOOL	Global variable
Comparison Setting Read Error Flag	N1_Comparison_Setting_Read_Error_Flag	Comparison setting read error flag.	BOOL	Global variable
Lower Limit Value of Range Comparison Read Data	N1_Lower_Limit_Value_of_Range_Comparison_Read_Data	Lower limit value of range comparison read data.	DINT	Global variable
Upper Limit Value of Range Comparison Read Data	N1_Upper_Limit_Value_of_Range_Comparison_Read_Data	Upper limit value of range comparison read data.	DINT	Global variable
Output Pattern of Range Comparison Read Data	N1_Output_Pattern_of_Range_Comparison_Read_Data	Aggregated range comparison output pattern read data.	WORD	Global variable
Ch1 Comparison Setting Data Enable1	N1_Ch1_Comparison_Setting_Data_Enable1	Aggregated Ch1 comparison setting data enable1 data.	WORD	Global variable

Variable Table

External variables and internal variables that are used in the programming are given below.

● Data Type (Structure)

Name	Data type	Offset type	Description
RangeComparisonData	STRUCT	NJ	Range comparison data.
LowerLimitValue	DINT	---	Lower limit value of range comparison write data.
UpperLimitValue	DINT	---	Upper limit value of range comparison write data.
OutputPattern	WORD	---	Output pattern of range comparison write data.

● External Variables

Variable name	Data type	Default value	AT specification	Retain	Constant	Network Publish	Description
N1_Lower_Limit_Value_of_Range_Comparison_Write_Data	DINT	0	---	---	---	Do not publish.	Lower limit value of range comparison write data.
N1_Upper_Limit_Value_of_Range_Comparison_Write_Data	DINT	0	---	---	---	Do not publish.	Upper limit value of range comparison write data.

Variable name	Data type	Default value	AT specification	Retain	Constant	Network Publish	Description
N1_Output_Pattern_of_Range_Comparison_Write_Data	WORD	16#0000	---	---	---	Do not publish.	Aggregated range comparison output pattern write data.
N1_Comparison_Setting_Data_Number	UINT	0	---	---	---	Do not publish.	Comparison setting data number when using comparison setting commands.
N1_Comparison_Setting_Data_Read_or_Write	BOOL	False	---	---	---	Do not publish.	Comparison setting data read/write.
N1_Ch1_Comparison_Setting_Data_Request	BOOL	False	---	---	---	Do not publish.	Executes Ch1 comparison data read/write.
N1_Comparison_Data_Setting_Completed	BOOL	False	---	---	---	Do not publish.	Comparison data setting completed.
N1_Comparison_Setting_Write_Error_Flag	BOOL	False	---	---	---	Do not publish.	Comparison setting write error flag.
N1_Comparison_Setting_Read_Error_Flag	BOOL	False	---	---	---	Do not publish.	Comparison setting read error flag.
N1_Lower_Limit_Value_of_Range_Comparison_Read_Data	DINT	0	---	---	---	Do not publish.	Lower limit value of range comparison read data.
N1_Upper_Limit_Value_of_Range_Comparison_Read_Data	DINT	0	---	---	---	Do not publish.	Upper limit value of range comparison read data.
N1_Output_Pattern_of_Range_Comparison_Read_Data	WORD	16#0000	---	---	---	Do not publish.	Aggregated range comparison output pattern read data.
N1_Ch1_Comparison_Setting_Data_Enable1	WORD	16#0000	---	---	---	Do not publish.	Aggregated Ch1 comparison setting data enable1 data.

● Internal Variables

Variable name	Data type	Default value	AT specification	Retain	Constant	Description
ComparisonDataTable	ARRAY[0..3] OF RangeComparisonData	[(LowerLimitValue := -20000, UpperLimitValue := -10000, OutputPattern := 16#0001), (LowerLimitValue := -1000, UpperLimitValue := 19000, OutputPattern := 16#000A), (LowerLimitValue := -5000, UpperLimitValue := 11000, OutputPattern := 16#0004), (LowerLimitValue := 6000, UpperLimitValue := 25000, OutputPattern := 16#0009)]	---	---	---	Range comparison data setting value.
InitializedFlag	BOOL	False	---	---	---	Initialized flag.

Variable name	Data type	Default value	AT specification	Retain	Constant	Description
Stage	UINT	0	---	---	---	Internal status of program.
Index	UINT	0	---	---	---	Setting table offset position.
Error	BOOL	False	---	---	---	Error flag.
ErrorCode	WORD	16#0000	---	---	---	Error code.

Ladder Programming

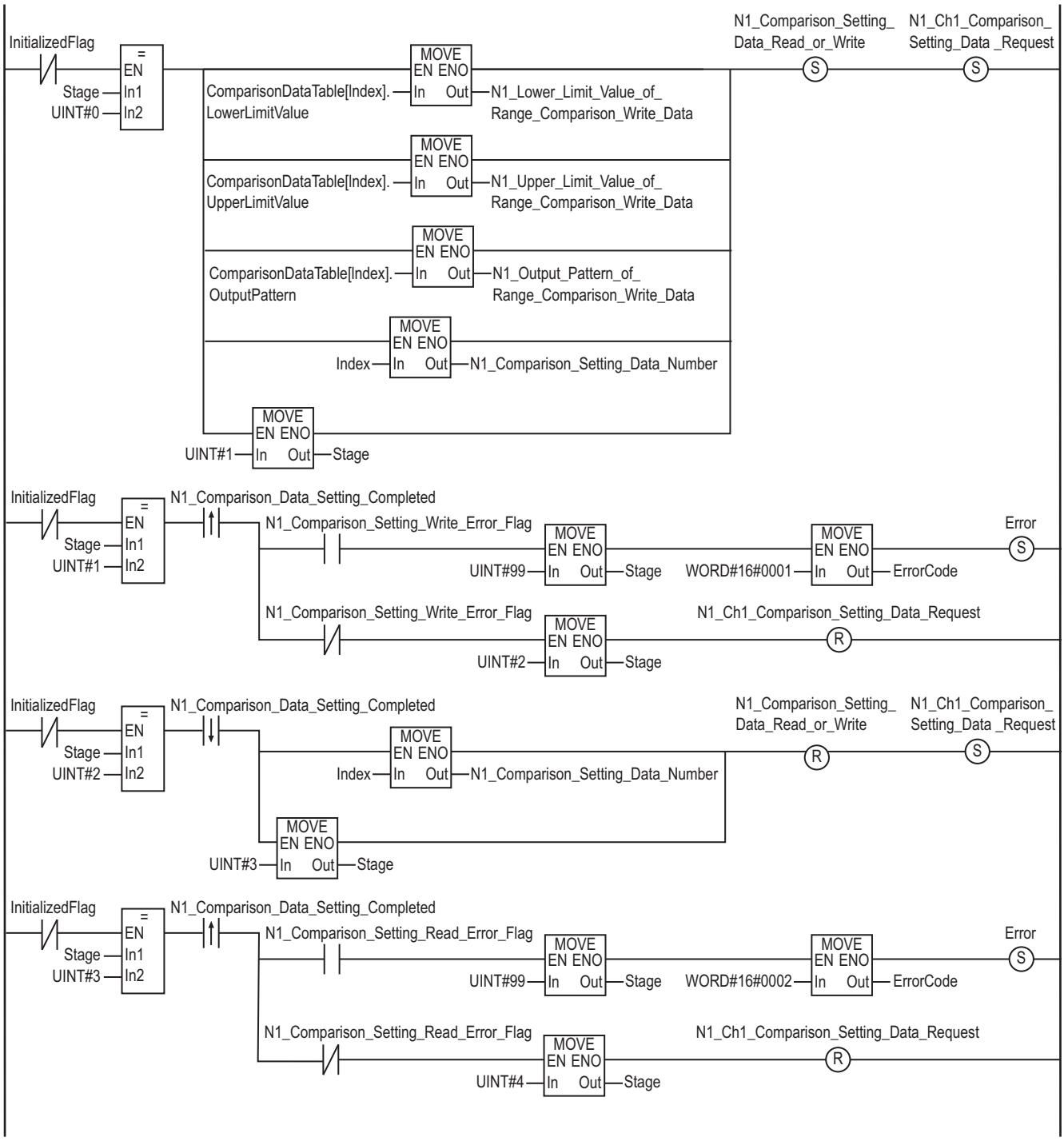

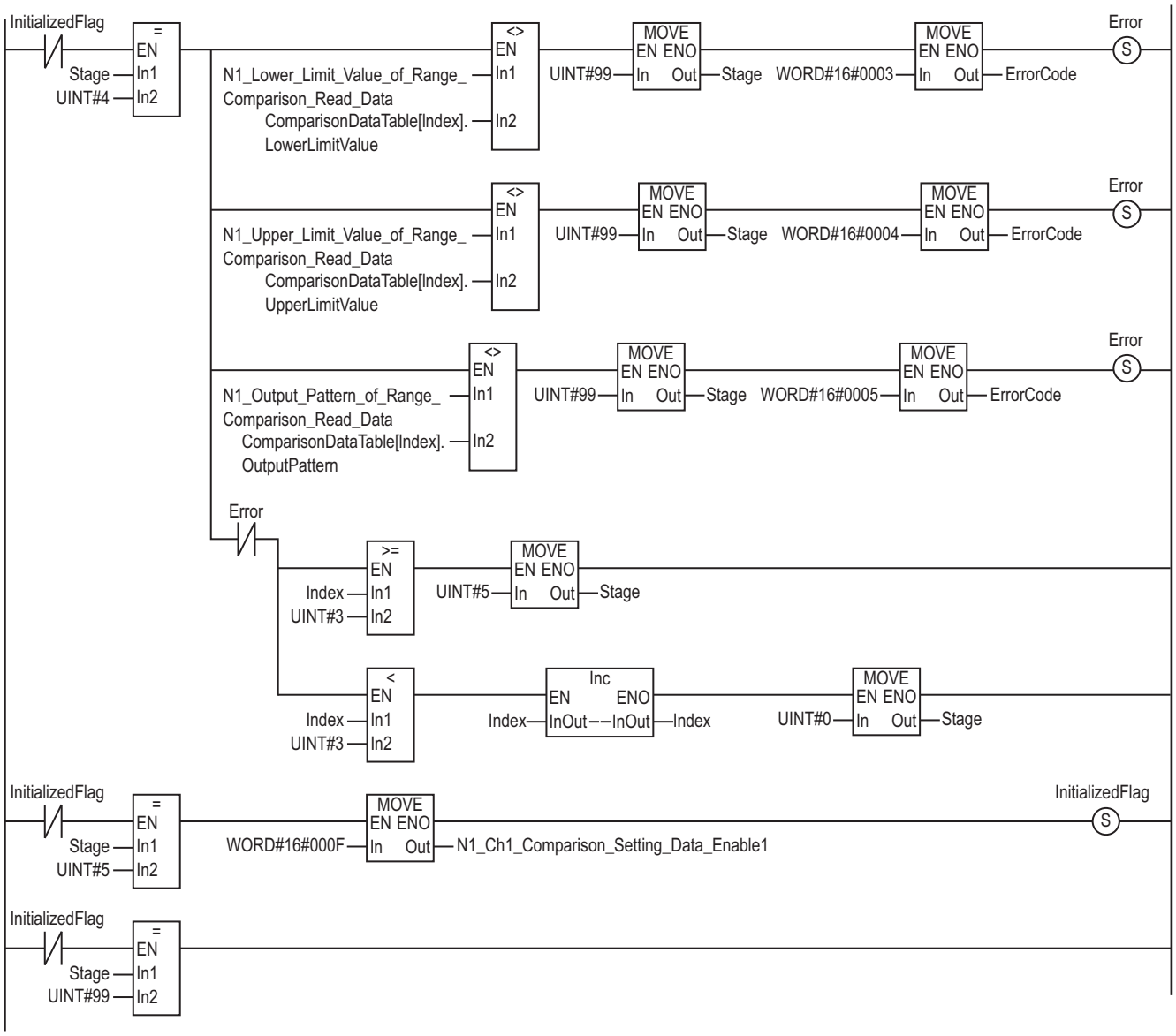

ST

```
IF ( InitializedFlag = FALSE ) THEN
    CASE Stage OF
        0: // Execute Range Comparison Data Write
            N1_Lower_Limit_Value_of_Range_Comparison_Write_Data := ComparisonDataTa
ble[Index].LowerLimitValue;
            N1_Upper_Limit_Value_of_Range_Comparison_Write_Data := ComparisonDataTa
ble[Index].UpperLimitValue;
            N1_Output_Pattern_of_Range_Comparison_Write_Data := ComparisonDataTabl
e[Index].OutputPattern;

            N1_Comparison_Setting_Data_Number := Index;        // Comparison Settin
g Data Number
            N1_Comparison_Setting_Data_Read_or_Write := TRUE;    // Set Comparison
```

```
Data Setting Read/Write to Write
            N1_Ch1_Comparison_Setting_Data_Request := TRUE;        // Comparison Da
ta Setting Request
            Stage := UINT#1;

        1: // Write Error Check
            IF ( N1_Comparison_Data_Setting_Completed = TRUE ) THEN
                IF ( N1_Comparison_Setting_Write_Error_Flag = TRUE ) THEN
                    Stage := UINT#99;            // Error registered
                    Error := TRUE;
                    ErrorCode := WORD#16#0001;
                ELSE
                    N1_Ch1_Comparison_Setting_Data_Request := FALSE;    // Clear Co
mparison Data Setting Request
                    Stage := UINT#2;
                END_IF;
            END_IF;

        2: // Execute Range Comparison Data Read
            N1_Comparison_Setting_Data_Number := Index;        // Comparison Settin
g Data Number
            N1_Comparison_Setting_Data_Read_or_Write := FALSE;    // Set Comparison
 Data Setting Read/Write to Read
            N1_Ch1_Comparison_Setting_Data_Request := TRUE;        // Comparison Da
ta Read Request
            Stage := UINT#3;

        3: // Read Error Check
            IF ( N1_Comparison_Data_Setting_Completed = TRUE ) THEN
                IF ( N1_Comparison_Setting_Read_Error_Flag = TRUE ) THEN
                    Stage := UINT#99;            // Error registered
                    Error := TRUE;
                    ErrorCode := WORD#16#0002;
                ELSE
                    N1_Ch1_Comparison_Setting_Data_Request := FALSE;    // Clear Co
mparison Data Setting Request
                    Stage := UINT#4;
                END_IF;
            END_IF;

        4: // Verification Check
            // Range comparison lower limit verification check
            IF ( N1_Lower_Limit_Value_of_Range_Comparison_Read_Data <> ComparisonDa
taTable[Index].LowerLimitValue ) THEN
                Stage := UINT#99;                // Error registered
                Error := TRUE;
                ErrorCode := WORD#16#0003;
```

```
            // Range comparison upper limit verification check
            ELSIF ( N1_Upper_Limit_Value_of_Range_Comparison_Read_Data <> Compariso
nDataTable[Index].UpperLimitValue ) THEN
                Stage := UINT#99;                // Error registered
                Error := TRUE;
                ErrorCode := WORD#16#0004;
            // Range comparison output pattern verification check
            ELSIF ( N1_Output_Pattern_of_Range_Comparison_Read_Data <> ComparisonDa
taTable[Index].OutputPattern ) THEN
                Stage := UINT#99;                // Error registered
                Error := TRUE;
                ErrorCode := WORD#16#0005;
            ELSE
                IF ( Index < 3 ) THEN
                    Inc(Index);
                    Stage := UINT#0;
                ELSE
                    Stage := UINT#5;
                END_IF;
            END_IF;

        5: // Comparison Setting Data Enable
            N1_Ch1_Comparison_Setting_Data_Enable1 := WORD#16#000F;    // Compariso
n setting data enabled (0 to 3)
            InitializedFlag := TRUE;

        99: // Error generated
            ; // Processing when error generated
    END_CASE;
END_IF;
```

A-5 Advance Time Error

This section describes advance time error in target comparison.

- When counting at a fixed speed, advance time error will be the total of the following 2 errors.
  - Error due to counter resolution
  - Counter value calculation error per 1 μs

These 2 errors are explained below.

A-5-1 Errors Due to Counter Resolution

Advance time for addition matching is realized by correcting the target value within the Unit as below.

Target value in addition matching = target value as set) - (advance time set value) × (count value per 1 μs)

However, because the counter value is an integer, when the input pulse frequency is low, the advance time error normally increases. For example, when the input frequency is 1 kHz (1 ms cycle), target comparison only takes place at 1 ms, so an error of up to ±0.5 ms is generated.

In order to minimize advance time error, this Unit is equipped with a function using linear interpolation to divide each count into up to 128 parts.
This operation description uses a 128 split as an example.

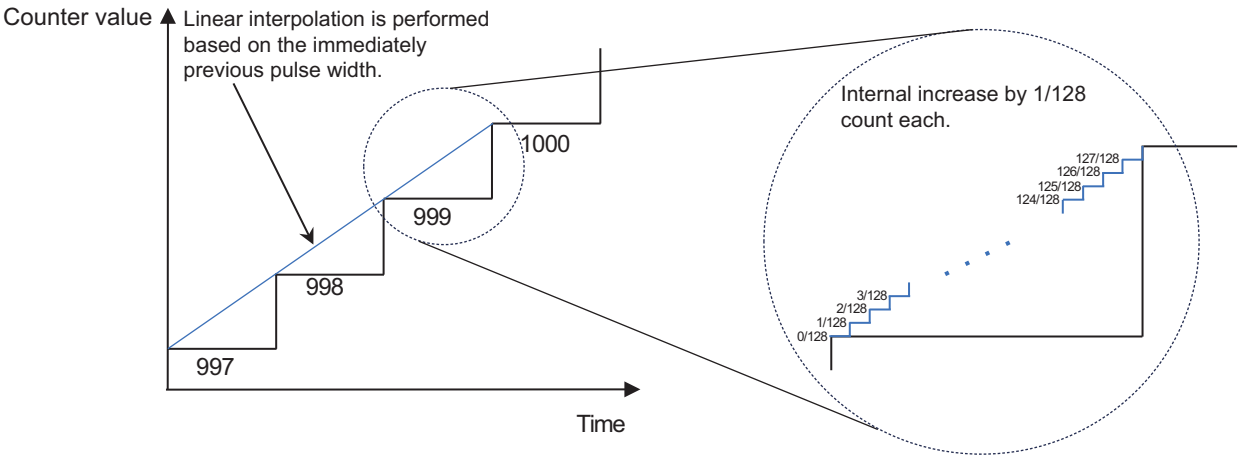

Let us say that the input frequency is 1 kHz (1000 μs cycle), the target value is 1000, and the set advance time is 504 μs.
When the frequency is 1 kHz, (count value per 1 μs) = 0.001 count, so the target value corrected for advance time is as below.

Target value at addition matching = 1000 - 504 × 0.001 = 1000 - 0.504 ≈ 1000 - 65/128

Because the input pulse frequency is 1000 μs, the advance time in this case is 65/128 × 1000 μs = approximately 508 μs. Therefore, the error against the set 504 μs is approximately 4 μs.

The number of divisions due to linear interpolation varies according to the input frequency.
Depending on the input frequency, the number of divisions is as follows.

When F < 1 Hz	: No interpolation
When 1 Hz ≤ F < 7.8125 kHz	: Interpolation with division into 128
When 7.8125 kHz ≤ F < 62.5 kHz	: Interpolation with division into 16

When 62.5 kHz ≤ F : No interpolation

F: Input frequency (kHz)

When operating at a fixed speed, the maximum advance time error can be calculated as below.

When F < 1 Hz : ±1/F ms or below
When 1 Hz ≤ F < 7.8125 kHz : ±(1/(F×128) + 0.001) ms or below
When 7.8125 kHz ≤ F < 62.5 kHz : ±(1/(F×16) + 0.001) ms or below
When 62.5 kHz ≤ F : ±1/F ms or below

F: Input frequency (kHz)

Sample errors for typical frequencies are shown below.

Input frequency	Error
1 Hz	±7814 μs max.
10 Hz	±783 μs max.
100 Hz	±80 μs max.
1 kHz	±9 μs max.
10 kHz	±8 μs max.
100 kHz	±10 μs max.

A-5-2 Counter Value Calculation Error per 1 μs

Error is generated in the counter value per 1 μs depending on the advance time range setting. The resulting advance time error can be calculated as below.

Advance Time Range Setting	Error (μs)
0: 0.256 ms	± Advance time setting (μs) × (1/0.256) × (1/F) max.
1: 0.512 ms	± Advance time setting (μs) × (1/0.512) × (1/F) max.
2: 1.024 ms	± Advance time setting (μs) × (1/1.024) × (1/F) max.
3: 2.048 ms	± Advance time setting (μs) × (1/2.048) × (1/F) max.
4: 4.096 ms	± Advance time setting (μs) × (1/4.096) × (1/F) max.
5: 8.192 ms	± Advance time setting (μs) × (1/8.192) × (1/F) max.
6: 16.384 ms	± Advance time setting (μs) × (1/16.384) × (1/F) max.
7: 32.768 ms	± Advance time setting (μs) × (1/32.768) × (1/F) max.
8: 65.536 ms	± Advance time setting (μs) × (1/65.536) × (1/F) max.
9: 131.072 ms	± Advance time setting (μs) × (1/131.072) × (1/F) max.
10: 524.288 ms	± Advance time setting (μs) × (1/524.288) × (1/F) max.
11: 2097.152 ms	± Advance time setting (μs) × (1/2097.152) × (1/F) max.
12: 8388.608 ms	± Advance time setting (μs) × (1/8388.608) × (1/F) max.

F: Input frequency (kHz)

When the advance time is set to 1000 µs, examples of error at representative frequencies are shown for each advance time range setting.

Advance Time Range Setting	Error (advance time setting = 1000 µs)					
	1 Hz	10 Hz	100 Hz	1 kHz	10 kHz	100 kHz
0: 0.256 ms	Setting prohibited*1				±391 µs max.	±40 µs max.
1: 0.512 ms	Setting prohibited*1				±196 µs max.	±20 µs max.
2: 1.024 ms	Setting prohibited*1			±977 µs max.	±98 µs max.	±10 µs max.
3: 2.048 ms	Setting prohibited*1			±489 µs max.	±49 µs max.	±5 µs max.
4: 4.096 ms	Setting prohibited*1			±245 µs max.	±25 µs max.	±3 µs max.
5: 8.192 ms	Setting prohibited*1			±123 µs max.	±13 µs max.	±2 µs max.
6: 16.384 ms	Setting prohibited*1		±611 µs max.	±62 µs max.	±7 µs max.	±1 µs max.
7: 32.768 ms	Setting prohibited*1		±306 µs max.	±31 µs max.	±4 µs max.	±1 µs max.
8: 65.536 ms	Setting prohibited*1		±153 µs max.	±16 µs max.	±2 µs max.	±1 µs max.
9: 131.072 ms	Setting prohibited*1	±763 µs max.	±77 µs max.	±8 µs max.	±1 µs max.	±1 µs max.
10: 524.288 ms	Setting prohibited*1	±191 µs max.	±20 µs max.	±2 µs max.	±1 µs max.	±1 µs max.
11: 2097.152 ms	±477 µs max.	±48 µs max.	±5 µs max.	±1 µs max.	±1 µs max.	±1 µs max.
12: 8388.608 ms	±120 µs max.	±12 µs max.	±2 µs max.	±1 µs max.	±1 µs max.	±1 µs max.

*1. Within the advance time range, setting so that at least a 1-count pulse is invariably input is required. Therefore, do not set in this way. If set this way, advance time operation will not be correctly executed.

Increasing the advance time range setting value will reduce the error due to the counter value per 1 µs. However, the error upon sudden acceleration/deceleration will be larger. Check the error before deciding on the advance time range setting value.

A-6 Version Information with CPU Units

This section provides version-related information when connecting Units to a CPU Unit. This section describes the relationships between the unit versions of each Unit and the CPU Unit, and Sysmac Studio version, and the specification changes for each unit version of each Unit.

A-6-1 Relationship between Unit Versions of Units

The relationship between the unit versions of each Unit and the CPU Unit, and Sysmac Studio version are shown below.

Interpreting the Version Combination Table

The items that are used in the version combination table are given below.
Refer to the user's manual for the CPU Unit for the models of CPU Unit to which NX Units can be connected.

NX Unit		Corresponding unit versions/versions	
Model	Unit version	CPU Unit	Sysmac Studio
Model numbers of NX Units.	Unit versions of NX Units.	Unit versions of the CPU Unit that are compatible with the NX Units.	Sysmac Studio versions that are compatible with the NX Units and CPU Unit.

Version Combination Tables

- With the combinations of the unit versions/versions shown below, you can use the functions that are supported by the unit version of the Unit model. Use the unit versions/versions (or the later/higher unit versions/versions) that correspond to the NX Unit models and the unit versions. You cannot use the specifications that were added or changed for the relevant NX Unit models and the unit versions unless you use the corresponding unit versions/versions.
- Depending on the type and model of the Unit to which the NX Unit is connected, some Units do not have the corresponding versions given in the table. If a Unit does not have the specified version, support is provided by the oldest available version after the specified version. Refer to the user's manuals for the specific Units for the relation between models and versions.
- If you use the corresponding unit versions/versions given in the following table or later/higher versions, refer to the version information in the user's manual for the CPU Unit.

NX Units		Corresponding unit versions	
Model	Unit version	CPU Units	Sysmac Studio
NX-CT2120	Ver.1.0	Ver.1.13	Ver.1.65
NX-CT2220			
NX-CT2320			
NX-CT2420			

A-7 Version Information with Communications Coupler Units

This section provides version-related information when connecting Units to a Communications Coupler Unit. Version information is provided separately for each Communications Coupler Unit that an NX Unit is connected to.

A-7-1 Connection to an EtherCAT Coupler Unit

This section describes the relationship between the unit versions of each Unit, EtherCAT Coupler Unit, CPU Unit and Industrial PC, versions of the Sysmac Studio, and the specification changes for each unit version.

Relationship between Unit Versions of Units

The items that are used in the version combination table are given below.

NX Unit		Corresponding unit versions/versions		
Model	Unit version	EtherCAT Coupler Unit	CPU Unit or Industrial PC	Sysmac Studio
Model numbers of NX Units.	Unit versions of NX Units.	Unit versions of EtherCAT Coupler Units that are compatible with the NX Units.	Unit versions of NJ/NX-series CPU Units or NY-series Industrial PCs that are compatible with the EtherCAT Coupler Units.	Sysmac Studio versions that are compatible with the NX Units, EtherCAT Coupler Units, CPU Units, and Industrial PCs.

The version combination table is given below.

- With the combinations of the unit versions/versions shown below, you can use the functions that are supported by the unit version of the Unit model. Use the unit versions/versions (or the later/higher unit versions/versions) that correspond to the NX Unit models and the unit versions. You cannot use the specifications that were added or changed for the relevant NX Unit models and the unit versions unless you use the corresponding unit versions/versions.
- Depending on the type and model of the Unit to which the NX Unit is connected, some Units do not have the corresponding versions given in the table. If a Unit does not have the specified version, support is provided by the oldest available version after the specified version. Refer to the user's manuals for the specific Units for the relation between models and versions.
- You cannot connect the relevant NX Unit to the target Communications Coupler Unit if "---" is shown in the corresponding unit versions/versions column.
- If you use the corresponding unit versions/versions given in the following table or later/higher versions, refer to the version information in the user's manual for the Communications Coupler Unit, CPU Unit, and Industrial PC.

NX Units		Corresponding unit versions		
Model	Unit version	EtherCAT Coupler Unit	CPU Unit or Industrial PC	Sysmac Studio
NX-CT2120	Ver.1.0	Ver.1.0	Ver.1.05	Ver.1.65
NX-CT2220				
NX-CT2320				
NX-CT2420				

A-7-2 Connection to an EtherNet/IP Coupler Unit

This section describes the relationship between the unit versions of each Unit, EtherNet/IP Coupler Unit, CPU Unit and Industrial PC, versions of the Sysmac Studio and NX-IO Configurator, and the specification changes for each unit version.

Relationship between Unit Versions of Units

The items that are used in the version combination table are given below.

NX Unit		Corresponding unit versions/versions					
		Application with an NJ/NX/NY-series Controller			Application with a CS/CJ/CP-series PLC		
Model	Unit version	EtherNet/IP Coupler Unit	CPU Unit or Industrial PC	Sysmac Studio	EtherNet/IP Coupler Unit	Sysmac Studio	NX-IO Configurator
Model number of NX Unit.	Unit version of the NX Unit.	Unit version of EtherNet/IP Coupler Unit that is compatible with the NX Unit.	Unit version of NJ/NX-series CPU Unit or NY-series Industrial PC that is compatible with the EtherNet/IP Coupler Unit.	Sysmac Studio version that is compatible with the NX Unit, EtherNet/IP Coupler Unit, CPU Unit, and Industrial PC.	Unit version of EtherNet/IP Coupler Unit that is compatible with the NX Unit.	Sysmac Studio version that is compatible with the NX Unit, EtherNet/IP Coupler Unit, and CPU Unit.	NX-IO Configurator version that is compatible with the NX Unit, EtherNet/IP Coupler Unit, and CPU Unit.

The version combination table is given below.

- With the combinations of the unit versions/versions shown below, you can use the functions that are supported by the unit version of the Unit model. Use the unit versions/versions (or the later/higher unit versions/versions) that correspond to the NX Unit models and the unit versions. You cannot use the specifications that were added or changed for the relevant NX Unit models and the unit versions unless you use the corresponding unit versions/versions.
- Depending on the type and model of the Unit to which the NX Unit is connected, some Units do not have the corresponding versions given in the table. If a Unit does not have the specified version, support is provided by the oldest available version after the specified version. Refer to the user's manuals for the specific Units for the relation between models and versions.
- You cannot connect the relevant NX Unit to the target Communications Coupler Unit if "---" is shown in the corresponding unit versions/versions column.

- If you use the corresponding unit versions/versions given in the following table or later/higher versions, refer to the version information in the user's manual for the Communications Coupler Unit, CPU Unit, and Industrial PC.

NX Units		Corresponding unit versions					
Model	Unit version	Use with an NJ/NX/NY-series Controller*1			Application with an CS/CJ/CP-series PLC*2		
		EtherNet/IP Coupler Unit	CPU Unit or Industrial PC	Sysmac Studio	EtherNet/IP Coupler Unit	Sysmac Studio	NX-IO Configurator*3
NX-CT2120	Ver.1.0	Ver.1.0	Ver.1.05	Ver.1.65	Ver.1.0	Ver.1.65	Ver.1.25
NX-CT2220							
NX-CT2320							
NX-CT2420							

*1. Refer to version information in the user's manual of the EtherNet/IP Coupler Unit for the unit versions of EtherNet/IP Units corresponding to EtherNet/IP Coupler Units.
*2. Refer to version information in the user's manual of the EtherNet/IP Coupler Unit for the unit versions of CPU Units and EtherNet/IP Units corresponding to EtherNet/IP Coupler Units.
*3. For connection to an EtherNet/IP Coupler Unit with unit version 1.0, connection is supported only for a connection to the peripheral USB port on the EtherNet/IP Coupler Unit. You cannot connect by any other path. If you need to connect by another path, use an EtherNet/IP Coupler Unit with unit version 1.2 or later.

A-8 Displaying the Edit Unit Operation Settings Tab Page

A-8-1 Connection to the CPU Unit

This section describes how to display the Edit Unit Operation Settings Tab Page when you edit Unit operation settings on the Sysmac Studio for NX Units connected to the CPU Unit.
You can use the methods described below to display the Edit Unit Operation Settings Tab Page via the CPU and Expansion Racks Tab Page on the Sysmac Studio.
Refer to the *Sysmac Studio Version 1 Operation Manual (Cat. No. W504)* for the method of displaying the CPU and Expansion Racks Tab Page.

● Method 1

Double-click the NX Unit to set.

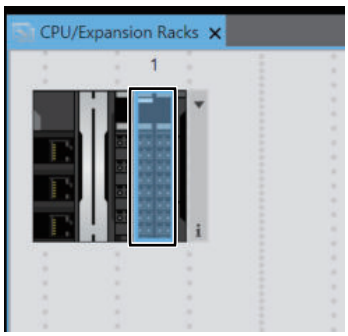

● Method 2

Right-click the NX Unit and select **Edit Unit Operation Settings** from the menu.

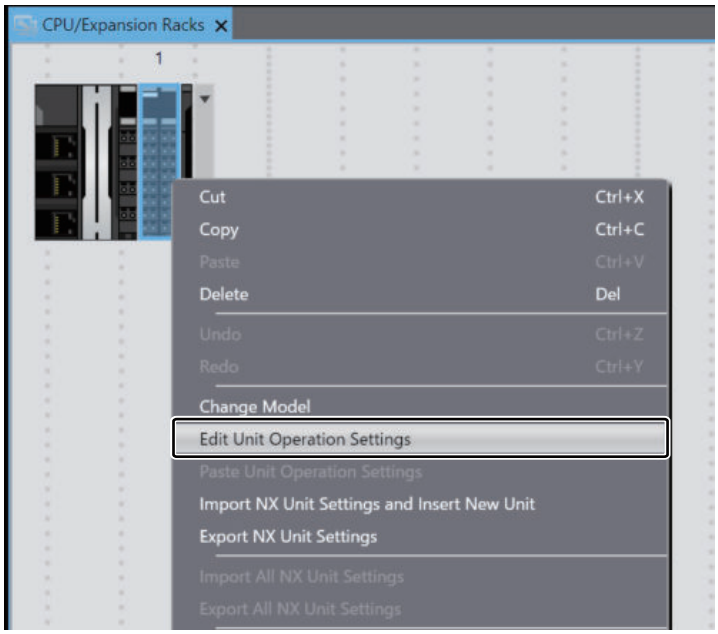

● Method 3

Select the NX Unit and click the **Edit Unit Operation Settings** Button.

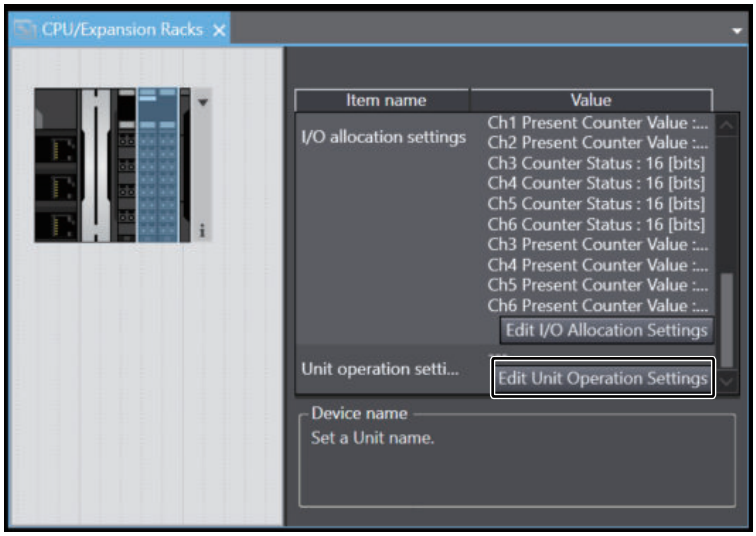

A-8-2 Slave Terminal

This section describes how to display the Edit Unit Operation Settings Tab Page when you edit Unit operation settings on the Sysmac Studio for NX Units configured as a Slave Terminal.
You can use the methods described below to display the Edit Unit Operation Settings Tab Page via the Edit Slave Terminal Configuration Tab Page on the Sysmac Studio.
Refer to the *Sysmac Studio Version 1 Operation Manual (Cat. No. W504)* for how to display the Edit Slave Terminal Configuration Tab Page.

● Method 1

Double-click the NX Unit to set.

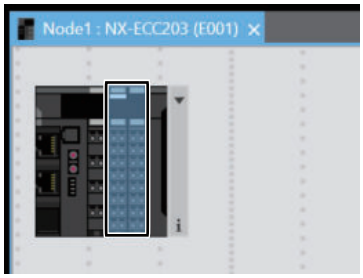

Method 2

Right-click the NX Unit and select **Edit Unit Operation Settings** from the menu.

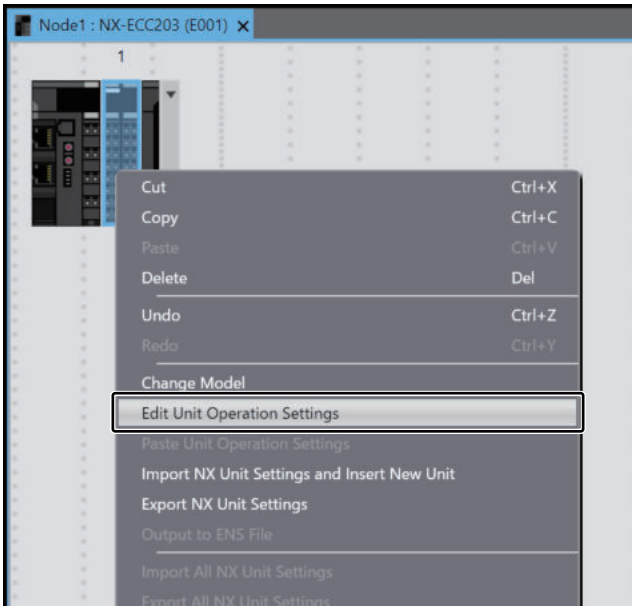

Method 3

Select the NX Unit and click the **Edit Unit Operation Settings** Button.

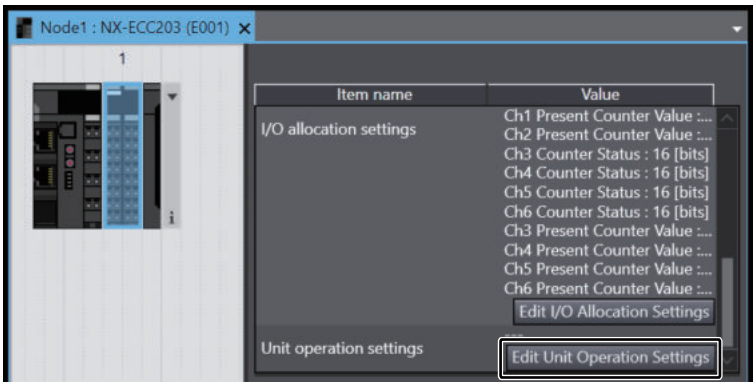

A-9 Edit Unit Operation Settings Tab Page

The Sysmac Studio Edit Unit Operation Settings Tab Page is as displayed below. For details on the Edit Unit Operation Settings Tab Page with support software other than Sysmac Studio, refer to the operation manual for the support software in use.

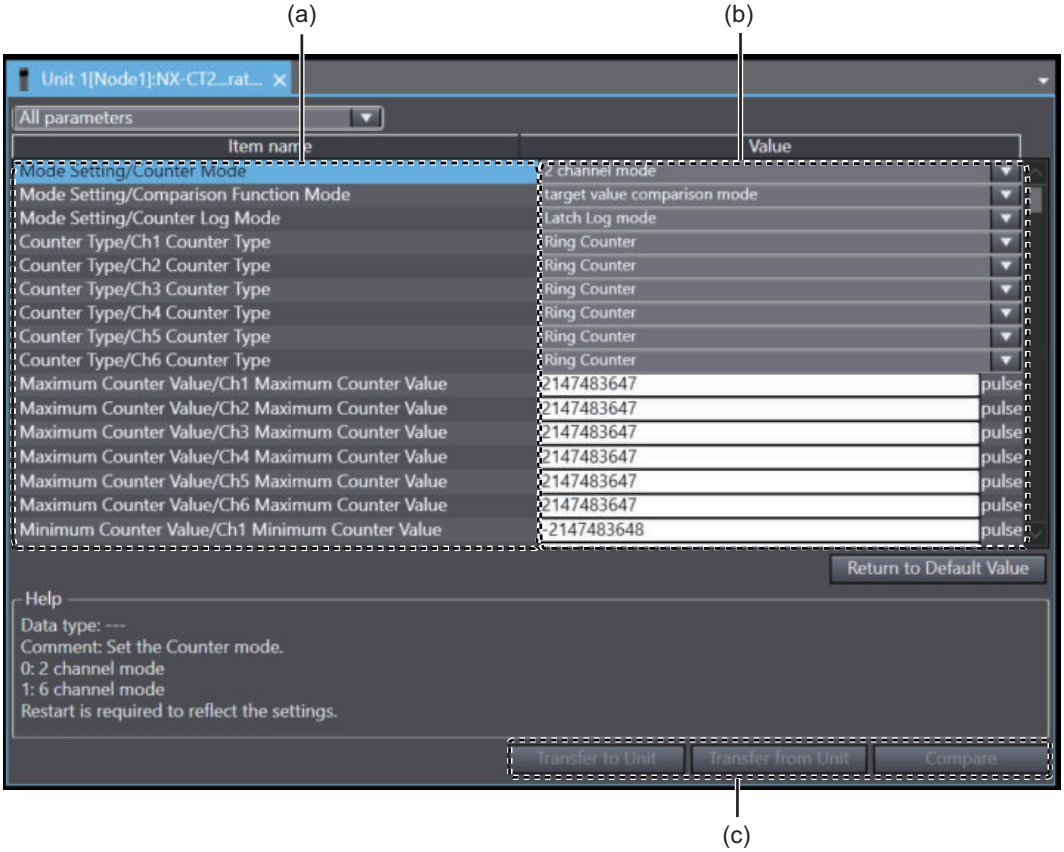

Symbol	Meaning
(a)	Unit operation settings items.
(b)	Settings item set value. To set, select a set value from the list or enter a set value in the text box.
(c)	Transfer or comparison button. When transferring unit operation settings from Sysmac Studio to the NX Unit, click the **Transfer [Computer to Unit]** button.

Additional Information

- Click the list button on the Edit Unit Operation Settings Tab Page to restrict the items that are displayed. An example for Ch1 Counter Type is provided below.

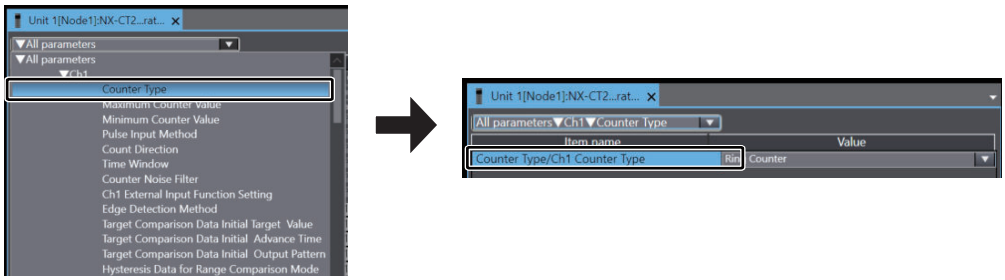

Select Counter Type under Ch1.

Only the Ch1 Counter Type is displayed.

- When setting a value different from the default value, the **set value** on Sysmac Studio is displayed in a different color.
- Click the **Return to Default Value** Button to return all set values on Sysmac Studio to the default values.
- Help for the settings is displayed at the bottom of the Edit Unit Operation Settings Tab Page.

I

Index

Index

A

Access....A-28
Additional I/O Power Supply Units....4-4
Additional NX Unit Power Supply Units....4-4
angle for insertion....4-10, 4-13
Applicable Wire....4-6
assumed cause....8-7 – 8-10

B

built-in EtherCAT port....6

C

Coding Pin....4-16
Communications Coupler Unit....1-6
Communications Master Unit....5-3
Counter Input/External Input Power Supply....4-3
CPU Rack....1-6
CPU Unit....5-3
crimping tool....4-7
Current Error....8-5

D

Data attribute....A-28
Data range....A-28
Data type....A-28
DC enable....5-8
Default value....A-28
DIN Track mounting hook....3-2

E

Error Table....8-6
event code....8-7 – 8-10
event name....8-7 – 8-10
External Output Power Supply....4-3

F

Ferrule....4-7

G

Ground terminal....4-7, 4-8

I

I/O allocation....A-28
I/O entries....6-2
I/O Power Supply Connection Units....4-4
I/O power supply terminal....4-4
incorrect attachment prevention hole....4-18
Index....A-28
Indicator....3-2
Industrial PC....5

L

Log of Past Errors....8-5

M

Marker attachment location....3-2
Maximum I/O power supply current....4-4
Model number indication....3-3

N

NX bus connector....3-2
NX Object....A-28

O

Object name....A-28

P

Periodic Inspection Item....9-2
Preventing Incorrect Attachment....4-16
Protrusions for removing the Unit....3-2

R

refresh cycle of the NX bus....5-2, 5-3
Release hole....3-8
ring counter....7-26

S

Securing Wires....4-11
Slave Terminal....1-6
Solid Wire....4-8
Subindex....A-28

T

Terminal block....3-2
Terminal Blocks....3-8
Terminal hole....3-8
Terminal number indication....3-8
Twisted Wire....4-8

U

Unit....A-28
Unit hookup guide....3-2
Unit Information Object....A-28
Unit Power Supplies....4-3
Unit specifications....3-2
Update Timing....6-38

W

Wiring Terminal.....4-6

OMRON Corporation **Industrial Automation Company**

Kyoto, JAPAN **Contact : www.ia.omron.com**

Regional Headquarters

OMRON EUROPE B.V.
Wegalaan 67-69, 2132 JD Hoofddorp
The Netherlands
Tel: (31) 2356-81-300 Fax: (31) 2356-81-388

OMRON ELECTRONICS LLC
2895 Greenspoint Parkway, Suite 200
Hoffman Estates, IL 60169 U.S.A.
Tel: (1) 847-843-7900 Fax: (1) 847-843-7787

OMRON ASIA PACIFIC PTE. LTD.
438B Alexandra Road, #08-01/02 Alexandra
Technopark, Singapore 119968
Tel: (65) 6835-3011 Fax: (65) 6835-3011

OMRON (CHINA) CO., LTD.
Room 2211, Bank of China Tower,
200 Yin Cheng Zhong Road,
PuDong New Area, Shanghai, 200120, China
Tel: (86) 21-6023-0333 Fax: (86) 21-5037-2388

Authorized Distributor:

©OMRON Corporation 2025–2026 All Rights Reserved.
In the interest of product improvement,
specifications are subject to change without notice.

Cat. No. W647-E1-02 1026